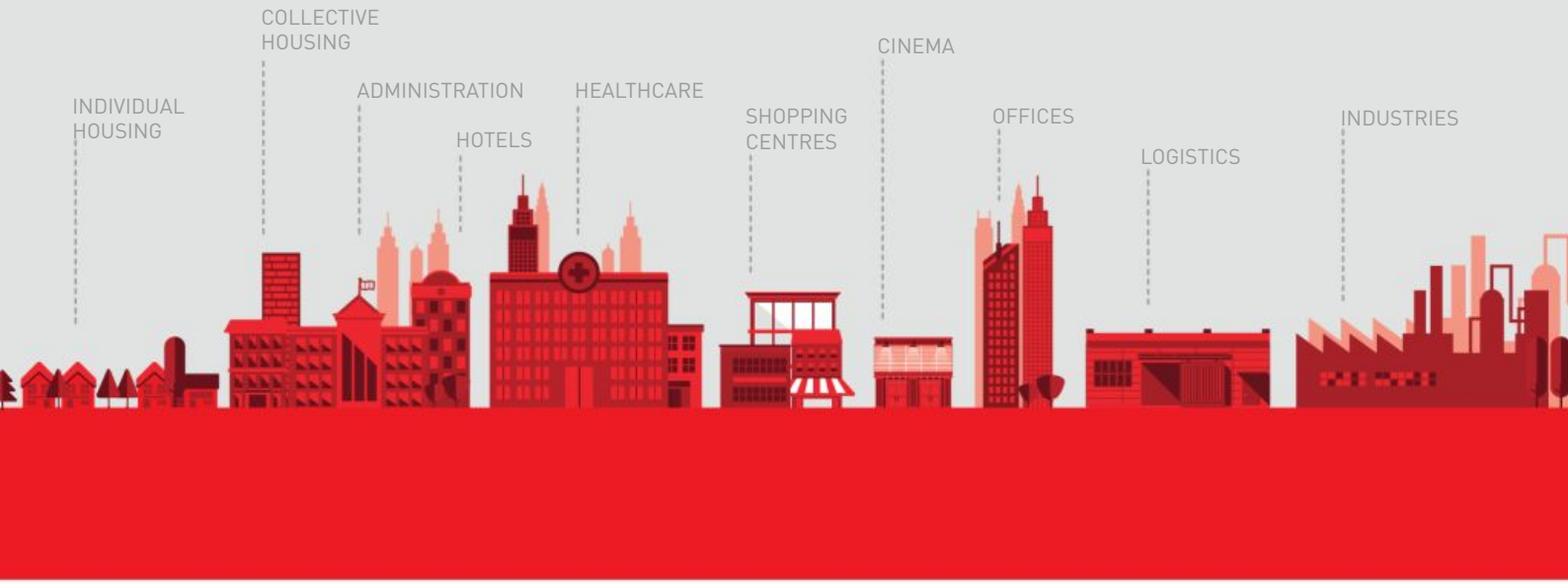

CATALOGUE 2019-2020

PRODUCTS & SYSTEM SOLUTIONS

CIAT

. . f

CONTENTS

AEROFRESH P.289
AIR COMPACT P.421
AIRCLEAN P.451
AIRTECH P.447
AQUACIAT^{CALEO} TD P.83
AQUACIAT LD/ ILD P.67
AQUACIAT^{POWER} ILD ST / ILD HE P.121
AQUACIAT^{POWER} LD ST / LD HE P.97
AQUAIR BCP P.497
AQUAIR PREMIUM BCP P.491
BOSS SUPERVISION P.603
CIAT M2M P.203
CIATCONTROL P.415
CIATCOOLER LP P.191
CLIMACIAT P.433
COADIS LINE 600 ..... P.315
COADIS LINE 900 ..... P.327
COMFORT LINE P.359
COMFORT UNIT CONTROLS P.383
CONDENCIAT CD P.295
CONDENCIAT CL 2 ..... P.291
CZ P.589
DYNACIAT LG P.209
DYNACIAT LGN P.169
DYNACIAT^{POWER} LG P.225
DYNACIAT^{POWER} LGN P.183
ENERGY OPTIMISATION SOLUTIONS P.287
EPURE DYNAMICS P.411
EREBA 17-21 ..... P.55
EREBA ACCESS P.43
EREBA HE P.29
EXPAIR P.471
FLOWAY P.425
FRESH AIR CONTROL P.405
HELIOTHERME 4000 ..... P.455
HYDROCIAT LW ST / LW HE P.233
HYDROCIAT^{TURBO} LWT P.261
HYSYS, THE HYDRAULIC SOLUTION P.407
HYSYS, THE AERAULIC SOLUTION P.409
HYSYS, THE INTELLIGENT SOLUTION P.411
ISPK P.565
ITEX P.303
JUNIOR BCP P.485
MAGISTER P.479
MAJOR LINE P.343
MELODY2 ..... P.335
NEPTUS XP P.595
OPERA P.277
PLANTWATCH PRO3 ..... P.607
POWER'CONTROL P.201
POWERCIAT LX ST / LX HE / LX XE P.141
SC P.577
SPACE AQUA XF P.555
SPACE PF3 415-1200 ..... P.537
THERMAL ENERGY STORAGE P.309
V30 ..... P.393
V300 ..... P.397
V3000 KNX P.401
VECTIOS P.507
VEXTRA P.283

PEFC
PEFC/14-38-00020

This catalogue presents the key characteristics and selection data of our products and systems. The detailed technical manuals are available from the Professionals section of our website www.ciat.com

HEAT PUMPS **WATER CHILLERS**	Air-cooled units Water-cooled units
DRYCOOLERS - CONDENSERS **HEAT EXCHANGERS** **THERMAL ENERGY STORAGE**	Drycoolers - Condensers Condensing units Heat exchangers
COMFORT UNITS **HYSYS® SYSTEM**	Cassettes - Fan coil units Ductable units - Diffusers Comfort unit control
AIR TREATMENT SOLUTIONS	Air handling units Air heaters - Close control units Swimming pool dehumidifiers
ROOFTOP REVERSIBLE AIR-TO-AIR AND WATER-TO-AIR	Rooftop units - Air condensed split and packaged systems - Water-sourced heat pumps - CIAT system control and supervision

CIAT A GLOBAL SYSTEM PROVIDER

With over 80 years of experience, CIAT is one of Europe's leading names in heating, air conditioning and air handling solutions for the commercial, residential, healthcare and industrial sectors. Renowned for our capacity to create innovative, durable and high-performing products, we offer a complete range of equipment that is designed to work together. The skills and expertise of our teams are backed by completely integrated powerful production facilities which enables us to guarantee the optimal development of our global system solutions. Our latest innovations have been specially designed to meet your most demanding requirements and provide you with the best in technology.

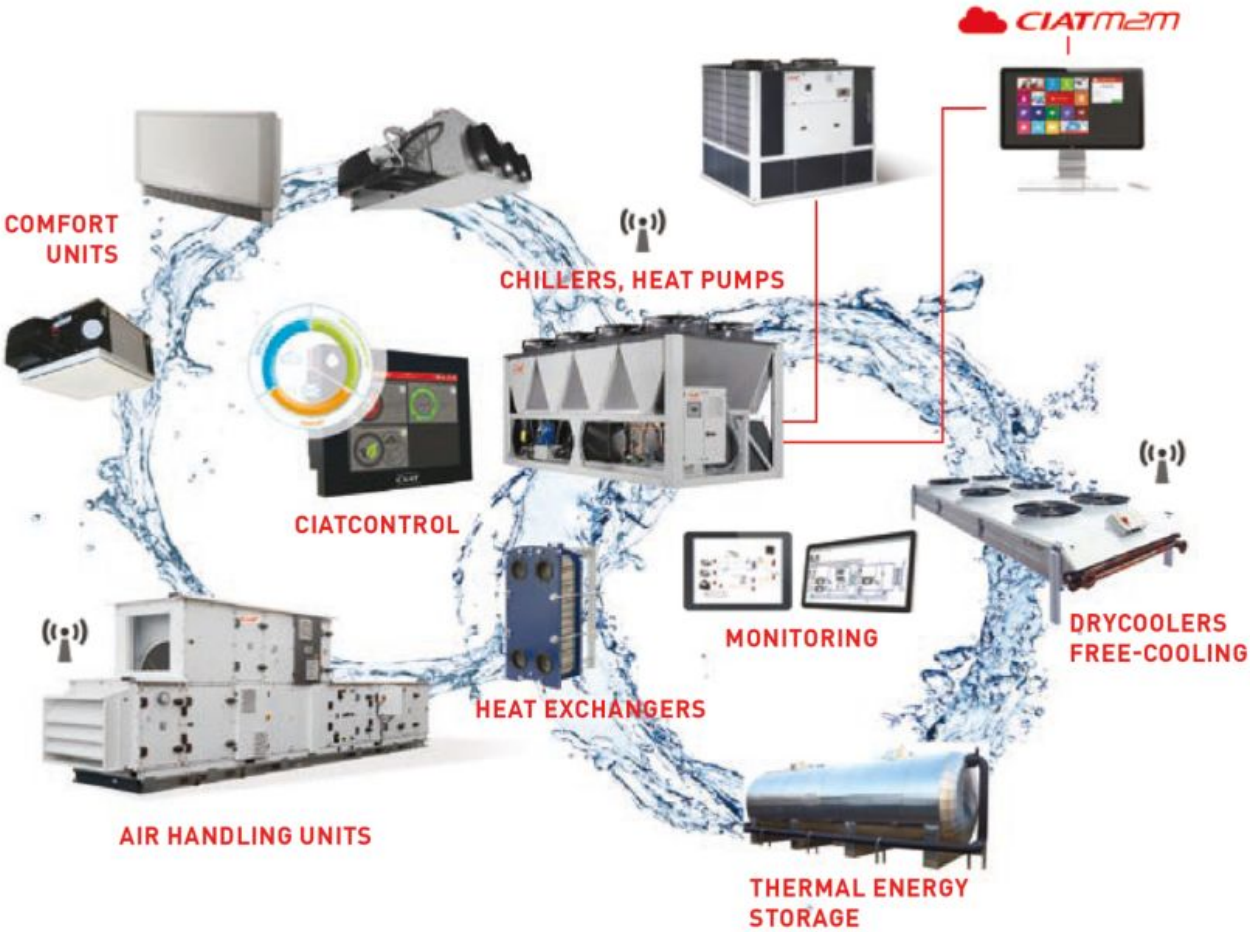

CIAT COMMITMENTS THAT **CONSTITUTE EXCELLENCE**

Construction standards are increasingly stringent and buildings must be designed not only with the comfort of occupants in mind, but also with the aim to protect their health equity while reducing energy consumption and environmental impacts. CIAT responds by a constant commitment to offer more than just an extensive product range; we provide a comprehensive system offer developed around three fundamental values:

Indoor Air Quality

CIAT is committed to the research and development of innovative solutions aimed at improving indoor air quality, a major health issue of critical importance in the design of buildings. By integrating dynamic purification systems, particulate and chemical sensors and increased filter efficiency into its equipment, CIAT helps control CO_2 and fine particle concentration, achieving an air quality as close as possible to the recommended threshold defined by the World Health Organisation.

Comfort

CIAT designs and manufactures products and systems with the well-being of occupants in mind. By developing equipment that provides the best possible thermal, aeraulic and acoustic comfort, we put individuals at the heart of our strategy and create interior environments that are renowned for their quality. Our comfort units ensure minimised temperature fluctuations, quiet operation and better visual integration, providing optimal comfort at all times.

Energy Optimisation

CIAT develops products with a constant concern for performance. Our thermodynamic equipment meets the highest standards in energy use classification (class A) allowing substantial savings to be made without compromising on performance and efficiency. Heat recovery and thermal energy storage units harness calories that would otherwise be wasted, thereby using less energy and contributing to the reduction of greenhouse gases.

SPECIFICATIONS

SOLUTIONS

INDUSTRIAL FACILITIES

INSTALLATION

SERVICE

SUPPORT THROUGHOUT **YOUR PROJECT**

CIAT makes a long-term commitment as a partner by your side: from the specifications stage right through to installing the equipment, experts analyse your requirements to provide you with the best possible solution.

The integrated engineering department, the ultramodern research and design centre and the cutting-edge industrial facilities, from which we manage the entire production process, allow us to adapt to your specific needs.

CIAT's activities are based on optimising energy consumption levels and improving air quality and occupant comfort in buildings. We provide sustainable systems and highly advanced equipment that meet stringent certifications and standards. We are also strongly committed to protecting the environment, which is a fundamental part of our development strategy

WORLD-CLASS OPERATIONS
OPERATIONS TO BRING BEST-IN-CLASS SOLUTIONS

Our European Centers of Excellence and production sites are all wolrd-class facilities in their own right. Each center focuses on a specific field of expertise to support our customers in meeting the challenges they face today.

CULOZ CENTER OF EXCELLENCE FOR AIRSIDE TECHNOLOGIES

Equipped with state-of-the-art development, test and measurement tools, teams of experts at the Culoz site carry out prototyping and testing for customers who are looking for the best in innovation in air handling units, fan coil units and heat exchangers.

MONTILLA CENTER OF EXCELLENCE FOR ROOFTOPS AND PACKAGED SOLUTIONS

The teams in southern Spain have in-depth expertise in rooftop, packaged, dehumidifier and preconditioned air (PCA) for aircraft units. The center houses the largest HVAC factory in Spain and Europe's biggest laboratory for aircraft preconditioned air units.

MONTLUEL CENTER OF EXCELLENCE FOR CHILLER AND HEAT PUMP TECHNOLOGIES

Experts at the Montluel site draw on over 50 years of specialist knowledge and engineering skills to offer customers tailor-made solutions to meet their individual needs in chiller and heat pump innovation.

VENCE CENTER OF EXCELLENCE FOR CLIMATE CONTROL SYSTEMS

Providing climate control systems for HVAC environments is the key activity at the Vence Center of Excellence. Here the engineering team develops cutting-edge solutions to optimise and improve the energy efficiency of HVAC systems.

CULOZ

Air Handling Units,
Terminal Fan Coils & Heat Exchangers

MONTLUEL

Chillers and Heat Pumps

VENCE

Energy Management Climate
Control Systems

MONTILLA

Rooftop & Packaged Units

R&D Center & Laboratory

Production Sites

CIAT EXPERT IN INDOOR CLIMATE SYSTEMS

As a pioneer of customised HVAC solutions, CIAT understands the importance of increasing the well-being of individuals in their living areas and places of work. Aware of the thermal, energy and air quality issues faced today by every sector of activity, we have responded by developing global systems based on an adapted and efficient combination of products.

WATER-BASED **GLOBAL ENERGY SYSTEMS** FOR HEATING, COOLING AND INDOOR AIR QUALITY

To comply effectively with today's thermal and environmental regulations, CIAT designs optimised water-loop energy systems comprised of comfort units, heat pumps and dual-flow air handling units. As a renewable resource and a highly effective heat transfer fluid, water not only represents an excellent alternative to direct expansion systems it also meets F-Gas regulations in terms of confinement and limitation of refrigerants within buildings.

BENEFITS OF THE WATER LOOP

- **More competitive:** equipment that is more cost effective and requires less maintenance than direct expansion systems
- **Greater comfort:** flexible, precise control of comfort for the occupants
- **Increased energy efficiency:** homogenous and thermally stable, water reduces the energy requirements for heat transfer
- **Environmentally sustainable:** no refrigerant is required on the premises and only a small amount is used in the heat pump installed outside the building's occupied areas
- **Easy to install:** no refrigerant specialists are required during installation
- **Flexibility:** a water-loop energy system adapts easily to the design of buildings and the changes that may be made to its layout over time

SMART CIATControl: THE ENERGY MANAGEMENT SYSTEM

Connected to all HVAC components (refrigeration, comfort units, air handling unit) and using a patented algorithm that can be programmed according to building occupancy and weather conditions, Smart CIATControl adapts the efficiency of the thermodynamic producer to the needs of the emitters in real time.

In addition to automatic system changeover based on calculation requirements, features include:

- **Optimal Stop & Start:** predictive function which anticipates the stop and start times of the HVAC system.
- **Optimal Water®:** allows the temperature of the chiller or heat pump to be controlled according to the demand from the emitters.
- **Night cooling:** charges the building with fresh air during the night and delays the activation of the refrigeration request during the day.
- **Epure Dynamics:** patented process which ensures a particulate level for the building that is beneath the fixed WHO recommendation of 10µg/m³.

The optimizations offered by Smart CIATControl allow **energy saving for the building**

COMPLIANCE WITH STANDARDS AND RESPECT FOR THE ENVIRONMENT

CIAT pursues an exemplary quality approach to developing sustainable and efficient systems which conform to the standards of today and anticipate those of tomorrow. We ensure that our developments conform to the various environmental directives and regulations and, as a real driving force in our sector, also participate in their implementation.

THE **ENERGY-RELATED PRODUCTS (ERP)** EUROPEAN DIRECTIVE

The European Directive 2009/125/CE ErP outlines the conditions and criteria relating to the eco-design of products that affect energy consumption throughout their life cycle, from manufacture, to use and until disposal at end of life. It encourages manufacturers to design products that improve energy efficiency while reducing their overall impact on the environment, in particular the resources consumed throughout their service life. All CIAT products included in our catalogue conform with the ErP directive.

F-GAS REGULATIONS

Since 1 January 2015, the measures to control emissions from fluorinated greenhouse gases have been strengthened and a number of far-reaching changes have been introduced with a view to cutting the EU's F-Gas emissions by two-thirds by 2030 compared with 2014 levels.

These directives have a direct impact on HVAC equipment and involve the implementation of appropriate solutions. Direct expansion systems are destined to disappear as technological choices increasingly turn to water-based solutions which confine small amounts of refrigerant to a limited part of the installation.

ECO-DESIGN: RESULTS THAT EXCEED THE REGULATORY REQUIREMENTS OF TOMORROW, TODAY

At CIAT we strive to reduce the ecological impact of our equipment throughout its life cycle, from creation to final decommissioning. We confirm this strong environmental policy in our commitment to respecting ISO 14001 and OHSAS 18001 certifications, and undertake:

- **To integrate environmental aspects as early as possible in the product design process;**
- **To take into account and make available the results of the life cycle analyses (LCA) for products (complete system for heating, ventilation and cooling);**
- **To provide environmental reports related to the equipment.**

This approach benefits from an internationally recognised standard ISO 14062 "Environmental Management - integrating environmental aspects into product design and product development".

SERVICE SOLUTIONS

CIAT AT YOUR SERVICE FOR YOUR COMFORT, AIR QUALITY & ENERGY OPTIMISATION

As key European player for HVAC systems, our objective is to provide high quality service and develop partnerships with you throughout the lifecycle of your installations. We understand your changing needs, develop smart services and energy solutions for all types of applications that optimise performance and enable savings.

Committed to improve life quality, we provide the support you need to get the most out of your solution and develop strong partnerships with our customers, from project analysis to commissioning and operation for long-term satisfaction.

A WHOLE WORLD OF SERVICES

MAINTENANCE:
- Warranties and extensions
- Preventive and corrective
- Service contracts

REPAIRS:
- Efficient diagnostics
- Quick on-site interventions
- Technical assistance

CONTROL AND MONITORING:
- Real-time data, alerts and reports
- Monitoring and optimizing performance
- Prognosis and expert analysis

SPARE PARTS:
- Universal and Factory Authorized Parts
- Consultancy and kit solutions
- Dedicated on-line shop

MODERNIZATION:
- Upgraded installation
- Performance improved
- Turnkey projects

THERMAL ENERGY STORAGE:
- For peak cooling demand >500 kW
- Shift electricity consumptions from peak to off peak hours

CIATM2M:

OPTIMISE HVAC OPERATION & MAINTENANCE NEEDS ALERTS, REAL-TIME DATA & REPORTS WITH EXPERT ANALYSIS DATA ARE REGULARLY REVIEWED THROUGH CONTINUOUS SUPPORT

In the current context of increasingly efficient building requirements, CIAT offers monitored services that help customers to improve the efficiency of their HVAC installations.

CIATM2M is an advanced monitoring solution, which enables customers for all applications to track and monitor their CIAT equipment.
- Real-time data retrieve through a custom access to the CIATM2M website (synoptic, controller dashboard, event and temperature curve, alert & fault memory and parameters log)
- Email alert at any event on the equipment
- Monthly and annual reports with analysis and recommendations from CIAT experts.

- ⊕ **Better profitability**
- ⊕ **Equipment availability**
- ⊕ **Steady indoor air quality**
- ⊕ **Optimal equipment control**
- ⊕ **Fully secured connection**

HVAC EXPERTS CLOSE AT HAND

A COMBINATION OF KNOWLEDGE AND EXPERIENCE FOR BETTER TECHNICAL SUPPORT

Our qualified and responsive teams of technicians are available to implement actions on site and ensure optimal operation of your equipment. Thanks to our expertise and experience in the fields of maintenance and technical service, CIAT offers a wide range of services from pre-sales technical support and diagnostics right through to energy audits.

Our dedicated hotline for off-site support with our engineers and technicians on the field, work hand in hand to meet your expectations in terms of energy efficiency. Our priority, 24/7: to allow you to focus on your business whilst CIAT provides you with the best possible level of service.

+60 SERVICE TECHNICIANS | A LARGE RANGE OF UNITS UNDER SERVICE CONTRACTS | CONTINUOUS TRAINING FOR TEAMS & CUSTOMERS

HVAC EUROPE PARTS CENTER

BUILDING SERVICE EXCELLENCE FOR CUSTOMERS

Thanks to our dedicated parts team and our factories located throughout Europe, HVAC Europe Parts Center is able to deliver 250 orders daily and ship efficiently around the world. With more than 37,000 active parts and 10,000 items in stock, we propose a comprehensive parts offer including compressors, universal parts and manufactured components. Our purchasing power ensures optimised pricing and leadtimes. Thanks to our manufacturing expertise, we provide advice to help you find the best service solution to meet your specific needs.

- State-of-the art logistics with reliable next day delivery for Europe
- Storage permanently adjusted according to customer demand
- Dedicated, accessible and reactive teams
- Dedicated online shop to facilitate parts selection
- Stock online, order tracking, parts selection: numerous specific online tools to ease and fasten your business

+80.000 MANAGED PARTS NUMBER | STRONG SUPPLY CHAIN | **98%** DELIVERIES ON TIME

VENCE CLIMATE CONTROL SYSTEMS CENTER OF EXCELLENCE

Expert in customized control solutions, smart services for HVAC systems and plant room.

At the Vence Center of Excellence for Climate Control Systems, our engineers focus on developing and offering technical support for smart services and designing, engineering and implementing HVAC systems with storage solutions.

Their know-how is proven and unique with in-depth knowledge of both cooling/heating and automation. The Vence centre works closely with Europe's leading science park located in Sophia-Antipolis, in the south of France. The team is frequently involved in major European research and innovation projects.

CONNECTED SERVICES AND ENERGY OPTIMIZATION

- Monitoring
- Equipment control
- Plant and system management
- Climate control solutions compatible with every Building Management System

+1 300 CONNECTED EQUIPMENT

+500 MW ELECTRICITY SAVED

+6 000 000 kWh DAILY TRANSFER

MARKETS SOLUTIONS

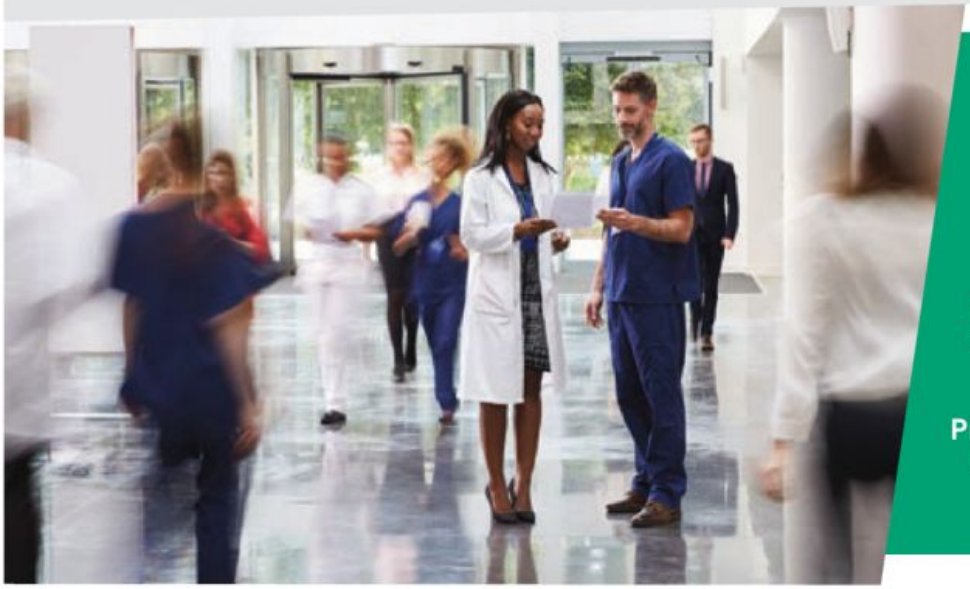

HEALTHCARE

Control of airborne contamination and noise levels in risk zones.

Protection of health and comfort in reception areas and patient rooms.

CLIMACIAT AIRCLEAN

Air handling unit designed for the specific characteristics of controlled environments

Certified Eurovent DIN 1946-4 /VDI 6022.

COADIS LINE

Cassette comfort unit with Coanda effect for increased occupants' comfort.

COMFORT LINE

Ductable comfort units with excellent acoustic comfort and Epure Dynamics technologies for air purification.

EPURE DYNAMICS

Smart CIAT control air purification function for higher quality indoor air, specifically through purification on fine particles in accordance with WHO recommendations.

POWERCIAT

High efficiency air-coled chiller with noise reduction technologies.

THERMAL ENERGY STORAGE

Non-stop support and reduced operating cost.

POWER' CONTROL

Plant system management designed to control a complete thermal energy production system (heating wand cooling).

HOTEL

Comfort, silence and discretion for the satisfaction of your clients.

Controlled running costs.

MAJOR LINE

Versatile and highly efficient comfort unit providing improved comfort and very low sound level.

COMFORT LINE

Comfort unit with high available static pressure, modular air discharge configurations, flexible installation and excellent acoustic comfort.

AQUACIAT

High efficiency air-cooled chiller with scroll compressor.

DYNACIAT

Compact and silent High energy efficiency Scroll compressors
High-efficiency brazed-plate heat exchangers
Self-adjusting electronic control.

OPERA

Drycooler range compatible with Dynaciat range for favourable all-round performance levels.

CLIMACIAT AIRACCESS

Accessible and efficient air handling unit that is simple to install and use.

SHOPPING CENTERS

Full modularity with plug and play system.

Optimized operating costs.

VECTIOS

Rooftop unit. All-in-one air conditioning solution, with flexible configuation, designed both to offer high levels of indoor air quality and high efficiency reducing total cost of onership during its lifetime.

AQUACIAT POWER

High efficiency air-cooled chiller & heat pump with noise reduction technologies and integrated hydraulic module.

HYDROCIAT

Compact and reliable water-cooled chiller.

VEXTRA

Compact drycooler unit working with Hydrociat for an optimised global solution.

CLIMACIAT AIRTECH

Accessible and efficient air handling unit that is simple to install and use.

COADIS LINE

Cassette comfort unit with Coanda effect for increased occupants' comfort.

MELODY 2

Optimum heating and cooling performance cassette, designed for perfect integration in suspended ceiling.

THERMAL ENERGY STORAGE

Reduced operating cost and non-stop support.

LIGHT COMMERCIAL

Comprehensive solutions and guaranteed services for building managers' peace of mind.

Simplicity and ideal comfort for building occupants.

EREBA HE

Simplicity and reliability in a high efficiency heat pump, with integrated hydraulic module and NHC controls.

AQUACIAT

Compact and silent heat pump with integrated hydraulic module.

FLOWAY

Compact air handling unit leading in its category in terms of ease of use, Ecodesign and energy efficiency.

MAJOR LINE

Versatile and highly efficient comfort unit providing improved comfort and very low sound level.

MELODY2

Optimum heating and cooling performance cassette, designed for perfect integration in suspended ceiling.

MARKETS SOLUTIONS

OFFICES

Thermal and **accoustic comfort.**

High interior air quality for improved productivity.

AQUACIAT POWER

High efficiency air-cooled chiller with scroll compressor.

DYNACIAT POWER

High energy performance water-cooled chiller with optimised footprint.

EPURE DYNAMICS

Smart CIAT control air purification function for higher quality indoor air, specifically through purification on fine particles in accordance with WHO recommendations.

ITEX

High thermal transfer capacity gasketed plate heat exchanger.

CLIMACIAT AIRACCESS

Accessible and efficient air handling unit that is simple to install and use.

COADIS LINE

Cassette comfort unit with Coanda effect for increased occupants' comfort.

COMFORT LINE

Ductable comfort units with excellent acoustic comfort and Epure Dynamics technologies for air purification

SMART CIATCONTROL

Energy management system allowing for centralization of the information, remote management of equipment, automatic changeover and enhanced energy optimization

INDUSTRY

High efficiency and full reliability for industrial equipment and global process.

Risk control with ATEX certified heating (air heaters), ventilation, air handling and smoke extraction equipment.

POWERCIAT

High efficiency air-cooled chiller with heat recovery.

HYDROCIAT TURBO

Highly efficient, compact and flexible water-cooled chillers equipped with a Maglev (Magnetic levitation) centrifugal two stage compressor.

VEXTRA

Compact drycooler unit working with Hydrociat for an optimised global solution.

CLIMACIAT AIRTECH

Air handling unit combining efficiency and modularity to meet technical requirements.

VECTIOS

Rooftop unit. All-in-one air conditioning solution, with flexible configuation, designed both to offer high levels of indoor air quality and high efficiency reducing total cost of onership during its lifetime.

SPACE PF

Rooftop unit. Extensive capacity range. Active or passive recovery option available. Quiet operation. Flexible configuration and adapted for renovation Scroll compressor with R410A.

POWER' CONTROL

Plant system management designed to control a complete thermal energy production system (heating and cooling).

THERMAL ENERGY STORAGE

Reduced operating cost and non-stop support.

HEAT PUMPS & WATER CHILLERS

AIR-COOLED UNITS p.29

EREBA HE

Easy and fast installation
Hydraulic module available
Inverter technology
compressor and fans.

4 to 15kW
4 to 17kW

Page 29

EREBA ACCESS

Scroll compressors.
Wide range for cooling only
and reversible unit.
Integrated hydraulic module.
Lead/ lag operation.

17 to 40kW
17 to 40kW

Page 43

EREBA 17-21

Inverter technology.
Cooling only and reversible
unit Integrated hydraulic
module. Lead/ lag operation.

15 to 18kW
17 to 21kW

Page 55

CIATCOOLER LP

Scroll compressors.
R410A refrigerant.
Compact, ultra-quiet design.
The air conditioning solution
for locations where outdoor
installation is impossible.

18 to 192 kW

Page 191

AQUACIAT CALEO TD

Designed to replace
conventional boilers.
High temperature
hot water (+65°C).
Winter operation (-20°C).
High energy efficiency.
Compact and quiet.
Condenserless unit.

25 à 1 02 kW

Page 83

AQUACIAT LD / ILD

Compact and silent.
Scroll compressors.
High efficiency brazed-
plate heat exchangers.
All-aluminium micro-
channel condenser.
Self-adjusting electronic
control.

LD: 40 to 156kW
ILD: 38 to 148kW
42 to 150kW

Page 67

R-32
Available in 2020

Cooling Heating

CONTROL AND SUPERVISION p.201

POWER'CONTROL

Plant system management.
Designed to control a complete thermal energy production system (heating and cooling).

Energy optimization for HVAC systems

CIATM2M

To track, monitor hvac system performance & take preventive and corrective actions remotely.

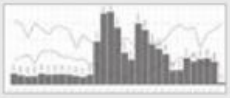

Monitoring solution for CIAT equipment

PRODUCT RANGE OVERVIEW

AQUACIAT POWER LD / ILD

Energy excellence.
Compact and silent.
Scroll compressors.
High efficiency brazed-plate heat exchangers.
All-aluminium micro-channel condenser. Self-adjusting electronic control.

LD: 168 to 740kW
ILD: 156 to 511kW
173 to 537kW

Page 67

R-32
Available in 2020

POWERCIAT LX

273 to 1493kW

Compact and reliable.
3 efficiency versions.
Screw compressors.
All-aluminum micro-channel condenser.
Self-adjusting electronic control.
Touch screen control interface.

Page 141

DYNACIAT LGN

High energy efficiency.
Compact and quiet.
Scroll compressors.
Brazed-plate heat exchangers.
Self-adjusting electronic control. Condenserless unit.

23 to 175kW

Page 169

DYNACIAT POWER LGN

High energy efficiency.
Compact and quiet.
Scroll compressors.
High-efficiency brazed-plate heat exchangers.
CIAT self-adjusting electronic control.
Condenserless unit.

200 to 450kW

Page 183

OFFICES | ADMINISTRATION | SHOPPING CENTRES | HEALTHCARE | INDUSTRIES | HOTELS

HEAT PUMPS & WATER CHILLERS

WATER-COOLED UNITS p.209

DYNACIAT LG

Compact and silent.
High energy efficiency.
Scroll compressors.
High-efficiency brazed-plate heat exchangers.
Self-adjusting electronic control.

25 to 190kW

29 to 230kW

Page 209

DYNACIAT POWER

220 to 720kW

250 to 820kW

High energy efficiency.
Compact and quiet.
Scroll compressors.
High-efficiency brazed-plate heat exchangers.
CIAT self-adjusting electronic control.

Page 225

HYDROCIAT LW

273 to 1756kW

317 to 1989kW

Compact and reliable.
Standard and High Efficiency versions.
Screw compressors.
Flooded shell and tubes evaporator.
Self-adjusting electronic control.
Touch screen control interface.

Page 233

HYDROCIAT TURBO LWT

550 to 1600kW

650 to 1875kW

Compact and reliable.
Premium efficiency.
Oil free centrifugal compressor with magnetic levitation.
Flooded shell and tubes evaporator.
Self-adjusting electronic control.
Touch screen control interface.

Page 261

Cooling Heating

DRYCOOLERS - CONDENSERS - HEAT EXCHANGERS - THERMAL ENERGY STORAGE

ENERGY OPTIMISATION SOLUTIONS

Page 287

Optimised energy management.
Information in multilingual clear text.

THERMAL ENERGY STORAGE

Page 309

Shift your electricity consumption from peak to off peak hours:
- Turnkey solution
- Proven technology
- Unique expertise
- Reduced operating cost
- Non-stop support to
- Smart grid ready secure cooling production.

PRODUCT RANGE OVERVIEW

DRYCOOLERS & CONDENSERS

OPERA

up to 1 100 kW

MORE
More efficient
More flexible
More intelligent

FOR

LESS
Less energy
Less time
Less noise

Page 277

VEXTRA

up to 1 900 kW

Slim design and acoustic comfort.
Saves up to 40% floor space.

Page 283

AEROFRESH

Adiabatic cooling system.
Alternative to cooling towers.
Smaller units.

Page 289

CONDENSING UNITS

CONDENCIAT CL2

Outdoor condensing unit for direct expansion applications.
Variable speed propeller fan.

6.8 to 18.6 kW

Page 291

CONDENCIAT CD

Quiet operation.
Low speed fan.
All year round operation.

40 to 161 kW

Page 295

HEAT EXCHANGERS

ITEX

Liquid / Liquid heat exchangers.
Benefit from a high thermal transfer capacity.
Particularly well suited to low temperature differences between the two fluids.

Page 303

OFFICES ADMINISTRATION SHOPPING CENTRES HEALTHCARE INDUSTRIES HOTELS

COMFORT UNITS p.315

COADIS LINE 600

1 to 5kW

1.7 to 6kW

Page 315

COADIS LINE 900

3 to 10kW

3 to 9kW

Page 327

MELODY2

1.5 to 8.7kW

1.3 to 11.6kW

Page 335

MAJOR LINE

0.7 to 8.5kW

0.9 to 9kW

Page 343

COMFORT LINE

0.7 to 14kW

0.7 to 17kW

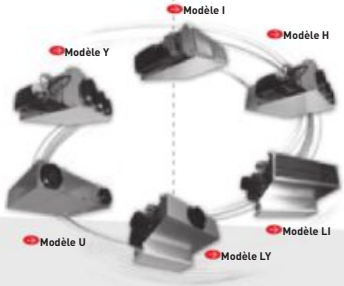

Page 359

Cooling Heating

CONTROL FOR COMFORT UNITS p.383

V30

Customised performance at minimum cost.

Electronic control V30

V3000 KNX

New generation networked control.
Variable flow HEE function control.
Condensation-free function management.
CIAT Concept & Design. EuBac certification.

Electronic control V3000 KNX

V300

Simplified access with the Master/Slave function.
4 operating modes: complies with RT 2012.
Quick and easy to upgrade on site.
Centralised timer for managing multiple zones.
CIAT concept and design.
EuBac certification.

Electronic control V300

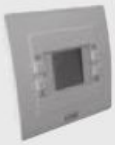

FRESH AIR CONTROL

Energy saving and optimal air quality in office buildings.

Fresh air control

HYSYS® THE SYSTEM SOLUTION ON WATER LOOP p.407

HYSYS®: THE HYDRAULIC SOLUTION WITH HYMOD

The hydraulic solution which adapts itself to your requirements and guarantees optimum levels of comfort and performance.

- Modular decoupling
- Variable water flow rate
- Variable water temperature (Optimal Water®)
- Network balancing

HYSYS®: THE AERAULIC SOLUTION

Guaranteeing high quality indoor air, specifically through purification of fine particles in accordance with WHO recommendations.

- Monitor the air renewal according to the occupancy
- Monitor the levels of fine particles (Epure Dynamics®)

HYSYS®: THE INTELLIGENT SOLUTION

Management of your installation together with energy optimisation, and the setting of parameters via an intuitive interface, simplifying your day-to-day usage.

- SMART CIATControl (System tracking and optimisation)
- EASY CIATControl (Managing and programming comfort units)

SYSTEM CONTROL p.415

SMART CIATCONTROL

Optimisation of Hysys® system performance:
- Centralisation of the information,
- Remote management of equipment,
- Automatic changeover,
- Enhanced energy optimisation,
- Air quality optimisation function.

Smart CIAT Control: Energy Management System

OFFICES | ADMINISTRATION | SHOPPING CENTRES | HEALTHCARE | INDUSTRIES | HOTELS

AIR TREATMENT SOLUTIONS

AIR HANDLING UNITS p.421

AIR HEATER p.455

AIR COMPACT

The modular and ultra-slim AHU to guarantee perfect solution Ideal for a compact installation. Available in single and dual flow vertical, ceiling or floor mounted versions.

up to 6 000 m³/h

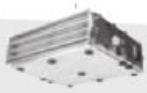

Page 421

FLOWAY

All range class A+.
High-efficiency heat recovery unit.
High performance direct drive EC fan motor assembly.
Plug & play unit (built-in control).

500 to 18 000 m³/h

Page 425

CLIMACIAT

AHU for all applications. Designed to meet the EN 13053 and EN 1886 standards. The effective solution for service sector, industry and healthcare applications.

1 000 to 30 000 m³/h

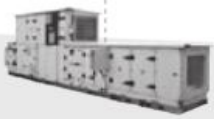

Page 433

AIRTECH

AHU designed for all types of applications. Thanks to the extraordinary modularity, it allows multiple configurations and installations, both indoor and outdoor.

1 000 to 66 000 m³/h

Page 447

AIRCLEAN

AHU designed for specifically controlled environments .This range incorporates latest hygienic technological solutions.

1 000 to 60 000 m³/h

Page 451

HELIOTHERME 4000

The most competitively priced technical solution for heating large spaces.
Ensures ultra-fast warm-up of buildings.
Excellent diffusion thanks to the double deflection diffuser with its patented JET+ technology.
New low energy consumption HEE motor version.
New 3-speed thermostat for HEE motor.

Page 455

Cooling

F = Air flow in m³/h

CLOSE CONTROL UNITS p.471

EXPAIR

Reducted footprint.
Dual-wall construction.
PLC control.
Variable speed condenser fan.

5 to 50kW

1 000 to 12 000 m³/h

Page 471

MAGISTER

Extensive range of chilled water or direct expansion systems.
Compact and attractive design.
Energy savings with EC motor. and self-regulating control
Easy to install.

10 to 116kW

3 000 to 27 500 m³/h

Page 479

SWIMMING POOL DEHUMIDIFIERS p.485

JUNIOR BCP

Excellent functions/price ratio.
Low energy consumption.
Energy recovery.
Control as standard.
Optional DUAL version.
Double-walled conception.

4 to 15kg water/h

Page 485

AQUAIR BCP

Single or dual flow.
Optimised energy consumption.
Energy recovery.
Electronic control as standard.
Modular and double-walled conception.
Optional DUAL and AERO versions.

22 to 74kg water/h

Page 497

AQUAIR PREMIUM BCP

Electronic control.
Optimised energy consumption.
Scroll and R-410A compressors.
EC plug fan with HE motor.
Heating and dehumidification of covered pools.

56 to 74kg water/h

Page 491

Dehumidification capacity

OFFICES ADMINISTRATION SHOPPING CENTRES HEALTHCARE INDUSTRIES HOTELS

ROOFTOP REVERSIBLE AIR-TO-AIR AND WATER-TO-AIR

ROOFTOP UNITS p.507

VECTIOS™ PJ

Integrated "plug&play" system. Eco-Design ready ErP 2021. High seasonal efficiency: scroll compressors in tandem, EC fans, EEV. Reliability with superior quality. Low refrigerant charge R-410A. Optimized dimensions and weights. New intelligent control concept. Active and passive recovery. Air zoning option (up to 4 different zones) and other key feature options.

22.5 to 91.2kW

20 to 90.1kW

5 100 to 16 000 m³/h

Page 507

SPACE PF

Packaged unit all in one. Large capacity range. Scroll compressors in tandem, EC fans. Active or passive recovery options. Configuration flexibility. R-410A refrigerant.

93 to 281 kW

99 to 293 kW

14 400 to 50 600 m³/h

Page 537

SPACE AQUA XF

Rooftop water cooled for centralized systems with closed water loop. Applicable also for geothermal installations. Configuration flexibility. High efficiency. SEER > 5.6; SCOP > 4.4 in configurations with tandem and supply EC plug-fan. Silent operation. R-410A refrigerant..

107 to 183 kW

122 to 227 kW

14 400 to 36 600 m³/h

Page 555

Cooling Heating F = Air flow in m³/h

CIAT SYSTEM CONTROL AND SUPERVISION p.603

BOSS SUPERVISION

Remote control, managing up to 300 units (3500 variables). Alarm management, planner and event management, diagrams and reports. Installation drawing with units located, energy mangement, analysis of risks and critical control points, notes and integrated WiFi.

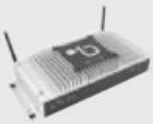

PLANTWATCH PRO3

Management of up to 30 units (with a total of 300 variables). Panel version and wall version. Remote control over the internet with IP address. Management of units in groups or zones. Managing alarms. Planner. Creation of diagrams. Touch screen.

AIR CONDENSED SPLIT AND PACKAGED SYSTEMS p.565

ISPK

Vertical packaged in mono-block or split configuration for indoor installations. Reversible heat pump. Tandem scroll compressors and EC plug-fan for indoor and outdoor section. High seasonal efficiency. Configuration flexibility. R-410A refrigerant.

4 000 to 21 000m³/h

19 to 115kW

19 to 120 kW

Page 565

SC

Air-cooled condensing units designed for installation outdoors. They can be connected on-site with one direct expansion exchanger. Configuration flexibility. Silent operation. R-410A refrigerant..

20 to 135kW

20 to 145kW

Page 577

CZ

Indoor units with direct expansion exchanger for R-410A refrigerant. Horizontal construction designed for installation indoors, connected to a network of ducts. Configuration flexibility.

4 000 to 24 000m³/h

20 to 135kW

20 to 145kW

Page 589

WATER-SOURCED HEAT PUMPS p.595

NEPTUS XP

Personalized control in offices and shopping centers. Vertical construction designed for installation indoors. Discreet solution in centralized units with closed water loop. Applicable also for geothermal installations. R-410A refrigerant.

3 760 to 20 400 m³/h

25 to 92 kW

28 to 110 kW

Page 595

OFFICES ADMINISTRATION SHOPPING CENTRES HEALTHCARE INDUSTRIES HOTELS

CIAT

HEAT PUMPS & WATER CHILLERS

AIR-COOLED UNITS

EREBA HE P.29
4 to 15kW | 4 to 17kW

EREBA ACCESS P.43
17 to 40kW | 17 to 40kW

EREBA 17-21 ..... P.55
15 to 18kW | 17 to 21kW

AQUACIAT LD/ILD P.67
LD 40 to 156kW | ILD 38 to 148kW | 42 to 150kW

AQUACIAT CALEO TD P.83
25 to 102kW

AQUACIAT POWER LD P.97
168 to 740kW

AQUACIAT POWER ILD P.121
156 to 511kW | 173 to 537kW

POWERCIAT LX P.141
273 to 1493kW

DYNACIAT LGN P.169
23 to 175kW

DYNACIAT POWER LGN P.183
200 to 450kW

CIATCOOLER LP P.191
18 to 192kW

CONTROL AND SUPERVISION

POWER'CONTROL P.201

CIATM2M P.203

Cooling Heating

EREBA HE

Reversible air-to-water heat pump

Simple, reliable,

high efficiency heat pump

Built-in hydraulic module

Equipped with ***NHC control***

Nominal heating capacity: *4 to 15 kW*

Nominal cooling capacity: *4 to 17 kW*

60°

Cooling and heating

inverter

Energy Soft

HFC R410A

EUROVENT CERTIFIED PERFORMANCE
www.eurovent-certification.com

USE

The EREBA He air-to-water heat pump is designed for heating and cooling applications in new and existing individual homes and small businesses.

When installed alone, the EREBA He is compatible with low to medium temperature emitters (underfloor heating, fan coil units, water cassettes, radiators, mixed installations, etc.).

The EREBA He is also compatible with medium to high temperature emitters for boiler back up operation.

The EREBA He heat pump is installed outdoors in an open area, ideally as close as possible to the boiler room.

Each device is tested in the factory and delivered ready for operation.

RANGES

The EREBA He range of reversible heat pumps comprises 4 single-phase models and 2 three-phase models.

Operation in cooling mode with an outdoor temperature of 0 °C to 46 °C.
Operation in heating mode with an outdoor temperature of -20 °C to 35 °C.

If the heat pump is the only source of heat:
Below the equilibrium temperature, heating must be provided by another heating source or using an additional electrical supply actuated by the EREBA He.

If the heat pump is used for back up operation:
it operates down to the equilibrium point (temperature below which the heat pump can no longer keep up with heating requirements); below this point, the heat pump and boiler run alternately (heat pump or boiler).

COMPLIANCE

EMC: Electromagnetic Compatibility directive 2014/30/EU

RoHS: Restriction of Hazardous Substances directive 2011/65/EU

Ecodesign 2009/125/EC

Machinery 2006/42/EC

29

EREBA He

Reversible air-to-water heat pump

The new EREBA He air-to-water reversible heat pumps, with Inverter technology, have been designed for residential applications and for small commercial installations. They offer excellent energy efficiency and exceptionally quiet operation.

These units integrate the very latest technological innovations: R410A refrigerant fluid which does not contribute to ozone depletion, Twin Rotary DC Inverter compressors, a low-noise fan with an electronic control.

ErP READY

Ecodesign is the European environmental design directive, aimed at improving the energy efficiency of energy-related products (ErP) through regulation. Ciat supports initiatives to reduce the environmental impact of its products.

Specifications

- A vast operating range, both in cooling and heating mode, offering great performance across a broad range of temperatures.
- Twin Rotary DC Inverter compressors with pulse amplitude modulation (PAM) and pulse wave modulation (PWM) for increased reliability, reduced energy consumption and operation without vibrations, whatever the operating conditions.
- Variable speed fans with a patented innovative blade shape, ensuring better distribution of air at exceptionally low sound levels.
- Pre-configured or customisable water laws, for stable power levels which correspond to the losses.
- The option to connect and integrate the unit into existing heat sources or into an auxiliary heating source (approach with a single or dual energy source), which allows for increased savings and optimal comfort, no matter the weather conditions.
- Inlet and outlet connections to the three-way valve, to enable connection to a domestic hot water buffer tank, increase the flexibility of use, regardless of the application.
- A water outlet temperature of up to 60 °C for heating and domestic hot water in residential applications.
- Plug and play control for intrinsic maintenance and servicing safety.
- For enhanced safety, an incoming alarm signal can force the unit to shut down, and is compatible with external safety devices or control systems.
- Outgoing signal making it possible to control the operation of a customer's accelerator pump or additional pump to increase the versatility of the installation.

Advanced technology

- Electronic system management: several sensors placed in key positions within the refrigerant circuit detect the operating status of the system. Two micro-controls receive signals sent by the sensors; these are managed using advanced control algorithms and optimise the refrigerant flow rate and the operation of all the main components – the compressor, the fan motors, and the electronic expansion valve.
- The electronic expansion valve is an electronic dual-flow expansion device, which optimises the volume of refrigerant fluid present in the circuit and overheating, preventing the fluid from returning to the compressor. This device further improves system performance and reliability.
- The air management system, which comprises the axial flow fan, the orifice and the air discharge grille, guarantees minimised sound levels.

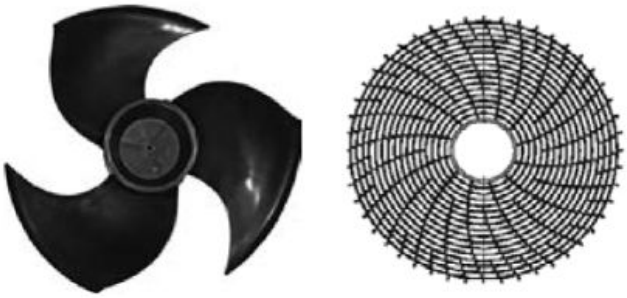

New patented fan blade shape and low pressure drop grille

- The new coil has a blue hydrophilic coating which allows water to migrate more easily to the exchanger using gravity.

  In particular, this innovation enables:
  - the frosting time to be increased by reducing the accumulation of frost on the coil
  - better defrosting by improving the flow of water over the fins

  Operation in heating mode is thereby improved.

Advanced performances

- The EREBA He offers extremely high energy efficiency, both in heating mode and in cooling mode, thereby guaranteeing significant energy savings. Large coils with high efficiency and optimised circuits ensure that all the combinations meet the European objectives concerning tax deductions relating to energy savings. The part load efficiency (seasonal energy efficiency) reaches the highest level in this industrial sector.
- Year-round comfort – the advanced technology used in the EREBA He provides users with optimised levels of comfort, in terms of water temperature regulation and the low sound level. The required temperature is obtained rapidly, and kept constant, without any fluctuations. The EREBA He offers optimised levels of comfort in both winter and summer.
- The EREBA He can operate at low ambient temperatures in cooling mode (from outdoor temperatures of 0 °C to 46 °C). To ensure the comfort of users, the units operate down to an outdoor temperature of -20 °C in heating mode, while in summer, they can produce hot water up to 60 °C, at an outdoor temperature of up to 35 °C for domestic hot water applications.
- The EREBA He also features the new Energy soft technology. This advanced control logic allows outdoor air to be extracted in order to guarantee energy-efficient defrosting without the use of the compressor.
  Unlike traditional defrosting technology, Energy soft has virtually no thermal impact on the water loop.

Environmental care

- Ozone-friendly R410A refrigerant.
- Fluid from the HFC family, a chlorine-free product which does not deplete the ozone layer.
- Very dense, so a smaller amount is required than other fluids.
- Highly efficient, it enables a high energy efficiency ratio (EER) to be obtained.
- The components of the EREBA He are free from hazardous substances.
- The packaging offers increased protection during transport and handling, and is 100 % recyclable.

Quick and simple to install and maintain

- Easy access to all internal components: simply undo three screws to remove the entire front panel, in order to access all of the components.
- The advanced circuit design and choice of components has enabled a compact unit to be created, with an exceptionally small footprint that is easy to transport even through narrow doors.
- The reduced weight of the unit, and the presence of a handle on the panels, ensure it is easy to transport.
- 3 bar safety valve fitted as standard.
- Internal two- or three-litre expansion vessel.
- Protection against high refrigerant temperatures.
- Water flow controller to ensure that the circuits contain enough water to operate correctly.
- Several options for the electrical cable outlets: prepunched holes in the casing panels enable the cable to be fed via the side, front, or rear.
- The EREBA He has gas type male couplings.
- The built-in hydraulic module reduces the space required and simplifies installation. Simply connect up all the connections: electrical, water supply, and return pipes.
- The coupling between the condensate draining pipe and the unit has an airtight rubber gasket.
- The mounting brackets have a specially designed shape to ensure that the unit is safely and securely attached to its base.

Twin Rotary DC Inverter compressors

- Advanced technology, which offers maximum energy efficiency, with high capacity available under peak conditions, and optimised efficiency at low and moderate compressor speeds. The EREBA He heat pump uses IPDU (intelligent power drive unit) hybrid inverter technology, which combines two electronic control logics: pulse amplitude modulation (PAM) and pulse width modulation (PWM) to ensure the compressor provides optimised operation under all conditions, to minimise temperature fluctuations, and ensure perfect control of individual comfort, whilst significantly reducing energy consumption.
  - PAM: the pulse amplitude modulation of the direct current controls the compressor under maximum load conditions (start-up and peak load), which increases the voltage at a fixed frequency. The compressor runs at a high speed to quickly reach the desired temperature.
  - PWM: the pulse width modulation of the direct current controls the compressor at partial load conditions, adjusting the frequency at fixed voltage. The compressor speed is adjusted with precision, and the system offers an enhanced level of comfort (no fluctuations in temperature) in operating conditions with exceptional efficiency.
- The compressor frequency is increased continuously up to the maximum level. This ensures there are no current peaks during the start-up phase, and provides a secure connection to a single-phase current supply, even for large capacity systems. The maximum operating current of the EREBA He is less than 8.9 A (for systems up to 5 kW) and less than 25.6 A for larger systems (15 kW). The inverter warm-up speed makes soft starts unnecessary by ensuring maximum capacity immediately.
- The two rotating compression cylinders, offset from one another by 180°, and the brushless DC motor with a perfectly balanced shaft, ensure that vibrations and noise are reduced to a minimum, even at very low operating speeds. This gives a very wide operating range between the minimum capacity and the maximum capacity in continuous operation, which guarantees that the system is always optimised and provides maximum comfort at exceptionally high levels of energy efficiency.
- The two rotating compression cylinders, the low vibrations and the low load imposed on the shaft ensure the compressor offers the best possible reliability and a long and trouble-free service life.
- All two-cylinder rotary compressors with a brushless DC inverter motor are equipped with crankcase heaters as standard.
- A double protective screen soundproofs the compressor, further reducing the sound levels.

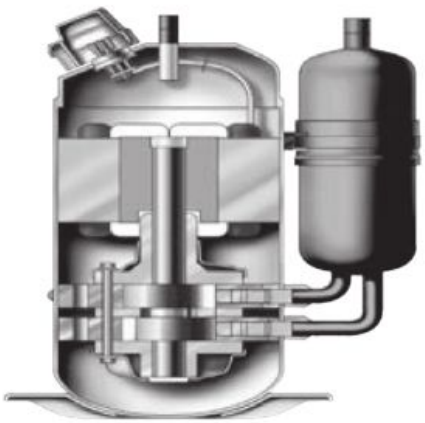

Absolute reliability

■ Exceptional endurance tests:

- All the units undergo tests at various stages of their manufacture to ensure tightness of the circuits, electrical conformity, and to check the water and refrigerant pressure.
- At the end of production, all the unit's operating parameters are thoroughly tested.
- Corrosion resistance test.
- Accelerated ageing test on the critical components and on the fully-assembled units, simulating thousands of hours of continuous operation.
- Impact testing on the packaging, to ensure that the units are suitably protected against accidental impacts.
- Numerous, comprehensive test on-site.

Economical operation

■ High energy efficiency:

- The exceptionally high energy efficiency of EREBA He heat pumps is the result of a long selection and optimisation process.
- The use of ambient air as the main energy source in residential heating applications considerably reduces energy consumption and CO_2 emissions.
- Sleep mode, with reduced compressor speed at night, provides a low operating sound level, and significant reductions in energy consumption.
- An easily adjustable and economic silent mode reduces the compressor speed.
- The R-410A refrigerant is easier to use than other fluids.

NHC Control

NHC control associate with compressor and fan variable frequency driver combines intelligence with operating simplicity. The control constantly monitors all machine parameters and precisely manages the operation of compressor, expansion devices, fans and of the water heat exchanger water pump for optimum energy efficiency.

■ Ease-of-use

- NHC control can be associated with a new User interface (WUI) which allow an easy access to the configuration parameters (frequency compressor, refrigerant circuit temperature, sets points, air temp, entering water temp, alarm report…).
- This user interface is also very intuitive in its use. It allows reading and easy selection of the operating mode. The functions are represented by icons on the LCD backlit screen.

To facilitate the use of this interface, 3 levels of access are available: end user, installer and factory.

■ Key features

- Heating and cooling mode
- Predefined climatic curves (12) or customized climatic curve (Water temperature setpoint control)
- Air temperature set point control
- Scheduling mode
- Low noise level or night mode
- Antifreeze protection by triggering the internal accelerator pump
- Slab curing mode
- Backup electric heater controlled in 1 /2 /3 heat stage(s)
- Backup by oil or gas boiler
- Hydraulic module with control of the flow rate
- Managed an additional pump
- Swimming pool heating management between seasons
- Manage domestic hot water with or without
  - Anti-legionella mode
  - Auxiliary heater in the DHW tank
- Master-slave control of 4 units operating in parallel with operation time balancing and automatic changeover in case of a unit fault (sensor available as accessory).
- ModBUS Protocol

■ Choice of control product

Two options are available to actuate the EREBA heat pump:

- User interface WUI
- ModBus protocol

User Interface WUI

This interface can be installed up to 50 m away. It is connected to the NHC control using 4 H07RN-F 0.75 mm² cables.

The WUI has an internal sensor to measure the room temperature.

Regulation can be based on the room air temperature.

■ Modbus

Direct access with Modbus connection to set, configure and monitor the EREBA He unit.

Large choice of input contacts:

- Remote On/Off contact.
- Remote Heat/Cool Contact: This switch is used to select the Cooling Mode (contact opened) or the Heating Mode (contact closed).
- Remote Economic Contact: This switch is used to select the regular Home Mode when contact is opened or the Economic Away Mode when contact is closed.
- Safety Input Contact: This switch is normally closed type, according to configuration it is used either to stop the unit, to ban the Heating Mode or to ban the Cooling Mode when contact is opened.

Several functions can be configured by the installer. They allow to adapt to the environment of the machine:

- Power Limitation / Night Mode: This switch is used to reduce the compressor maximum frequency to avoid noise.
- Off Peak: If the General Purpose Contact, configured to “Off Peak”, is closed then the Electric Heat Stages are not allowed.
- Loadshed Request: If the General Purpose Contact, configured to “Loadshed Request”, is closed then unit shall be stopped as soon as possible.
- Solar Input: If the General Purpose Contact, configured to “Solar Input”, is closed then the unit is not allowed to run in Heating or DHW Mode because hot water is produced from a solar source.
- DHW Priority : When this input is closed, the unit is switching to Domestic Hot Water production regardless of the Space Heating demand and the current DHW schedule (need DHW sensor delivered in accessory).
- Anti-Legionella Cycle Request : When this input is closed, the Domestic Hot Water production is requested with the Anti-Legionella setpoint.
- Summer Switch : This switch is used to select the Winter (contact opened) or the Summer Mode (contact closed).
- Energy Meter Input : This input is used to count the number of pulses received from an external energy meter (not supplied)
- External Alarm Indication Input : When this input is opened, alarm is tripped. This alarm is for information only, it does not affect the unit operation.

Output remote contact available

Two output contacts can be chosen on the NHC board, based on the desired configuration:

Status: alert (Machine still running), Alarm, Standby, in Cooling or Heating or DHW or Defrost mode, Cooling Mode, Heating Mode, DHW Mode, defrost mode, indoor air temperature reached, electric stage 2 activated, electric stage 3 activated.

33

PHYSICAL DATA

EREBA He				5H	7H	11H	15H	11 HT	15 HT
Heating									
Standard unit Full load performances*	HA1	Nominal capacity	kW	5,10	7,15	11,25	15,10	11,20	15,00
		COP	kW/kW	4,40	4,10	4,70	4,25	4,60	4,35
	HA2	Nominal capacity	kW	4,85	6,80	11,30	13,40	10,40	13,50
		COP	kW/kW	3,40	3,20	3,60	3,40	3,60	3,50
	HA3	Nominal capacity	kW	4,45	6,75	11,20	11,65	10,25	11,80
		COP	kW/kW	2,80	2,70	2,95	2,90	3,00	3,00
Standard unit Seasonal energy efficiency **	HA1	SCOP $_{30/35\ °C}$	kWh/kWh	4,73	4,68	4,39	4,41	4,26	4,35
		Ηs heat $_{30/35\ °C}$	%	186	184	173	173	167	171
	HA3	**SCOP $_{47/55\ °C}$**	**kWh/kWh**	**3,32**	**3,36**	**3,35**	**3,45**	**3,34**	**3,40**
		Ηs heat $_{47/55\ °C}$	**%**	**130**	**131**	**131**	**135**	**131**	**133**
		P_{rated}	kW	3.49	4.32	8.69	10.30	8.69	11.09
		Energy labelling		A++	A++	A++	A++	A++	A++
Cooling									
Standard unit Full load performances (*)	CA1	Nominal capacity	kW	4,00	5,55	11,20	12,80	10,65	13,00
		EER	kW/kW	3,10	3,10	3,40	3,10	3,40	3,20
		Eurovent class		A	A	A	A	A	A
	CA2	Nominal capacity	kW	4,85	8,00	13,70	16,00	13,75	17,00
		EER	kW/kW	4,35	4,00	4,60	4,10	4,65	4,15
		Eurovent class		A	A	A	A	A	A
Standard unit Seasonal energy efficiency **		SEER $_{12/7\ °C}$ Comfort low temp.	kWh/kWh	4,85	5,75	5,15	5,00	5,40	5,25
		Ηs cool $_{12/7\ °C}$	%	191	227	203	197	212	208
Sound levels									
Standard unit									
Sound power level (2)			dB(A)	64	65	68	69	69	69
Sound pressure level at 10 m(3)			dB(A)	33	34	37	38	38	38
Dimensions									
Length			mm	908	908	908	908	908	908
Width			mm	350	350	350	350	350	350
Height			mm	821	821	1363	1363	1363	1363
Operating weight(1)									
Standard unit			kg	57	69	115	115	121	121
Compressors			Rotary compressor	1	1	1	1	1	1
Refrigerant			R410A						
Charge(1)			kg	1,10	1,60	2,80	2,80	3	3
Capacity control									
Minimum capacity (4)			%	23 %	20 %	20 %	17 %	20 %	17 %
Condenser				Grooved copper tubes, aluminium fins					
Fans				Axial type					

*	In accordance with standard EN14511-3:2013.
**	In accordance with standard EN14825:2016, average climate
HA1	Heating mode conditions: Water heat exchanger water entering/leaving temperature 30°C/35°C, outside air temperature tdb/twb = 7°C db/6°C wb, evaporator fouling factor 0 m². k/W
HA2	Heating mode conditions: Water heat exchanger water entering/leaving temperature 40°C/45°C, outside air temperature tdb/twb = 7°C db/6°C wb, evaporator fouling factor 0 m². k/W
HA3	Heating mode conditions: Water heat exchanger water entering/leaving temperature 47°C/55°C, outside air temperature tdb/twb = 7°C db/6°C wb, evaporator fouling factor 0 m². k/W
CA1	Cooling mode conditions: evaporator water inlet/outlet temperature 12 °C/7 °C, outdoor air temperature 35 °C, evaporator fouling factor 0 m². k/W
CA2	Cooling mode conditions: evaporator water inlet/outlet temperature 23 °C/18 °C, outdoor air temperature 35 °C, evaporator fouling factor 0 m². k/W
Ηs heat $_{30/35\ °C}$ & SCOP $_{30/35\ °C}$	Values calculated in accordance with standard EN14825:2016
Ηs heat $_{47/55\ °C}$ & SCOP $_{47/55\ °C}$	**Values in bold comply with Ecodesign Regulation (EU) No. 813/2013 for heating application**
Ηs cool $_{12/7\ °C}$ & SEER $_{12/7\ °C}$	Values calculated in accordance with standard EN14825:2016
(1)	Values are guidelines only. Refer to the unit nameplate
(2)	In dB re.f=10-12 W, (A) weighting. Declared dual number noise emission value in accordance with ISO 4871 (with an associated uncertainty of +/-2dB(A)). Measured in accordance with ISO 9614-1 and certified by EUROVENT
(3)	In dB ref 20 µPa, (A) weighting. Declared dual number noise emission value in accordance with ISO 4871 (with an associated uncertainty of +/-2dB(A)). For information, calculated from the sound power level Lw(A)
(4)	Cooling Eurovent condition

EUROVENT CERTIFIED PERFORMANCE www.eurovent-certification.com

Eurovent certified values

PHYSICAL DATA

EREBA He		5H	7H	11H	15H	11 HT	15 HT
Quantity		1	1	2	2	2	2
Maximum total air flow	l/s	800	800	1800	1800	1800	1800
Maximum rotational speed	rpm	560	660	820	820	820	820
Evaporator		Brazed plate heat exchanger					
Water volume	l	1,7	2,3	4,4	4,4	4,4	4,4
Hydraulic module		Circulator, relief valve, paddle flow switch, expansion tank					
Circulator		Centrifugal pump (variable speed)					
Expansion tank volume	l	2	2	3	3	3	3
Max. water-side operating pressure with hydraulic module (5)	kPa	300	300	300	300	300	300
Water connections							
Inlet diameter (BSP GAS)	inch	1	1	1	1	1	1
Outlet diameter (BSP GAS)	inch	1	1	1	1	1	1
Chassis paint colour	Colour code:	RAL 7035	RAL 7035	RAL 7035	RAL 7035	RAL 7035	RAL 7035

(5) The min. water-side operating pressure with variable speed hydraulic module is 40 kPa.

ELECTRICAL DATA

EREBA He		5H	7H	11H	15H	11 HT	15 HT
Nominal power supply	V-ph-Hz	230-1-50	230-1-50	230-1-50	230-1-50	400-3N-50	400-3N-50
Voltage range	V	220-240	220-240	220-240	220-240	380-415	380-415
Current at full load	A	8,9	16,7	23,3	25,6	16,8	16,8
Fuse capacity	A	16	20	32	32	20	20
Electrical power cable section (H07 RN-F)	mm²	2,5	2,5	4	4	2,5	2,5
WUI (user interface) cable section	mm²	H07RN-F 4 x 0.75					
Circuit breaker	Am	10	16	25	25	16	16

Dimensions (mm)

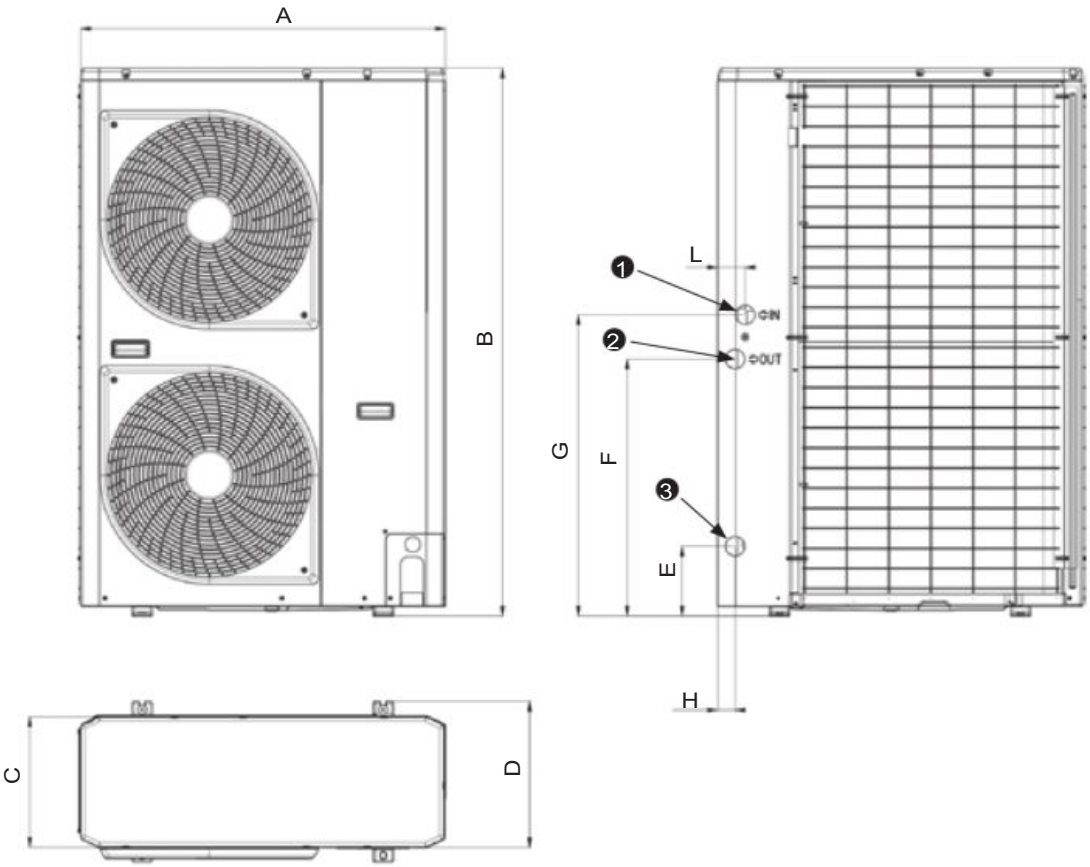

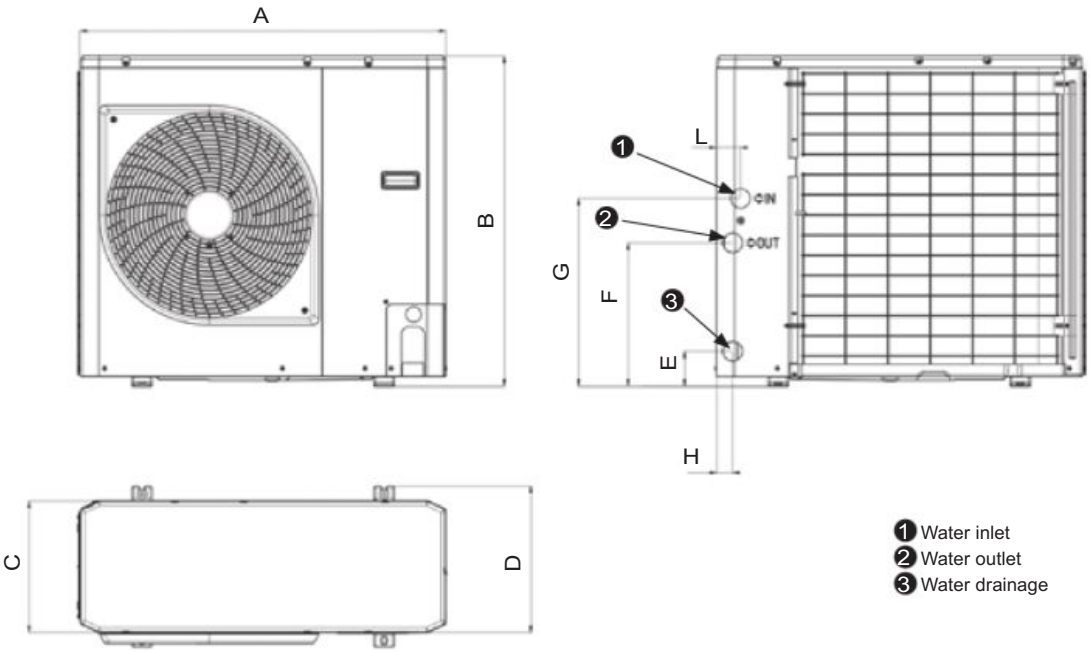

1 Water inlet
2 Water outlet
3 Water drainage

EREBA He	A	B	C	D	E	F	G	H	L	mass (kg)
5H	908	821	326	350	87	356	466	40	60	57
7H	908	821	326	350	87	356	466	40	60	69
11H	908	1363	326	350	169	645	744	43	73	115
15H	908	1363	326	350	169	645	744	43	73	115
11HT	908	1363	326	350	169	645	744	43	73	121
15HT	908	1363	326	350	169	645	744	43	73	121

CONDENSATE DRAINING PIPE AND PREPUNCHED HOLES IN THE BASE

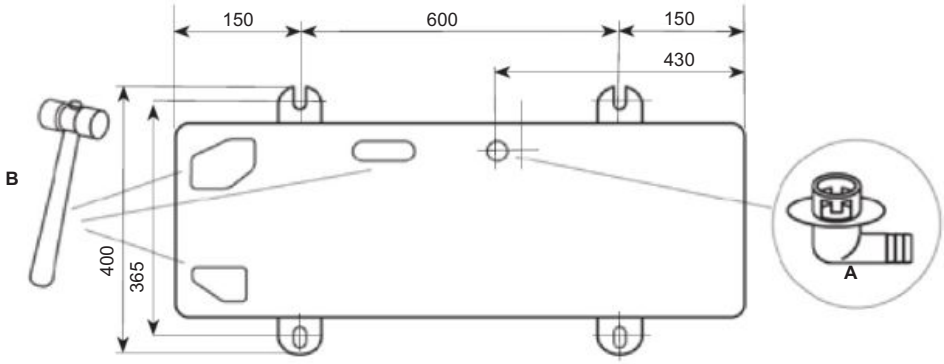

If drainage is provided by the draining pipe, connect the nipple (A) and use the draining pipe (internal diameter: 16 mm) available commercially. If the installation is to be located in a very cold area or area with high snowfall levels, where the condensate draining pipe could freeze, the drainage capacity of the pipe must be checked, or a electric heat trace cable must be added.

The drainage capacity increases if the prepunched holes in the condensate pan are open (open the prepunched holes outwards using a hammer (B), etc.).

FREE SPACE (MM)

Installation of a single unit

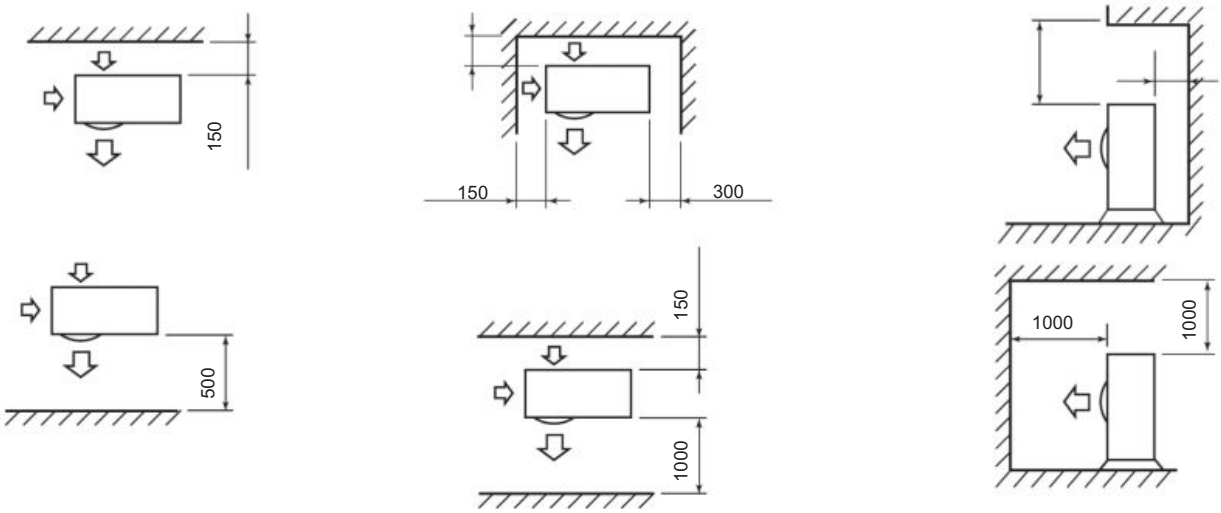

Installation of multiple units

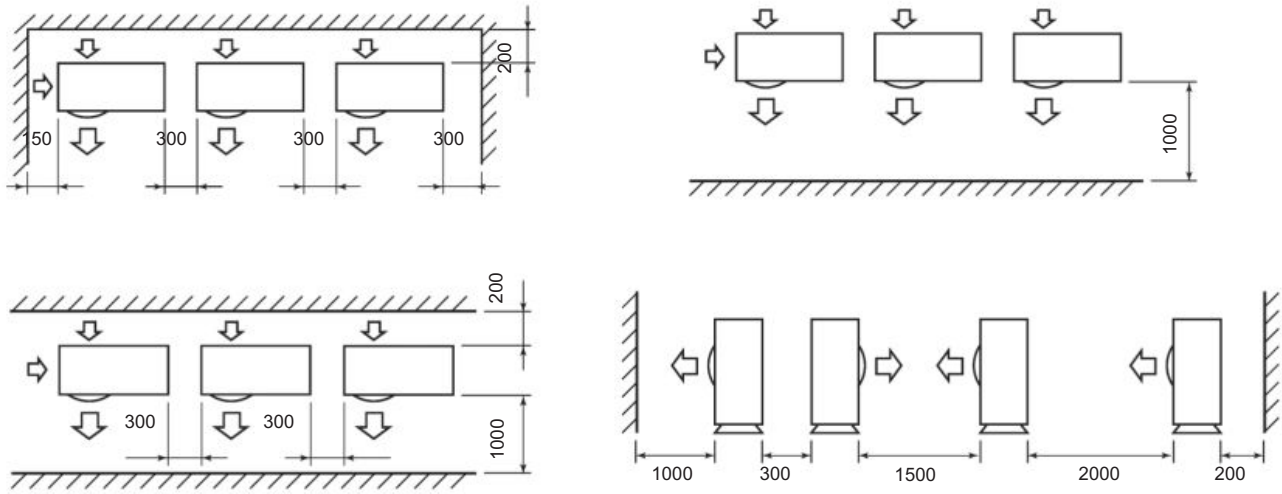

Note: The height of obstacles at the front and rear should be less than the height of the outdoor unit

HEATING MODE SELECTION TABLE

EREBA He

EREBA He	LWT °C	Outdoor air dry temperature (wet temperature), °C																				
		-20 (-21)							-15 (-16)							-10 (-11)						
		Hc			COP			q	Hc			COP			q	Hc			COP			q
		kW			kW/kW			l/s	kW			kW/kW			l/s	kW			kW/kW			l/s
		Nom	Min	Max	Nom	Min	Max	Nom	Nom	Min	Max	Nom	Min	Max	Nom	Nom	Min	Max	Nom	Min	Max	Nom
5H	35	1,00	0,42	1,00	1,86	1,91	1,86	0,050	2,26	0,49	2,34	2,14	2,23	2,11	0,108	2,58	0,56	2,80	2,41	2,61	2,39	0,124
7H		1,81	0,68	1,81	2,00	1,87	2,00	0,117	3,89	0,76	3,89	2,29	2,52	2,29	0,187	3,90	0,84	4,66	2,81	2,89	2,34	0,187
11H		2,60	1,74	2,60	1,52	1,54	1,52	0,167	2,88	1,92	2,88	1,82	1,91	1,82	0,167	6,16	2,13	7,65	2,40	2,89	2,24	0,347
11 HT		2,65	1,86	2,65	1,55	1,60	1,55	0,167	2,91	1,96	2,91	1,87	1,95	1,87	0,167	6,32	2,24	7,95	2,50	2,95	2,18	0,303
15		2,60	1,74	2,60	1,52	1,54	1,52	0,127	2,88	1,92	2,88	1,82	1,91	1,82	0,164	7,59	2,13	8,18	2,35	2,89	2,22	0,419
15 HT		2,65	1,86	2,65	1,55	1,61	1,55	0,167	2,91	1,96	2,91	1,87	1,95	1,87	0,167	7,78	2,24	8,51	2,44	2,95	2,15	0,419
5H	45	0,78	0,39	0,78	1,71	1,87	1,71	0,050	2,05	0,45	2,10	2,09	2,14	1,94	0,098	2,47	0,52	2,67	2,21	2,39	2,20	0,118
7H		1,69	0,66	1,69	1,66	2,12	1,66	0,117	3,84	0,73	3,84	1,90	2,19	1,90	0,184	3,68	0,81	3,84	2,21	2,26	1,94	0,177
11H		2,34	1,60	2,34	1,28	1,29	1,28	0,167	2,73	1,79	2,73	1,52	1,57	1,52	0,167	3,44	1,92	3,44	1,89	1,93	1,89	0,194
11 HT		2,39	1,71	2,39	1,30	1,35	1,30	0,167	2,76	1,83	2,76	1,56	1,60	1,56	0,167	3,53	1,96	3,53	1,94	1,97	1,94	0,169
15		2,34	1,60	2,34	1,28	1,29	1,28	0,114	2,73	1,79	2,73	1,52	1,57	1,52	0,156	3,44	1,92	3,44	1,89	1,93	1,89	0,194
15 HT		2,39	1,71	2,39	1,30	1,35	1,30	0,167	2,76	1,83	2,76	1,56	1,60	1,56	0,167	3,53	1,96	3,53	1,94	1,97	1,94	0,194
5H	55															2,39	0,49	2,58	1,91	2,06	1,88	0,115
7H																3,05	0,74	3,35	1,80	2,07	1,75	0,146
11H																2,97	1,85	2,97	1,30	1,29	1,30	0,167
11 HT																3,03	1,89	3,03	1,32	1,34	1,32	0,167
15																2,97	1,85	2,97	1,30	1,29	1,30	0,158
15 HT																3,03	1,89	3,03	1,32	1,34	1,32	0,167
5H	60															2,33	0,46	2,50	1,86	2,01	1,83	0,112
7H																2,68	0,69	2,68	1,54	1,84	1,54	0,129
11H																2,44	1,69	2,44	1,10	1,11	1,10	0,167
11 HT																2,47	1,72	2,47	1,12	1,13	1,12	0,167
15																2,44	1,69	2,44	1,10	1,11	1,10	0,123
15 HT																2,48	1,72	2,48	1,12	1,13	1,12	0,167

EREBA He	LWT °C	Outdoor air dry temperature (wet temperature), °C																				
		-7 (-8)							2 (1)							7 (6)						
		Hc			COP			q	Hc			COP			q	Hc			COP			q
		kW			kW/kW			l/s	kW			kW/kW			l/s	kW			kW/kW			l/s
		Nom	Min	Max	Nom	Min	Max	Nom	Nom	Min	Max	Nom	Min	Max	Nom	Nom	Min	Max	Nom	Min	Max	Nom
5H	35	3,35	0,64	3,55	3,01	3,19	3,00	0,160	3,61	1,30	3,83	3,79	3,90	3,66	0,750	5,10	0,82	5,27	4,40	4,58	4,34	0,248
7H		4,10	0,94	4,95	3,00	3,21	2,48	0,196	4,90	1,04	5,68	3,57	3,71	3,24	1,040	7,15	1,36	8,77	4,10	4,46	3,31	0,343
11H		6,81	2,52	8,50	2,93	2,99	2,80	0,379	8,35	5,22	9,65	3,68	3,92	3,58	1,790	11,25	3,73	13,67	4,70	4,90	4,21	0,544
11 HT		6,98	2,57	8,20	3,00	3,05	2,85	0,335	8,32	5,28	10,56	3,63	4,48	3,49	1,950	11,20	3,80	14,19	4,60	4,99	4,32	0,559
15		8,50	2,52	9,00	2,82	2,99	2,70	0,464	9,65	5,22	10,42	3,58	3,92	3,47	2,120	15,10	3,73	15,92	4,25	4,90	4,16	0,694
15 HT		8,72	2,57	9,15	2,90	3,05	2,75	0,464	9,65	5,28	10,40	3,56	4,48	3,37	2,250	15,00	3,80	16,52	4,35	4,99	4,27	0,694
5H	45	3,17	0,60	3,40	2,65	2,81	2,60	0,152	3,44	1,15	3,62	3,01	2,79	2,93	0,710	4,85	0,74	4,99	3,40	3,52	3,34	0,234
7H		3,83	0,90	4,58	2,33	2,51	2,06	0,184	4,31	1,00	5,53	2,81	2,71	2,56	0,990	6,80	1,31	7,96	3,20	3,42	2,83	0,328
11H		6,48	2,37	7,95	2,42	2,44	2,29	0,361	7,53	4,93	9,41	2,96	3,03	2,92	1,710	11,30	3,58	12,64	3,60	3,73	3,31	0,555
11 HT		6,63	2,42	8,13	2,47	2,49	2,34	0,318	8,18	5,32	9,37	3,12	3,17	2,88	1,690	10,40	3,65	13,12	3,60	3,80	3,35	0,565
15		7,88	2,37	8,40	2,29	2,44	2,20	0,430	9,41	4,93	9,24	2,92	2,97	2,84	2,020	13,40	3,58	15,31	3,40	3,73	3,28	0,647
15 HT		8,06	2,42	8,60	2,34	2,49	2,24	0,430	8,70	5,32	10,46	2,94	3,17	2,78	2,060	13,50	3,65	15,88	3,50	3,80	3,32	0,647
5H	55	2,90	0,56	2,96	1,99	2,10	1,95	0,139	3,30	1,09	3,30	2,42	2,63	2,42	0,670	4,41	0,68	4,41	2,79	2,95	2,79	0,211
7H		3,17	0,85	3,17	1,90	2,30	1,86	0,152	3,83	0,97	3,83	2,22	2,44	2,22	0,860	6,51	1,27	7,35	2,59	2,80	2,43	0,312
11H		5,70	2,29	7,06	1,82	1,88	1,76	0,317	7,59	5,23	7,47	2,40	2,48	2,21	1,540	9,46	3,22	11,08	2,69	2,73	2,46	0,453
11 HT		5,81	2,34	7,20	1,85	1,92	1,79	0,279	7,66	5,62	9,43	2,47	2,54	2,39	1,600	9,93	3,28	11,63	2,72	2,76	2,48	0,476
15		6,93	2,29	7,40	1,73	1,88	1,67	0,378	7,47	5,23	7,47	2,21	2,36	2,21	1,660	13,09	3,22	14,32	2,54	2,73	2,43	0,615
15 HT		7,07	2,34	7,55	1,76	1,92	1,70	0,378	8,70	5,62	10,24	2,42	2,54	2,32	1,960	13,61	3,28	14,90	2,56	2,76	2,45	0,615
5H	60	2,56	0,52	2,82	1,93	2,04	1,89	0,123	3,10	1,00	3,10	2,20	2,56	2,20	0,620	3,88	0,65	3,88	2,44	2,66	2,44	0,186
7H		2,79	0,81	2,79	1,62	2,05	1,62	0,134	3,56	0,96	3,56	2,07	2,13	2,07	0,730	5,16	1,25	5,16	2,15	2,32	2,15	0,247
11H		4,99	2,15	6,30	1,46	1,45	1,45	0,278	5,96	4,87	7,45	2,09	2,14	2,07	1,640	8,48	3,10	9,94	2,10	2,12	2,03	0,406
11 HT		5,06	2,20	6,39	1,46	1,47	1,45	0,243	7,02	5,38	9,09	2,20	2,31	2,15	1,500	8,90	3,16	10,44	2,21	2,23	2,13	0,427
15		6,27	2,15	6,72	1,44	1,45	1,40	0,342	7,45	4,87	7,45	2,07	2,04	2,07	1,860	12,40	3,10	13,62	2,06	2,12	2,01	0,582
15 HT		6,37	2,20	6,82	1,44	1,47	1,40	0,342	8,26	5,38	9,99	2,20	2,31	2,12	1,840	12,90	3,16	14,17	2,10	2,14	2,06	0,582

Key

LWT	Water outlet temperature, °C
Hc	Heating capacities, kW
Nom	Nominal
Min	Minimum
Max	Maximum
COP	Coefficient of performance, kW/kW
q	Water flow rate to the condenser, l/s

Application data

Application data
Standard units, refrigerant: R-410A
Condenser water outlet or water inlet temperature difference: 5 K
Condenser fluid: water
Fouling coefficient: 0 m² k/W
Established performance as per EN 14511

EUROVENT CERTIFIED PERFORMANCE
www.eurovent-certification.com

HEATING MODE SELECTION TABLE

EREBA He

EREBA He	LWT °C	Outdoor air dry temperature (wet temperature), °C						
		10 (9)						
		Hc			COP			q
		kW			kW/kW			l/s
		Nom	Min	Max	Nom	Min	Max	Nom
5H	35	5,54	0,92	5,88	4,66	4,86	4,51	0,266
7H		7,38	1,44	8,65	4,35	4,69	3,94	0,354
11H		12,14	3,87	14,51	4,94	5,30	4,44	0,581
11 HT		12,44	4,03	15,24	5,04	5,41	4,57	0,596
15		15,86	4,15	17,23	4,40	5,88	4,25	0,736
15 HT		15,75	4,03	17,15	4,54	5,41	4,44	0,736
5H	45	5,05	0,83	5,36	3,69	3,85	3,60	0,242
7H		7,04	1,36	8,36	3,13	3,37	3,21	0,337
11H		11,37	3,84	13,37	3,85	4,27	3,45	0,544
11 HT		11,65	3,92	14,04	3,93	4,36	3,52	0,559
15		14,40	3,84	14,40	3,51	4,27	3,51	0,691
15 HT		15,20	3,92	16,58	3,76	4,36	3,48	0,710
5H	55	4,61	0,76	4,61	2,88	3,01	2,88	0,221
7H		6,53	1,30	7,58	2,73	3,01	2,68	0,313
11H		10,07	3,47	11,70	2,83	2,85	2,43	0,482
11 HT		10,36	3,61	12,29	2,88	2,91	2,55	0,497
15		11,81	3,47	11,81	2,93	3,14	2,93	0,556
15 HT		14,33	3,61	15,64	2,87	2,91	2,82	0,667
5H	60	4,14	0,73	4,14	2,58	2,74	2,58	0,199
7H		5,96	1,22	5,96	2,26	2,49	2,26	0,286
11H		8,20	2,89	8,20	2,31	2,33	2,31	0,392
11 HT		8,61	3,01	8,61	2,37	2,43	2,37	0,413
15		10,68	2,89	10,68	2,64	2,79	2,64	0,493
15 HT		8,61	3,01	8,61	2,37	2,43	2,37	0,392

Key

LWT	Water outlet temperature, °C
Hc	Heating capacities, kW
Nom	Nominal
Min	Minimum
Max	Maximum
COP	Coefficient of performance, kW/kW
q	Water flow rate to the condenser, l/s

Application data

Application data
Standard units, refrigerant: R-410A
Condenser water outlet or water inlet temperature difference: 5 K
Condenser fluid: water
Fouling coefficient: 0 m² k/W
Established performance as per EN 14511

EUROVENT CERTIFIED PERFORMANCE
www.eurovent-certification.com

1

COOLING MODE SELECTION TABLE

EREBA He

EREBA He	LWT °C	Outside air dry temperature, °C																				
		5							15							25						
		Cc			EER			q	Cc			EER			q	Cc			EER			q
		kW			kW/kW			l/s	kW			kW/kW			l/s	kW			kW/kW			l/s
		Nom	Min	Max	Nom	Min	Max	Nom	Nom	Min	Max	Nom	Min	Max	Nom	Nom	Min	Max	Nom	Min	Max	Nom
5H	5								1,07	1,07	1,07	6,72	6,72	6,72	0,051	2,14	0,91	2,14	4,01	6,07	4,01	0,103
7H		5,44	0,76	5,44	7,59	10,74	7,59	0,262	5,37	0,76	5,37	5,57	7,57	5,57	0,252	5,60	0,59	6,45	3,85	4,25	3,76	0,263
11H		13,06	2,56	16,02	6,24	12,27	5,48	0,626	12,39	3,57	13,24	5,48	7,78	5,18	0,594	11,51	3,05	13,27	4,30	4,73	3,88	0,552
11 HT		13,19	2,59	16,18	6,30	12,39	5,54	0,633	12,52	3,61	13,37	5,54	7,86	5,23	0,600	11,62	3,09	13,40	4,35	4,78	3,91	0,557
15		15,00	2,56	16,02	5,95	12,27	5,48	0,704	13,24	3,57	13,24	5,18	7,78	5,18	0,621	13,27	3,05	13,27	3,88	4,73	3,88	0,623
15 HT		15,15	2,59	16,18	6,01	12,39	5,54	0,711	13,37	3,61	13,37	5,23	7,86	5,23	0,628	13,40	3,09	13,40	3,91	4,78	3,91	0,629
5H	7								1,34	1,34	1,34	7,50	7,50	7,50	0,064	2,42	1,01	2,42	4,59	6,49	4,59	0,116
7H		6,03	0,93	6,03	7,98	13,34	7,98	0,283	5,59	0,95	5,59	6,15	9,55	6,15	0,275	6,14	0,77	6,78	4,31	5,62	4,16	0,288
11H		13,92	2,78	17,09	7,12	12,79	6,67	0,667	13,19	3,88	14,09	5,64	8,25	5,33	0,632	12,25	3,38	14,12	4,44	5,18	4,00	0,587
11 HT		14,05	2,80	17,26	7,19	12,92	6,74	0,674	13,32	3,92	14,23	5,70	8,33	5,39	0,639	12,37	3,41	14,26	4,48	5,23	4,04	0,593
15		16,00	2,78	17,09	6,75	12,79	6,67	0,751	14,09	3,88	14,09	5,33	8,25	5,33	0,661	14,12	3,38	14,12	4,00	5,18	4,00	0,663
15 HT		16,32	2,80	17,26	6,89	12,92	6,74	0,766	14,37	3,92	14,37	5,39	8,33	5,39	0,675	14,40	3,41	14,26	4,04	5,23	4,04	0,676
5H	10								1,49	1,49	1,49	8,47	8,47	8,47	0,071	2,71	1,17	2,71	5,21	7,31	5,21	0,130
7H		6,54	1,01	6,54	8,64	17,08	8,64	0,307	6,04	1,06	6,04	6,43	12,38	6,43	0,301	6,79	0,87	6,84	4,71	7,54	4,54	0,319
11H		15,29	3,18	18,78	9,76	14,29	9,19	0,733	14,48	4,43	15,93	5,95	9,56	5,47	0,694	13,45	3,95	15,47	4,69	6,19	4,22	0,645
11 HT		15,44	3,22	18,97	9,85	14,43	9,28	0,740	14,62	4,47	16,09	6,01	9,66	5,53	0,701	13,59	3,99	15,63	4,74	6,26	4,26	0,651
15		17,58	3,18	18,78	9,55	14,29	9,19	0,825	15,93	4,43	15,93	5,47	9,56	5,47	0,748	15,47	3,95	15,47	4,22	6,19	4,22	0,726
15 HT		17,93	3,22	18,97	9,64	14,43	9,28	0,842	16,25	4,47	16,25	5,53	9,66	5,53	0,763	15,78	3,99	15,63	4,26	6,26	4,26	0,741
5H	15															3,48	1,41	3,48	6,54	8,46	6,54	0,167
7H		7,39	1,16	7,39	9,69	18,62	9,69	0,347	6,93	1,25	6,93	7,16	14,51	7,16	0,345	7,87	1,05	8,69	5,34	10,71	5,12	0,370
11H		5,69	5,69	5,69	15,35	15,35	15,35	0,273	16,65	5,37	18,58	6,61	14,09	5,96	0,798	15,49	4,94	18,96	5,21	9,06	4,37	0,743
11 HT		5,75	5,75	5,75	15,50	15,50	15,50	0,276	16,82	5,42	18,76	6,68	14,23	6,02	0,806	15,64	4,99	19,15	5,26	9,15	4,41	0,750
15		5,69	5,69	5,69	15,35	15,35	15,35	0,267	18,58	5,37	18,58	5,96	14,09	5,96	0,872	17,77	4,94	18,96	4,65	9,06	4,37	0,834
15 HT		5,86	5,75	5,86	15,50	15,50	15,50	0,275	18,76	5,42	18,76	6,02	14,23	6,02	0,898	18,30	4,99	19,15	4,70	9,15	4,41	0,859
5H	18															5,30	1,56	5,30	6,73	9,63	6,73	0,254
7H		8,20	2,85	8,20	10,54	19,58	10,54	0,385	7,74	1,67	7,74	7,80	16,07	7,80	0,386	9,05	1,46	9,71	5,73	12,82	5,48	0,425
11H		5,99	5,99	5,99	17,96	17,96	17,96	0,287	17,83	5,81	19,90	7,06	16,22	6,34	0,855	16,59	5,41	20,30	5,55	12,18	4,61	0,795
11 HT		6,05	6,05	6,05	18,14	18,14	18,14	0,290	18,01	5,87	20,10	7,13	16,38	6,40	0,863	16,75	5,46	20,50	5,60	12,31	4,66	0,803
15		5,99	5,99	5,99	17,96	17,96	17,96	0,287	19,90	5,81	19,90	6,34	18,25	6,34	0,934	19,02	5,41	20,30	4,91	12,18	4,61	0,893
15 HT		6,05	6,05	6,05	18,14	18,14	18,14	0,290	20,10	5,87	20,10	6,40	18,43	6,40	0,962	19,59	5,46	20,50	4,96	12,31	4,66	0,920

Key

LWT Water outlet temperature, °C
Cc Cooling capacity kW
Nom Nominal
Min Minimum
Max Maximum
EER Coefficient of performance, kW/kW
q Evaporator water flow rate, l/s

Application data

Standard units, refrigerant: R-410A
Condenser water outlet or water inlet temperature difference: 5 K
Condenser fluid: water
Fouling coefficient: 0 m² k/W
Established performance as per EN 14511

EUROVENT CERTIFIED PERFORMANCE
www.eurovent-certification.com

Cooling mode selection table

EREBA He

EREBA He	LWT °C	Outside air dry temperature, °C													
		35							45						
		Cc			EER			q	Cc			EER			q
		kW			kW/kW			l/s	kW			kW/kW			l/s
		Nom	Min	Max	Nom	Min	Max	Nom	Nom	Min	Max	Nom	Min	Max	Nom
5H	5	3,69	0,80	3,75	2,81	4,56	2,77	0,177	1,87	0,66	1,87	2,00	3,45	2,00	0,090
7H		4,86	0,42	5,39	2,93	3,41	2,77	0,228	1,96	0,36	1,96	2,00	2,44	2,00	0,092
11H		9,52	2,27	12,88	2,95	3,00	2,89	0,456	6,80	3,05	6,80	2,23	2,30	2,23	0,326
11 HT		9,61	2,29	13,01	2,98	3,03	2,92	0,461	6,87	3,08	6,87	2,26	2,32	2,26	0,329
15		12,02	2,27	12,88	2,91	3,00	2,89	0,564	6,80	3,05	6,80	2,23	2,30	2,23	0,319
15 HT		12,14	2,29	13,01	2,94	3,03	2,92	0,570	6,87	3,08	6,87	2,26	2,32	2,26	0,323
5H	7	4,00	0,89	4,09	3,10	4,92	2,95	0,193	2,13	0,75	2,13	2,14	3,70	2,38	0,102
7H		5,55	0,50	5,95	3,10	3,85	2,94	0,265	2,23	0,44	2,23	2,28	2,77	2,28	0,105
11H		11,20	2,61	13,70	3,40	3,45	2,98	0,538	7,93	3,53	7,93	2,50	2,64	2,50	0,380
11 HT		10,65	2,64	13,84	3,40	3,48	3,01	0,544	8,00	3,57	8,00	2,52	2,67	2,52	0,384
15		12,80	2,61	13,70	3,10	3,45	2,98	0,594	7,93	3,53	7,93	2,50	2,64	2,50	0,372
15 HT		13,00	2,64	13,84	3,20	3,48	3,01	0,614	8,00	3,57	8,00	2,52	2,67	2,52	0,380
5H	10	4,27	1,03	4,39	3,35	5,46	3,25	0,205	2,20	0,87	2,20	2,64	4,06	2,64	0,105
7H		5,98	0,63	6,70	3,35	4,50	3,18	0,281	2,46	0,55	2,46	2,53	3,28	2,53	0,116
11H		12,15	3,21	15,02	3,53	3,62	3,15	0,583	8,47	4,00	8,47	2,74	2,75	2,74	0,406
11 HT		12,28	3,25	15,17	3,57	3,66	3,18	0,589	8,55	4,04	8,55	2,77	2,77	2,77	0,410
15		14,04	3,21	15,02	3,31	3,62	3,15	0,659	8,47	4,00	8,47	2,74	2,75	2,74	0,397
15 HT		14,32	3,25	15,17	3,38	3,66	3,18	0,672	8,55	4,04	8,55	2,77	2,77	2,77	0,405
5H	15	4,48	1,26	5,31	3,89	6,36	3,73	0,215	2,59	1,08	2,59	3,12	4,67	3,12	0,124
7H		6,99	0,84	7,75	3,77	5,58	3,60	0,328	2,96	0,74	2,96	3,10	4,12	3,10	0,135
11H		14,05	4,25	17,24	3,94	5,42	3,46	0,674	9,75	4,82	9,75	3,19	3,15	3,19	0,467
11 HT		14,19	4,29	17,42	3,98	5,47	3,50	0,680	9,85	4,87	9,85	3,22	3,18	3,22	0,472
15		16,15	4,25	17,24	3,65	5,42	3,46	0,758	9,75	4,82	9,75	3,19	3,15	3,19	0,458
15 HT		16,63	4,29	17,42	3,76	5,47	3,50	0,781	9,85	4,87	9,85	3,22	3,18	3,22	0,471
5H	18	4,85	1,40	5,50	4,35	6,89	4,01	0,232	2,85	1,20	2,85	3,33	5,04	3,33	0,137
7H		8,00	0,97	8,72	4,00	6,24	3,84	0,381	2,31	2,31	2,31	3,53	3,53	3,53	0,102
11H		13,70	4,74	18,46	4,60	7,02	3,65	0,658	10,58	5,42	10,58	3,45	3,75	3,45	0,507
11 HT		13,75	4,79	18,64	4,65	7,09	3,68	0,665	10,68	5,47	10,68	3,48	3,79	3,48	0,512
15		16,00	4,74	18,46	4,10	7,02	3,65	0,756	10,58	5,42	10,58	3,45	3,75	3,45	0,497
15 HT		17,00	4,79	18,64	4,15	7,09	3,68	0,786	10,68	5,47	10,68	3,48	3,79	3,48	0,511

Key

LWT	Water outlet temperature, °C
Cc	Cooling capacity, kW
Nom	Nominal
Min	Minimum
Max	Maximum
EER	Coefficient of performance, kW/kW
q	Evaporator water flow rate, l/s

Application data

Standard units, refrigerant: R-410A
Condenser water outlet or water inlet temperature difference: 5 K
Condenser fluid: water
Fouling coefficient: 0 m² k/W
Established performance as per EN 14511

EUROVENT CERTIFIED PERFORMANCE
www.eurovent-certification.com

1

EREBA ACCESS

Air-Cooled Liquid Chillers and
Reversible Air-to-Water Heat Pumps

Easy and fast installation

Hydraulic module available

Compact, reliable and efficient

Nominal cooling capacity : 16-39 kW

Nominal heating capacity: 18-39 kW

Cooling or heating

Use

The **EREBA ACCESS** air-to-water heat pump / chiller is designed for heating and cooling applications in individual homes and small commercial applications.

When installed alone, EREBA ACCESS is compatible with low to medium temperature emitters (underfloor heating, fan coil units, water cassettes, radiators, mixed installations, etc.). EREBA ACCESS is also compatible with medium to high temperature emitters for boiler backup operation.

The EREBA ACCESS unit is installed outside in an open area, ideally as close as possible to the machine room.

Each unit is tested in the factory and delivered ready for operation.

- End-of-line test of all unit operating parameters.
- Circuit leakage, electrical compliance, water and refrigerant pressures.

Range

EREBA ACCESS's range is composed by 5 models in cooling only and 5 models reversible.

Operating range EREBA ACCESS :

- Cooling mode with an outdoor temperature from -10°C to 46°C (or 48°C for 17-40 models)
- Heating from -15°C to +40°C.

In heating mode, if the heat pump is not powerful enough, a backup type boiler or electrical heater is necessary. It must be managed by an external device.

Compliance

Low Voltage Directive 2014/35/EU

EMC : Electromagnetic Compatibility 2014/30/EU

PED : Pressure Equipment Directive 2014/6/EU

WEEE : Waste Electrical & Electronic Equipment 2012/19/EU

RoHS : Restriction of Hazardous Substances Directive 2011/65/EU

EREBA ACCESS

Air-Cooled Liquid Chillers and
Reversible Air-to-Water Heat Pumps

The **EREBA ACCESS** liquid chiller/heat pump range was designed for commercial applications such as the air conditioning of offices, hotels and residential houses.

The units integrate the latest technological innovations: Non-ozone depleting refrigerant R410A, scroll or rotary compressors, low-noise fans and auto-adaptative microprocessor control.

For added flexibility the EREBA ACCESS units are available with hydraulic module integrated into the unit chassis, limiting the installation to straightforward operations like connection of the power supply and the water supply and return piping.

Features

The EREBA ACCESS chiller/heat pump systems can be used with a wide choice of CIAT terminal fan coil units, and ductable products.

Ecodesign is the European Directive that sets mandatory requirements for Energy related Products (ErP) to improve their energy efficiency.

Quiet operation

■ Compressors

- Low-noise rotary/scroll compressor with low vibration levels and maintenance free.

■ Air heat exchanger section

- Vertical air heat exchanger coils
- The latest-generation low-noise fans are now even quieter and do not generate intrusive low-frequency noise
- Rigid fan installation for reduced start-up noise.

Easy and fast installation

■ Integrated hydraulic module

- Fixed-speed pump (sizes 17-40).
- Water filter protecting the water pump against circulating debris
- High-capacity membrane expansion tank ensures pressurisation of the water circuit
- Overpressure valve, set to 3 bar (and 4 bar for 17-40)
- Thermal insulation and frost protection down to -10°C using pump cycling for all sizes and electric resistance heater for sizes 17 to 40 .

■ Physical features

- Advanced circuit design and component selection has resulted in a compact unit with an exceptionally small footprint that is easy to transport even through narrow doors. Reduced operating weight and a handle on the unit panels to facilitate transport.
- The unit is enclosed by easily removable panels, covering all components (except air heat exchanger and fans).
- A neutral colour (RAL 7035) to facilitate the integration in residential area

■ Simplified electrical connections

- Single power supply point.
- Main disconnect switch with high trip capacity (sizes 17-40).
- Transformer for safe 24 V control circuit supply included.

Economical operation

■ Increased seasonal efficiency

- In accordance with EN 14825:2013, Average Climate, energy label reach A and B (see physical data).
- Specific Free Defrost algorithm is present to optimise performance and comfort even during defrost period.

■ Reduced maintenance costs

- Maintenance-free scroll or rotary compressors
- Fast diagnosis of possible incidents and their history via the Pro-Dialog+ control.
- R410A refrigerant is easier to use than other refrigerant blends

Environmental care

■ Ozone-friendly R410A refrigerant

- Chlorine-free refrigerant of the HFC group with zero ozone depletion potential
- Very efficient - gives an increased energy efficiency ratio (EER)

■ Leak-tight refrigerant circuit

- Brazed refrigerant connections for increased leak-tightness.
- Verification of pressure transducers and temperature sensors without transferring refrigerant charge

Superior reliability

■ Auto-adaptive control

- Control algorithm prevents excessive compressor cycling and permits reduction of the water quantity in the hydraulic circuit.

■ Exceptional endurance tests

- Corrosion resistance tests in salt mist in the laboratory
- Accelerated ageing test on components that are submitted to continuous operation: compressor piping, fan supports
- Transport simulation test in the laboratory on a vibrating table.

Pro-Dialog+

Pro-Dialog+ control for models 17-40

Pro-Dialog+ combines intelligence with operating simplicity. The control constantly monitors all machine parameters and precisely manages the operation of compressors, expansion devices, fans and of the water heat exchanger water pump for optimum energy efficiency.

Pro-Dialog+ interface

Energy management

- Seven-day internal time schedule clock: Permits unit on/off control and operation at a second set point
- Set point reset based on the outside air temperature or the return water temperature or on the water heat exchanger delta T
- Master/slave control of two units operating in parallel with operating time equalisation and automatic change-over in case of a unit fault.
- Change-over based on the outside air temperature

- Integrated features
  - Night mode: Capacity and fan speed limitation for reduced noise level
- Ease-of-use
  - The new backlit LCD interface includes a manual control potentiometer to ensure legibility under any lighting conditions.
  - The information is displayed clearly in English, French, German, Italian and Spanish (for other languages please consult CIAT)
  - The Pro-Dialog+ navigation uses intuitive tree-structure menus, similar to the Internet navigators. They are user-friendly and permit quick access to the principal operating parameters: number of compressors operating, suction/discharge pressure, compressor operating hours, set point, air temperature, entering/leaving water temperature.

Remote operating mode with volt-free contacts

A simple two-wire communication bus between the RS485 port of the unit offers multiple remote control, monitoring and diagnostic possibilities.

- Start/stop: Opening of this contact will shut down the unit
- Dual set point: Closing of this contact activates a second set point (example: Unoccupied mode)
- Alert indication: This volt-free contact indicates the presence of a minor fault (sizes 17-40 only)
- Alarm indication: This volt-free contact indicates the presence of a major fault that has led to the shut-down of the unit
- User safety: This contact can be used for any customer safety loop, closing of the contact generates a specific alarm
- Out of service: This signal indicates that the unit is completely out of service (sizes 17-40 only)
- Unit capacity: This analogue output (0-10 V) gives an immediate indication of the unit capacity (sizes 17-40 only)
- Compressor operation: This contact signals that the compressor is in operation (sizes 17-40 only)

45

PHYSICAL DATA

EREBA ACCESS Cooling only				17T	21T	26T	33T	40T
Cooling								
Standard unit		Nominal capacity	kW	16,4	21,4	27,2	33,2	41,2
Full load performances*	CA1	EER	kW/kW	3,01	3,12	3,04	3,24	2,91
		Eurovent class		B	A	B	A	B
	CA2	Nominal capacity	kW	22,7	29,5	38,4	45,5	56,6
		EER	kW/kW	3,83	3,88	3,94	4,03	3,45
Standard unit		**SEPR $_{-2/-8°C}$ Process medium temp.**	**kWh/kWh**	**2,91**	**3,02**	**3,10**	**3,00**	**3,05**
Seasonal energy efficiency**		SEPR $_{12/7°c}$ Process high temp.	kWh/kWh	5,22	5,29	5,01	5,06	4,95
		SEER $_{12/7°c}$ Comfort low temp.	kWh/kWh	3,41	3,51	3,25	3,46	3,30
		SEER $_{23/18°c}$ Comfort medium temp.	kWh/kWh	4,22	4,12	3,83	3,88	3,74

*	In accordance with standard EN 14511-3:2013.
**	In accordance with standard EN 14825:2016, average climate
CA1	Cooling mode conditions: Temperature of the supply/return water to/from the evaporator 12 °C/7 °C, outdoor air temperature 35 °C. Evaporator fouling factor 0 m² k/W
CA2	Cooling mode conditions: Temperature of the supply/return water to/from the evaporator 23 °C/18 °C, outdoor air temperature 35 °C. Evaporator fouling factor 0 m² k/W.
SEPR $_{-2/-8°C}$	**Values in bold comply with Ecodesign Regulation (EU) No. 2015/1095 for Process application**
SEER $_{12/7\ °C}$ & SEPR $_{12/7\ °C}$	Values calculated in accordance with EN 14825:2016
SEER $_{23/18\ °C}$	Values calculated in accordance with EN 14825:2016

EUROVENT CERTIFIED PERFORMANCE
www.eurovent-certification.com

Eurovent certified values

PHYSICAL DATA

EREBA ACCESS Reversible				17HT	21HT	26HT	33HT	40HT
Heating								
Standard unit	HA1	Nominal capacity	kW	17,6	22,0	30,9	34,4	38,8
Full load performances*		COP	kW/kW	4,02	3,99	3,94	3,95	3,48
	HA2	Nominal capacity	kW	17,0	21,4	29,7	33,1	40,9
		COP	kW/kW	3,20	3,28	3,18	3,17	3,13
Standard unit	HA1	**SCOP $_{30/35°c}$**		**3,20**	**3,23**	**3,19**	**3,19**	**3,19**
Seasonal energy efficiency**		**ηs heat $_{30/35°c}$**	**%**	**125**	**126**	**125**	**125**	**125**
		P_{rated}	kW	13	13	21	23	31
		Energy labelling		A+	A+	A+	A+	A+
Cooling								
Standard unit	CA1	Nominal capacity	kW	15,7	19,9	26,2	32,2	39,1
Full load performances*		EER	kW/kW	3,06	3,04	2,89	3,11	2,81
		Eurovent class		B	B	C	A	C
	CA2	Nominal capacity	kW	21,9	27,0	33,9	42,8	54,0
		EER	kW/kW	3,96	3,72	3,52	3,83	3,37
Standard unit		SEPR $_{12/7°c}$ Process high temp.	kWh/kWh	5,30	5,19	4,79	4,97	3,84
Seasonal energy efficiency**		SEER $_{12/7°c}$ Comfort low temp.	kWh/kWh	3,45	3,40	3,17	3,38	3,20
		SEER $_{23/18°c}$ Comfort medium temp.	kWh/kWh	4,32	3,99	3,68	3,85	3,67

*	In accordance with standard EN 14511-3:2013.
**	In accordance with standard EN 14825:2016, average climate
HA1	Heating mode conditions: Water heat exchanger water entering/leaving temperature 30 °C/35 °C, outside air temperature tdb/twb = 7 °C db/6 °C wb, evaporator fooling factor 0 m² k/W
HA2	Heating mode conditions: Water heat exchanger water entering/leaving temperature 40 °C/45 °C, outside air temperature tdb/twb = 7 °C db/6 °C wb, evaporator fooling factor 0 m² k/W
CA1	Cooling mode conditions: Temperature of the supply/return water to/from the evaporator 12 °C/7 °C, outdoor air temperature 35 °C. Evaporator fouling factor 0 m² k/W
CA2	Cooling mode conditions: Temperature of the supply/return water to/from the evaporator 23 °C/18 °C, outdoor air temperature 35 °C. Evaporator fouling factor 0 m² k/W.
ηs heat $_{30/35\,°c}$ & SCOP $_{30/35\,°c}$	**Values in bold comply with Ecodesign Regulation (EU) No. 813/2013 for heating application**
SEER $_{12/7\,°C}$ & SEPR $_{12/7\,°C}$	Values calculated in accordance with EN 14825:2016
SEER $_{23/18\,°C}$	Values calculated in accordance with EN 14825:2016

EUROVENT CERTIFIED PERFORMANCE
www.eurovent-certification.com

Eurovent certified values

1

PHYSICAL DATA

EREBA ACCESS			Cooling only					Reversible				
			17T	21T	26T	33T	40T	17HT	21HT	26HT	33HT	40HT
Sound power level(1)		dB(A)	72	74	78	78	80	72	74	78	78	80
Sound pressure level at 10 m(2)		dB(A)	40	42	46	46	48	40	42	46	46	48
Length		mm	1136		1002			1136		1002		
Width		mm	584		824			584		824		
Height		mm	1580		1790			1580		1790		
Operating weight(3)		kg	189	208	255	280	291	206	223	280	295	305
Compressors			Scroll									
Refrigerant R410A charge(3)		kg	5,5	6,4	5,8	8,6	8,8	6,4	7,7	7,6	9,5	9,8
		CO_2 eq	11,5	13,4	12,1	18	18,4	13,4	16,1	15,9	19,9	20,5
Air heat exchanger			Grooved copper tubes, aluminium fins									
Axial Fans			2 twin-speed		1 twin-speed			2 twin-speed		1 twin-speed		
Diameter		mm	495		710			495		710		
Air flow		l/s	2212		3530			2217	1978	3530		
Water Heat Exchanger			Brazed plate									
Water volume		L	1,52	1,9	2,28	2,85	3,8	1,52	1,9	2,28	2,85	3,8
Expansion tank volume		L	5		8			5		8		
Pump			Fixed speed									
Available static pressure	**C1/H1**	kPa	152	126	174	160	188	148	130	188	176	187
Available static pressure	**C2/H2**	kPa	110	71	78	56	106	152	134	197	186	193
Minimum system water content		l	58	75	96	117	145	56	71	94	115	140
Max. water-side operating pressure		kPa	400									
Outlet diameter			1"1/4 G male									
Chassis paint colour												

(1) In dB ref=10^{-12} W, (A) weighting. Declared dual-number noise emission values in accordance with ISO 4871 (with an associated uncertainty of +/-3 dB(A)). Measured in accordance with ISO 9614-1 and certified by Eurovent.
(2) In dB ref 20 µPa, (A) weighting. Declared dual-number noise emission values in accordance with ISO 4871 (with an associated uncertainty of +/-3 dB(A)). For information, calculated from the sound power level Lw(A).
(3) Values are guidelines only. Refer to the unit nameplate.

ELECTRICAL DATA

EREBA ACCESS		17	21	26	33	40
Nominal power supply	V-ph-Hz	400-3+N-50				400-3-50
Voltage range	V	340-460				360-440
Control circuit supply		24 V via internal transformer				
Maximum start-up current (Un)(1)	A	75	95	118	118	176
Unit power factor at nominal capacity(2)		0,84	0,79	0,77	0,81	0,9
Maximum operating power input(2)	kW	7,8	9,1	11	13,8	17,5
Nominal unit operating current drawn(3)	A	8	12	16	17	25
Maximum operating current draw (Un)(4)	A	13	16	20	24	30
Maximum operating current draw (Un-15%)(5)	A	15	18	23	27	36
Power fuse current (gL fuse)	A	25	32	40	50	63
Power supply cable section		H07RN-F - 5x6mm²		H07RN-F - 5x16mm²		H07RN-F - 4x16mm²
Pump - power input(6)	kW	0,54	0,59	0,99	1,1	1,2
Pump - nominal operating current draw(6)	A	1,3	1,4	2,4	2,6	2,8
Pump - maximum current (external pump)	A	1,5		2,5		2,4
Number of fan motor capacitors (5 µF/450 V)		2	2	0	0	0
Remote controller - Power supply cable section		H03VV-F - 7x0.5mm²				

(1) Maximum instantaneous start-up current (locked rotor current of the compressor).
(2) Power input, compressors and fans, at the unit operating limits (saturated suction temperature 10°C, saturated condensing temperature 65°C) and nominal voltage of 400V (data given on the unit nameplate)
(3) Standardised Eurovent conditions: water heat exchanger entering/leaving water temperature 12 °C/7 °C, outside air temperature 35 °C.
(4) Maximum unit operating current at maximum unit power input and 400 V (data given on the unit nameplate).
(5) Maximum unit operating current at maximum unit power input and 340-460 V for sizes 017 to 033 or 360-440 V for size 040.
(6) Gross performances.

PART-LOAD PERFORMANCES

■ SEER for comfort chillers (in accordance with EU ECODESIGN)

The **SEER** (**S**easonal **E**nergy **E**fficiency **R**atio) measures the seasonal energy efficiency of comfort **chillers** by calculating the ratio between annual cooling demand of the building and annual energy demand of the chiller. It takes into account the energy efficiency achieved for each outdoor temperature weighted by the number of hours observed for each of these temperatures, using actual climate data.

SEER is a new way of measuring the true energy efficiency of chillers for **comfort cooling** over an entire year. This new indicator gives a more realistic indication of the real energy efficiency and environmental impact of a cooling system. (Ecodesign Regulation 2016/2281).

Low temperature comfort application with 30RB008-015 not allowed in European Union, Iceland, Norway, Liechtenstein and Turkey according to Ecodesign Regulation (EU) No. 2016/2281. Refer to above PSD table to see specific applications compliant with ecodesign regulation.

■ SEPR for process chillers (in accordance with EU ECODESIGN)

The **SEPR** (**S**easonal **E**nergy **P**erformance **R**atio) measures the seasonal energy efficiency of **process chillers** by calculating the ratio between annual cooling demand of the process and annual energy demand of the chiller. It takes into account the energy efficiency achieved at each outdoor temperature of an average climate weighted by the number of hours observed for each of these temperatures.

SEPR is a new way of measuring the true energy efficiency of chillers for **process cooling** over an entire year. This new indicator gives a more realistic indication of the real energy efficiency and environmental impact of the cooling system (Ecodesign Regulation 2015/1095).

Dimensions (in mm)

■ EREBA ACCESS 17-21

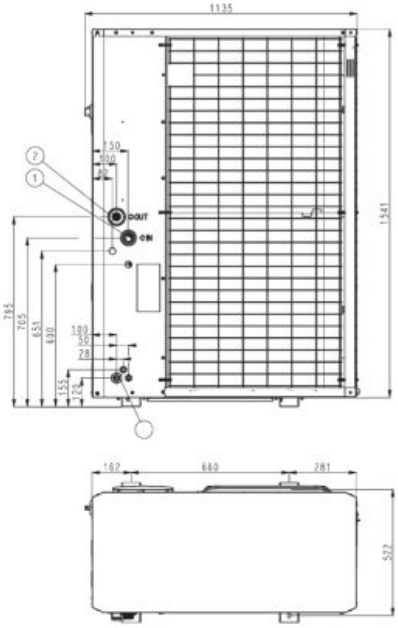

■ EREBA ACCESS 26-40

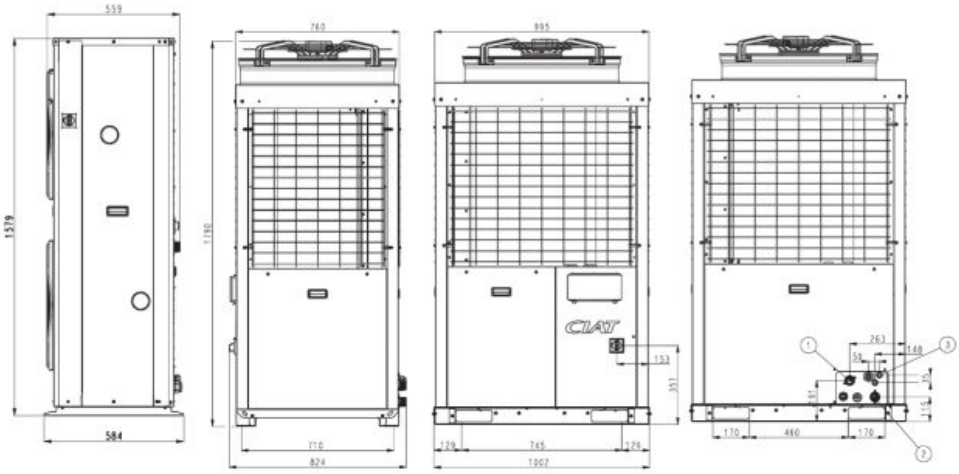

Key
All dimensions are given in mm
1. Water inlet
2. Water outlet
3. Power connections
Mounting holes (ø10 mm)

Weight (in kg)		
EREBA ACCESS	Operating weight*	
	Cooling only (T)	Reversible (HT)
17	189	206
21	208	223
26	255	280
33	280	295
40	291	305

* Values are guidelines only. Refer to the unit nameplate

CLEARANCES (IN MM)

■ EREBA ACCESS 17-21

Single unit installation

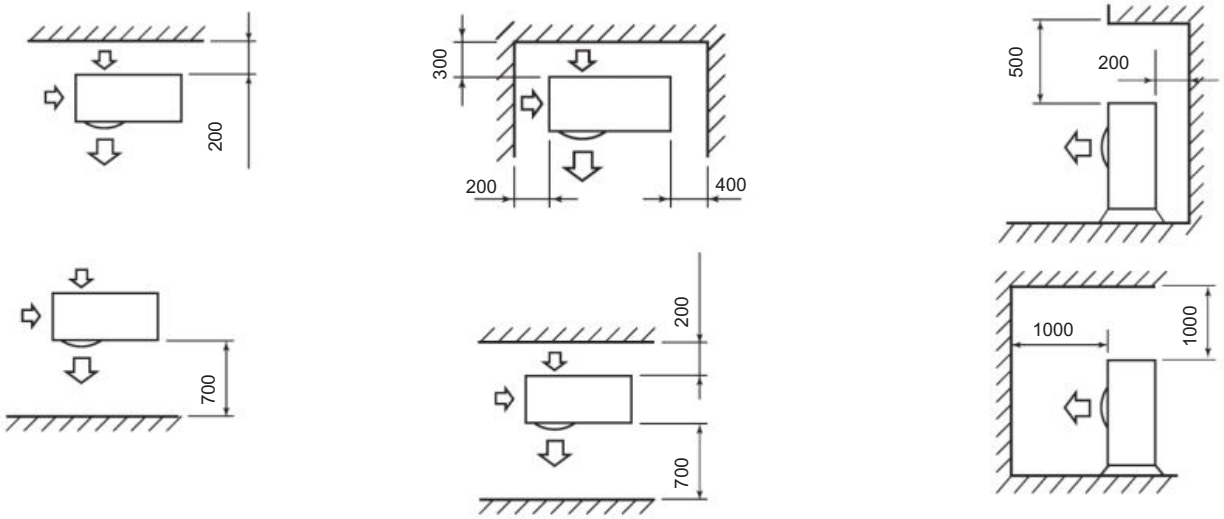

Multiple unit installation

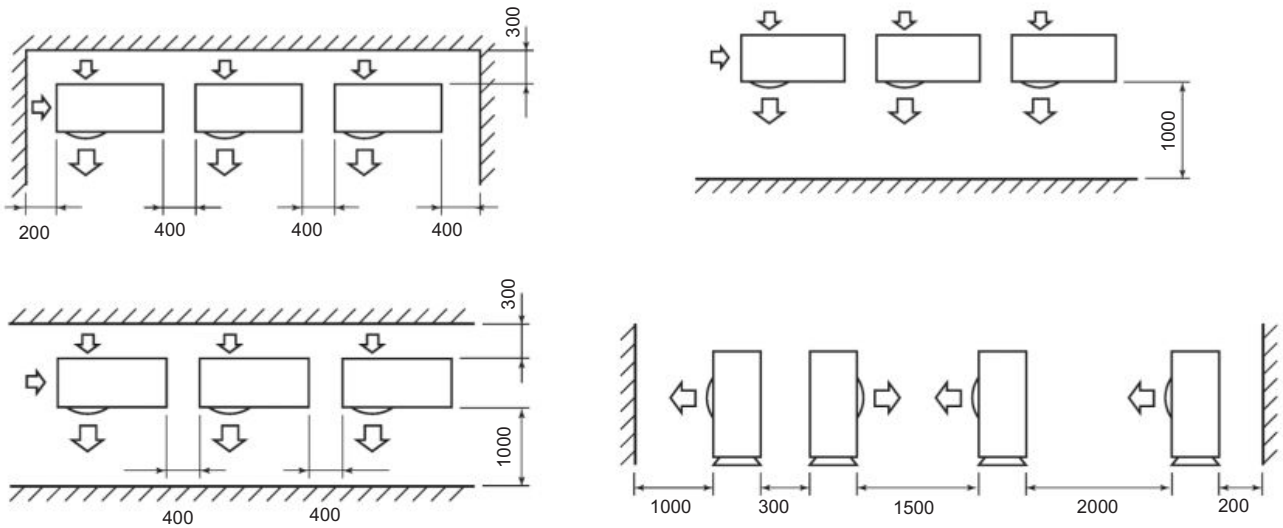

Note: The height of any obstacle at both the front and rear should be less than the outdoor unit height.

■ EREBA ACCESS 26-40

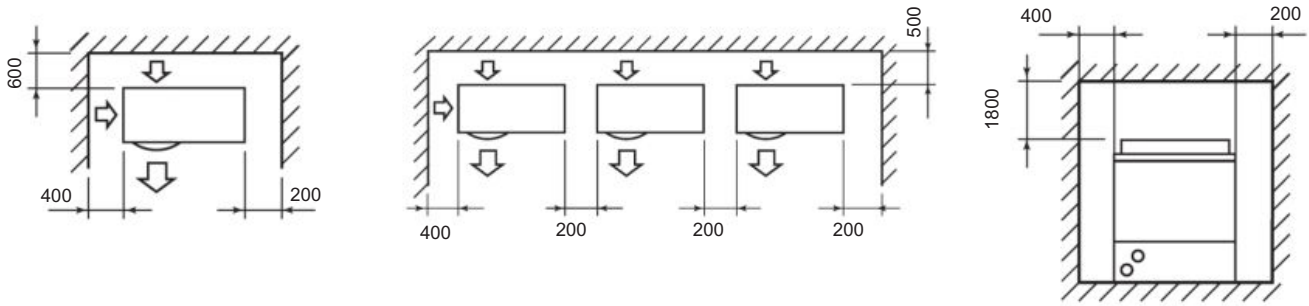

HEATING CAPACITIES IN ACCORDANCE WITH EN14511-3

		Outside air dry-bulb (wet-bulb) temperature, °C																							
		-15 (-16)				-10 (-11)				-7 (-8)				2 (1)				7 (6)				12 (11)			
	LWT	Qh	COP	q	ESP	Qh	COP	q	ESP	Qh	COP	q	ESP	Qh	COP	q	ESP	Qh	COP	q	ESP	Qh	COP	q	ESP
	°C	kW	kW/kW	l/s	kPa	kW	kW/kW	l/s	kPa	kW	kW/kW	l/s	kPa	kW	kW/kW	l/s	kPa	kW	kW/kW	l/s	kPa	kW	kW/kW	l/s	kPa
017	30	7,6	2,02	0,47	189	8,6	2,26	0,54	182	9,2	2,41	0,58	178	10,9	3,93	0,74	160	17,9	4,46	0,85	146	20,4	4,97	0,97	129
021		9,6	1,98	0,60	178	10,7	2,20	0,68	171	11,5	2,35	0,73	165	14,8	4,04	0,93	144	17,8	4,24	1,06	128	25,4	4,86	1,21	109
026		14,8	2,21	0,81	264	16,9	2,48	0,93	252	18,2	2,66	1,01	244	21,2	3,80	1,30	211	24,8	4,10	1,48	187	35,6	4,81	1,69	157
033		16,8	2,26	0,92	258	19,0	2,52	1,05	246	20,4	2,68	1,13	237	23,7	3,79	1,45	200	27,7	4,08	1,66	174	39,9	4,80	1,89	140
040		-	-	-	-	23,6	2,51	1,30	248	25,5	2,67	1,41	240	28,4	3,57	1,79	208	39,4	3,79	2,05	185	49,2	4,58	2,34	155
017	35	7,7	1,86	0,47	189	8,7	2,08	0,54	182	9,3	2,21	0,58	178	10,7	3,53	0,74	161	17,6	4,02	0,84	149	20,1	4,49	0,96	133
021		9,7	1,85	0,60	178	10,8	2,06	0,68	171	11,6	2,20	0,73	166	14,7	3,71	0,92	145	22,0	3,99	1,05	131	25,1	4,42	1,20	112
026		14,9	2,02	0,80	264	16,9	2,27	0,92	253	18,2	2,44	1,00	246	20,9	3,45	1,28	214	30,9	3,94	1,47	190	35,2	4,38	1,67	161
033		16,8	2,08	0,91	259	19,1	2,33	1,05	246	20,6	2,48	1,13	238	23,4	3,46	1,44	203	34,4	3,95	1,64	178	39,3	4,38	1,87	145
040		-	-	-	-	23,8	2,33	1,29	248	25,7	2,49	1,40	240	28,0	3,28	1,77	210	38,8	3,48	2,02	188	48,4	4,20	2,30	159
017	40	-	-	-	-	8,8	1,90	0,54	183	9,4	2,03	0,58	178	10,6	3,17	0,73	163	17,3	3,59	0,83	151	19,7	4,01	0,94	136
021		-	-	-	-	11,0	1,90	0,68	171	11,8	2,03	0,73	166	14,6	3,38	0,92	147	21,7	3,64	1,04	133	24,7	4,04	1,18	115
026		-	-	-	-	17,0	2,08	0,92	254	18,3	2,22	0,99	247	20,6	3,10	1,27	216	30,3	3,56	1,44	194	34,6	3,97	1,65	166
033		-	-	-	-	19,2	2,13	1,04	247	20,7	2,28	1,12	239	23,0	3,12	1,42	206	33,9	3,56	1,61	182	38,6	3,97	1,84	151
040		-	-	-	-	24,0	2,14	1,29	248	25,8	2,29	1,39	241	27,6	3,00	1,75	212	41,6	3,46	1,99	191	47,5	3,83	2,26	164
017	45	-	-	-	-	-	-	-	-	9,6	1,88	0,58	179	10,5	2,85	0,72	164	17,0	3,20	0,81	153	19,3	3,57	0,92	139
021		-	-	-	-	-	-	-	-	12,0	1,88	0,73	167	14,5	3,05	0,91	148	21,4	3,28	1,03	135	24,3	3,65	1,16	118
026		-	-	-	-	-	-	-	-	18,5	2,04	0,98	248	20,2	2,78	1,24	219	29,7	3,18	1,42	199	33,9	3,56	1,61	172
033		-	-	-	-	-	-	-	-	20,7	2,08	1,10	241	22,6	2,79	1,39	210	33,1	3,17	1,58	187	37,7	3,55	1,80	158
040		-	-	-	-	-	-	-	-	26,3	2,12	1,39	241	27,4	2,73	1,74	214	40,9	3,13	1,95	195	46,5	3,46	2,22	169
017	50	-	-	-	-	-	-	-	-	-	-	-	-	11,2	2,50	0,71	165	16,7	2,86	0,80	155	18,8	3,17	0,90	142
021		-	-	-	-	-	-	-	-	-	-	-	-	13,3	2,30	0,90	149	21,1	2,92	1,01	137	23,8	3,26	1,14	122
026		-	-	-	-	-	-	-	-	-	-	-	-	20,6	2,38	1,22	222	29,0	2,82	1,38	203	32,9	3,15	1,57	179
033		-	-	-	-	-	-	-	-	-	-	-	-	23,0	2,40	1,36	214	32,1	2,80	1,53	194	36,3	3,12	1,73	168
040		-	-	-	-	-	-	-	-	-	-	-	-	28,2	2,37	1,72	215	40,2	2,83	1,93	197	45,3	3,11	2,17	174

Key

LWT	Leaving water temperature,°C
Qh	Heating capacity, kW
COP	Coefficient of performance, kW/kW
q	Condenser water flow rate, l/s
ESP	External Static Pressure, kPa

Application data

Standard units, refrigerant: R-410A
Condenser entering/leaving water temperature difference: 5 K for LWT ≤ 50°C
Condenser fluid: water
Fouling factor: 0 m^2 k/W
Performances in accordance with EN14511-3:2013.

EUROVENT CERTIFIED PERFORMANCE
www.eurovent-certification.com

COOLING CAPACITIES IN ACCORDANCE WITH EN14511-3

■ Ereba ACCESS Cooling only 17-40

		Condenser entering air temperature, °C																							
		20				25				30				35				40				46			
	LWT	Qc	EER	q	ESP	Qc	EER	q	ESP	Qc	EER	q	ESP	Qh	EER	q	ESP	Qc	EER	q	ESP	Qc	EER	q	ESP
	°C	kW	kW/kW	l/s	kPa	kW	kW/kW	l/s	kPa	kW	kW/kW	l/s	kPa	kW	kW/kW	l/s	kPa	kW	kW/kW	l/s	kPa	kW	kW/kW	l/s	kPa
017	5	17,7	4,31	0,85	143	17,0	3,82	0,82	148	16,3	3,33	0,78	153	15,5	2,88	0,74	158	14,6	2,48	0,70	163	13,4	2,03	0,65	170
021		22,9	4,30	1,10	115	22,1	3,86	1,06	120	21,2	3,43	1,02	126	20,2	3,00	0,97	133	18,9	2,55	0,91	140	17,1	2,04	0,83	151
026		28,4	4,12	1,38	163	27,6	3,68	1,33	170	26,5	3,26	1,28	179	25,2	2,85	1,22	189	23,6	2,44	1,14	201	21,4	1,97	1,04	216
033		34,5	4,36	1,67	149	33,7	3,91	1,63	155	32,6	3,51	1,57	164	31,2	3,09	1,51	174	29,3	2,66	1,41	188	26,5	2,18	1,28	207
040		45,0	4,03	2,17	169	43,1	3,60	2,07	179	41,0	3,19	1,97	189	38,7	2,80	1,86	200	36,2	2,42	1,74	211	32,8	1,99	1,58	225
017	7	18,7	4,49	0,90	137	18,0	3,99	0,87	142	17,2	3,48	0,83	147	16,4	3,01	0,79	152	15,5	2,59	0,75	158	14,2	2,13	0,69	165
021		24,3	4,47	1,17	106	23,5	4,02	1,13	112	22,5	3,57	1,08	118	21,4	3,12	1,03	126	20,1	2,67	0,97	134	18,2	2,14	0,88	145
026		30,5	4,35	1,48	146	29,7	3,89	1,44	154	28,5	3,46	1,38	163	27,2	3,04	1,32	174	25,5	2,61	1,23	187	23,1	2,12	1,12	205
033		36,8	4,56	1,78	131	35,9	4,09	1,74	138	34,6	3,68	1,67	149	33,2	3,24	1,60	160	31,2	2,80	1,51	175	28,3	2,29	1,37	195
040		47,9	4,18	2,31	155	45,9	3,74	2,21	165	43,7	3,32	2,10	176	41,2	2,91	1,99	188	38,6	2,53	1,86	201	35,0	2,08	1,69	216
017	10	20,4	4,77	0,98	125	19,7	4,25	0,95	131	18,8	3,72	0,91	137	17,9	3,22	0,86	143	16,9	2,78	0,81	150	15,6	2,29	0,75	158
021		26,5	4,73	1,28	92	25,6	4,26	1,24	98	24,6	3,80	1,19	105	23,4	3,33	1,13	114	21,9	2,85	1,06	123	19,9	2,29	0,96	136
026		33,8	4,67	1,64	119	32,8	4,19	1,59	128	31,6	3,75	1,53	139	30,1	3,30	1,46	151	28,3	2,85	1,37	167	25,7	2,33	1,25	187
033		40,2	4,82	1,95	103	39,2	4,35	1,90	112	37,9	3,92	1,84	123	36,3	3,47	1,76	136	34,3	3,01	1,66	153	31,2	2,48	1,51	176
040		52,4	4,38	2,53	130	50,2	3,93	2,42	143	47,8	3,49	2,31	156	45,2	3,08	2,18	169	42,3	2,68	2,04	183	38,5	2,23	1,86	201
017	15	23,7	5,26	1,15	101	22,9	4,72	1,11	108	21,9	4,14	1,06	116	20,8	3,60	1,01	124	19,7	3,12	0,95	132	-	-	-	-
021		30,7	5,14	1,49	61	29,7	4,65	1,44	69	28,5	4,18	1,38	78	27,2	3,69	1,31	89	25,5	3,18	1,23	101	-	-	-	-
026		39,5	5,13	1,93	66	38,5	4,65	1,88	76	37,1	4,20	1,81	90	35,4	3,74	1,73	106	33,4	3,27	1,63	125	-	-	-	-
033		46,4	5,20	2,27	46	45,2	4,73	2,21	58	43,7	4,29	2,13	73	42,0	3,84	2,04	89	39,8	3,36	1,94	109	-	-	-	-
040		60,4	4,69	2,93	83	57,9	4,22	2,80	99	55,1	3,75	2,67	115	52,1	3,32	2,52	133	48,9	2,91	2,37	150	-	-	-	-
017	18	25,9	5,54	1,26	84	25,0	4,98	1,21	92	23,9	4,39	1,16	101	22,7	3,83	1,10	110	-	-	-	-	-	-	-	-
021		33,4	5,34	1,62	40	32,3	4,85	1,57	50	31,1	4,38	1,51	60	29,6	3,89	1,43	71	-	-	-	-	-	-	-	-
026		42,8	5,33	2,10	32	41,7	4,86	2,04	45	40,2	4,40	1,97	61	38,5	3,95	1,88	78	-	-	-	-	-	-	-	-
033		50,2	5,33	2,47	7	49,0	4,91	2,40	21	47,4	4,47	2,32	38	45,6	4,03	2,23	56	-	-	-	-	-	-	-	-
040		65,1	4,83	3,16	52	62,5	4,35	3,04	70	59,8	3,89	2,90	87	56,6	3,45	2,75	106	-	-	-	-	-	-	-	-

Key

LWT	Leaving water temperature, °C
Qc	Cooling capacity, kW
EER	Energy efficiency ratio, kW/kW
q	Evaporator water flow rate, l/s
ESP	External Static Pressure, kPa

Application data

Standard units, refrigerant: R-410A
Evaporator entering/leaving water temperature difference: 5K
Evaporator fluid: chilled water
Fouling factor: 0 m^2 k/W
Performances in accordance with EN14511-3:2013.

EUROVENT CERTIFIED PERFORMANCE
www.eurovent-certification.com

1

COOLING CAPACITIES IN ACCORDANCE WITH EN14511-3

■ Ereba ACCESS Reversible 17-40

		Condenser entering air temperature, °C																							
		20				25				30				35				40				46			
	LWT	Qc	EER	q	ESP	Qc	EER	q	ESP	Qc	EER	q	ESP	Qh	EER	q	ESP	Qc	EER	q	ESP	Qc	EER	q	ESP
	°C	kW	kW/kW	l/s	kPa	kW	kW/kW	l/s	kPa	kW	kW/kW	l/s	kPa	kW	kW/kW	l/s	kPa	kW	kW/kW	l/s	kPa	kW	kW/kW	l/s	kPa
017	5	17,0	4,37	0,82	147	16,4	3,89	0,79	151	15,6	3,38	0,75	156	14,8	2,92	0,71	161	14,0	2,50	0,67	166	12,8	2,05	0,62	172
021		21,2	4,17	1,02	125	20,5	3,72	0,99	130	19,7	3,32	0,95	135	18,8	2,91	0,90	141	17,6	2,49	0,85	148	15,9	2,00	0,77	157
026		27,6	3,98	1,34	194	26,8	3,54	1,29	200	25,8	3,14	1,24	207	24,6	2,75	1,19	215	23,1	2,36	1,12	224	21,1	1,92	1,02	236
033		34,2	4,26	1,65	160	33,2	3,82	1,60	168	32,0	3,41	1,55	177	30,6	2,98	1,48	187	28,5	2,55	1,38	200	25,8	2,07	1,25	217
040		42,4	3,87	2,04	182	40,7	3,46	1,96	190	38,9	3,07	1,87	199	36,8	2,69	1,77	208	34,6	2,32	1,66	217	31,7	1,91	1,52	229
017	7	18,1	4,57	0,87	140	17,4	4,06	0,84	145	16,6	3,55	0,80	150	15,7	3,06	0,76	155	14,8	2,63	0,71	161	13,6	2,16	0,66	168
021		22,5	4,34	1,08	118	21,7	3,87	1,05	123	20,8	3,46	1,00	128	19,9	3,04	0,96	134	18,6	2,61	0,90	142	16,9	2,10	0,81	152
026		29,4	4,16	1,42	183	28,5	3,71	1,38	189	27,4	3,30	1,33	196	26,2	2,89	1,26	205	24,6	2,49	1,19	215	22,5	2,03	1,09	228
033		36,1	4,43	1,74	147	35,0	3,96	1,69	156	33,7	3,55	1,63	165	32,2	3,11	1,55	176	30,1	2,66	1,45	191	27,4	2,18	1,32	208
040		44,9	4,03	2,16	170	43,1	3,61	2,08	179	41,2	3,20	1,98	188	39,1	2,81	1,88	198	36,7	2,43	1,77	208	33,7	2,01	1,62	221
017	10	19,7	4,86	0,95	129	18,9	4,33	0,91	135	18,1	3,80	0,87	141	17,2	3,29	0,83	147	16,2	2,83	0,78	153	14,9	2,33	0,72	161
021		24,4	4,58	1,18	105	23,6	4,09	1,14	111	22,7	3,67	1,09	117	21,7	3,23	1,04	124	20,3	2,79	0,98	132	18,5	2,26	0,89	144
026		32,0	4,41	1,55	164	31,1	3,95	1,51	171	29,9	3,52	1,45	179	28,6	3,10	1,38	189	26,9	2,69	1,30	201	24,6	2,20	1,19	216
033		38,7	4,65	1,88	127	37,6	4,17	1,82	136	36,2	3,74	1,75	147	34,6	3,29	1,68	159	32,5	2,84	1,57	175	29,7	2,33	1,44	194
040		49,0	4,25	2,37	148	47,0	3,81	2,27	159	44,9	3,39	2,16	170	42,6	2,98	2,05	182	40,1	2,60	1,93	193	36,8	2,15	1,77	208
017	15	22,9	5,40	1,11	106	22,1	4,81	1,07	113	21,1	4,26	1,02	120	20,1	3,71	0,97	128	18,9	3,20	0,91	136	-	-	-	-
021		28,2	4,95	1,37	79	27,3	4,45	1,32	87	26,1	4,00	1,26	95	24,9	3,55	1,20	104	23,4	3,08	1,13	114	-	-	-	-
026		36,0	4,75	1,75	133	34,9	4,27	1,70	142	33,6	3,82	1,63	153	32,0	3,38	1,56	165	30,3	2,95	1,47	178	-	-	-	-
033		43,8	5,00	2,13	85	42,7	4,52	2,08	96	41,2	4,09	2,00	108	39,5	3,63	1,92	123	37,3	3,15	1,81	141	-	-	-	-
040		56,9	4,56	2,76	104	54,6	4,10	2,65	117	52,2	3,65	2,52	132	49,4	3,23	2,39	147	46,4	2,84	2,25	163	-	-	-	-
017	18	25,0	5,70	1,21	89	24,1	5,09	1,17	97	23,1	4,54	1,12	106	21,9	3,96	1,06	115	-	-	-	-	-	-	-	-
021		30,6	5,13	1,48	62	29,5	4,62	1,43	71	28,3	4,17	1,37	80	27,0	3,72	1,31	90	-	-	-	-	-	-	-	-
026		38,1	4,90	1,86	116	36,9	4,42	1,80	127	35,5	3,96	1,73	139	33,9	3,52	1,65	152	-	-	-	-	-	-	-	-
033		47,3	5,20	2,31	53	46,1	4,73	2,25	65	44,6	4,29	2,17	80	42,8	3,83	2,08	96	-	-	-	-	-	-	-	-
040		61,6	4,72	2,99	74	59,4	4,25	2,89	88	56,9	3,79	2,76	104	54,0	3,37	2,62	122	-	-	-	-	-	-	-	-

Key

LWT	Leaving water temperature, °C
Qc	Cooling capacity, kW
EER	Energy efficiency ratio, kW/kW
q	Evaporator water flow rate, l/s
ESP	External Static Pressure, kPa

Application data

Standard units, refrigerant: R-410A
Evaporator entering/leaving water temperature difference: 5K
Evaporator fluid: chilled water
Fouling factor: 0 m^2 k/W
Performances in accordance with EN14511-3:2013.

EUROVENT CERTIFIED PERFORMANCE
www.eurovent-certification.com

EREBA 17-21

Inverter Air-Cooled Liquid chillers
& Reversible Air-to-Water Heat Pumps

Easy and fast installation

Hydraulic module available

Inverter technology

compressor and fans

Nominal cooling capacity : 15-18 kW

Nominal heating capacity: 17-21 kW

Cooling or heating

*60°C for 17HT / 57°C for 21HT

Use

The **EREBA** air-to-water heat pump is designed for heating and cooling applications in new, existing individual homes and small businesses models.

When installed alone, EREBA is compatible with low to medium temperature emitters (underfloor heating, fan coil units, water cassettes, radiators, mixed installations, etc.). EREBA is also compatible with medium to high temperature emitters for boiler backup operation.

The EREBA heat pump is installed outside in an open area, ideally as close as possible to the boiler room.

Each unit is tested in the factory and delivered ready for operation.

Range

EREBA's range is composed by 2 models in cooling only and 2 models reversible.

Operating range EREBA 17-21HT in cooling mode with an outdoor temperature from 0°C to 46°C and in heating from -20°C to +30°C.

If the heat pump is the only source of heat:

Below this temperature, heating must be provided by a separate heating source or an additional electrical supply

If the heat pump is used for backup operation:

Operates down to the equilibrium point (temperature below which the heat pump can no longer keep up with heating needs). Below this point, the heat pump and boiler run alternately (heat pump OR boiler).

Compliance

Low Voltage Directive 2014/35/EU

EMC : ElectroMagnectic Compatibility 2014/30/EU

PED : Pressure Equipment Directive 2014/6/EU

WEEE : Waste Electrical & Electronic Equipment 2012/19/EU

RoHS : Restriction of Hazardous Substances Directive 2011/65/EU

EREBA 17-21

Inverter Air-Cooled Liquid chillers & Reversible Air-to-Water Heat Pumps

The **EREBA** liquid chiller/heat pump range was designed for commercial applications such as the air conditioning of offices, hotels and large residential houses.

The units integrate the latest technological innovations: Non-ozone depleting refrigerant R410A, DC inverter twin-rotary compressors, low-noise variable speed fans and microprocessor control.

With exceptional energy efficiency values the inverter chillers qualify for local tax reductions and incentive plans in all EU countries.

For added flexibility the EREBA units are available with hydraulic module integrated into the unit chassis, limiting the installation to straightforward operations like connection of the power supply and the water supply and return piping.

Features

The EREBA heat pump systems can be used with a wide choice of CIAT terminal fan coil units, and ductable products.

Ecodesign is the European Directive that sets mandatory requirements for Energy related Products (ErP) to improve their energy efficiency.

Quiet operation

■ Compressors

- Low-noise INVERTER Twin rotary compressor with low vibration levels
- Advanced technology providing maximum energy-efficiency with high capacity available at peak conditions and optimised efficiency at low and mid compressor speeds. The EREBA heat pump DC inverter uses Intelligent Power Drive Unit (IPDU) hybrid inverter technology. An electronic management logic is used to optimised compressor operation in all conditions, minimised temperature fluctuation to give a perfect individual comfort control with significant reduction of energy consumption:

  PWM: pulse width modulation of the direct current controls the compressor at partial load conditions, adjusting the frequency at fixed voltage. The compressor speed is fine-tuned and the system provides high-level comfort (no temperature fluctuations) at exceptionally efficient working conditions.

  Compressor frequency is increased continuously up to the maximum level. This ensures that there are no current draw peaks in the start-up phase. Inverter ramp-up speed makes soft starts unnecessary and ensures immediate maximum power.
- The two rotary compression cylinders, offset from each other by 180°, and the DC brushless motor with the shaft in perfect balance ensure reduced vibration and noise, even at very low operating speeds. This results in an extremely wide range between minimum and maximum capacity with continuous operation, guaranteeing that the system is always optimised and provides maximum comfort at exceptionally high efficiency levels.
- Twin-rotary cylinders, low vibrations and low load to the shaft ensure highest compressor reliability and a long trouble-free operating life.
- All DC brushless twin-rotary compressors are equipped with internal system to secure the motor against oil issues due to colder climate.

■ Air heat exchanger section

- Vertical air heat exchanger coils
- The latest-generation low-noise fans are now even quieter and do not generate intrusive low-frequency noise
- Rigid fan installation for reduced start-up noise.

Easy and fast installation

■ Integrated hydraulic module

- Variable speed circulator
- Water filter protecting the water pump against circulating debris
- High-capacity membrane expansion tank ensures pressurisation of the water circuit
- Overpressure valve, set to 3 bar
- Thermal insulation and frost protection down to -20°C, using an electric resistance heater and pump cycling.

No additional buffer tank required, simplifying and speeding up the installation process (to be checked with the water volume of installation).

Physical features

- Advanced circuit design and component selection has resulted in a compact unit with an exceptionally small footprint that is easy to transport even through narrow doors. Reduced operating weight and a handle on the unit panels to facilitate transport.
- The unit is enclosed by easily removable panels, covering all components (except air heat exchanger and fans).
- A neutral colour (RAL 7035) to facilitate the integration in residential areas

Simplified electrical connections

- Main disconnect switch with high trip capacity
- Transformer for safe 24 V control circuit supply included

Fast commissioning

- Systematic factory operation test before shipment
- Quick-test function for step-by-step verification of the instruments, electrical components and motors.

Economical operation

Increased seasonal efficiency

- In accordance with EN 14825:2013, Average Climate, energy label reach A+ (see Physical data EREBA Reversible units).

Reduced maintenance costs

- Maintenance-free twin rotary compressors
- Fast diagnosis of possible incidents and their history via the user interface WUI
- R410A refrigerant is easier to use than other refrigerant blends

Environmental care

Ozone-friendly R410A refrigerant

- Chlorine-free refrigerant of the HFC group with zero ozone depletion potential
- Very efficient - gives an increased energy efficiency ratio (EER)

Leak-tight refrigerant circuit

- Brazed refrigerant connections for increased leak-tightness
- Verification of pressure transducers and temperature sensors without transferring refrigerant charge

Superior reliability

Auto-adaptive control

- Control algorithm prevents excessive compressor cycling and permits reduction of the water quantity in the hydraulic circuit.

Exceptional endurance tests

- Corrosion resistance tests in salt mist in the laboratory
- Accelerated ageing test on components that are submitted to continuous operation: compressor piping, fan supports
- Transport simulation test in the laboratory on a vibrating table.

NHC Control

NHC control associate with compressor and fan variable frequency driver combines intelligence with operating simplicity. The control constantly monitors all machine parameters and precisely manages the operation of compressor, expansion devices, fans and of the water heat exchanger water pump for optimum energy efficiency.

Ease-of-use

- NHC control can be associated with a new User interface (WUI) which allow an easy access to the configuration parameters (frequency compressor, refrigerant circuit temperature, sets points, air temp, entering water temp, alarm report…).
- This user interface is also very intuitive in its use. It allows reading and easy selection of the operating mode. The functions are represented by icons on the LCD backlit screen.

To facilitate the use of this interface, 3 levels of access are available: end user, installer and factory.

Key features

- Heating and cooling mode
- Predefined climatic curves (12) or customised climatic curves (water temperature setpoint control)
- Air temperature set point control
- Scheduling mode
- Low noise level or night mode
- Anti-freeze protection
- Floor heating thermal cutoff
- Slab curing mode
- Backup electric heater controlled in 1 /2 /3 heat stage(s)
- Backup by oil or gas boiler in alternating mode
- Hydraulic module with control of the flow rate
- Managed an additional pump
- Management of swimming pool heating during spring and autumn
- Manage domestic hot water with or without
  - Anti-legionella mode
  - DHW backup
  - DHW backup + Boosted by 1 or 2 or 3 electric heat stage(s)
- Master/slave control of 4 units operating in parallel with operating time equalization and automatic changeover in case of a unit fault (sensor in accessory).
- ModBUS Protocol

Choice of control product

3 options are available to drive the EREBA 17 - 21:

- Dry contact
- User interface WUI
- ModBus protocol

User Interface WUI

This interface can be installed up to 50 m away. It is connected to the NHC board with a 4 wires cable.

2 installation possibilities:

- WUI has an internal sensor to measure the room temperature take with the internal sensor, setpoint selected is air temperature.

1

Modbus

Direct access with Modbus connection to set, configure and monitor the EREBA.

Input remote contact :

- Remote On/Off Contact
- Remote Heat/Cool Contact: This switch is used to select the Cooling Mode (contact opened) or the Heating Mode (contact closed).
- Remote Economic Contact: This switch is used to select the regular Home Mode when contact is opened or the Economic Away Mode when contact is closed.
- Safety Input Contact: This switch is normally closed type, according to configuration it is used either to stop the unit, to ban the Heating Mode or to ban the Cooling Mode when contact is opened.

Large choice of Input Contacts

Several functions can be configured by the installer. They allow to adapt to the environment of the machine:

- Power Limitation / Night Mode: This switch is used to reduce the compressor maximum frequency to avoid noise.
- Off Peak: If the General Purpose Contact, configured to "Off Peak", is closed then the Electric Heat Stages are not allowed.
- Loadshed Request: If the General Purpose Contact, configured to "Loadshed Request", is closed then unit shall be stopped as soon as possible.
- Solar Input: If the General Purpose Contact, configured to "Solar Input", is closed then the unit is not allowed to run in Heating or DHW Mode because hot water is produced from a solar source.
- DHW Request Switch from tank : When this input is closed, the Domestic Hot Water production is requested (need DHW sensor delivered in accessory).
- DHW Priority : When this input is closed, the unit is switching to Domestic Hot Water production regardless of the Space Heating demand and the current DHW schedule (need DHW sensor delivered in accessory).
- Anti-Legionella Cycle Request : When this input is closed, the Domestic Hot Water production is requested with the Anti-Legionella setpoint.
- Summer Switch : This switch is used to select the Winter (contact opened) or the Summer Mode (contact closed).
- Energy Meter Input : This input is used to count the number of pulses received from an external energy meter (not supplied)
- External Alarm Indication Input : When this input is opened, alarm is tripped. This alarm is for information only, it does not affect the unit operation.

Output remote contact available

2 Output contacts could be chosen on the NHC board, upon configuration for the following purposes:

alert, alarm , standby, running (Cool, Heat, DHW or Defrost Modes), indoor air temperature reached, electrical heat stage 2, electrical heat stage 3.

HYDRAULIC MODULE

The hydraulic module reduces the installation time. The unit is factory-equipped with the main hydraulic components required for the installation.

The water heat exchanger and the hydraulic module are protected against frost down to -20°C, using an electric resistance heater (standard) and pump cycling. However, the use of MPG (Mono Propylene Glycol) can effectively protect the installation even in case of power failure

Hydraulic module		
Expansion tank volume	l	8
Maximum water-side operating pressure	kPa	300
Water pump		
Power input*	kW	0.31
Nominal operating current draw*	A	1.57

* Nominal conditions: evaporator entering/leaving water temperature 12°C/7°C, outside air temperature 35°C, evaporator fouling factor = 0 m² K/kW.

Gross performances, not in accordance with EN14511-3:2013. These performances do not take into account the correction for the proportional heating capacity and power input generated by the water pump to overcome the internal pressure drop in the heat exchanger.

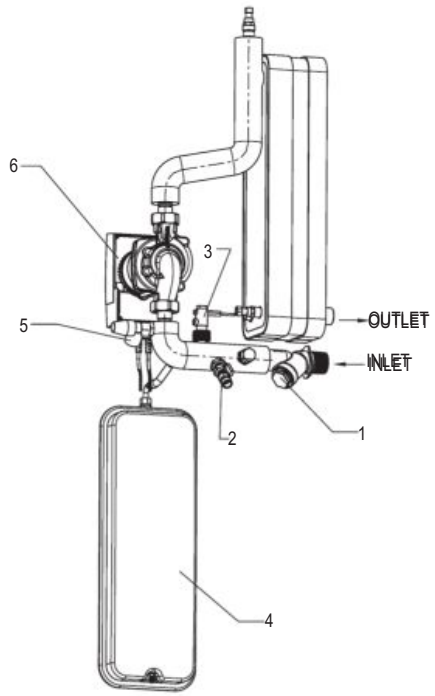

Legend:

1 Mesh filter
2 Water drain valve
3 Paddle flow switch
4 Expansion tank
5 Safety valve
6 Circulator

PHYSICAL DATA, EREBA COOLING 17T - 21T

EREBA Cooling only				17T	21T
Cooling					
Standard unit Full load performances*	CA1	Nominal capacity	kW	16,0	19,2
		EER	kW/kW	3,46	3,30
		Eurovent class		A	A
	CA2	Nominal capacity	kW	22,2	25,9
		EER	kW/kW	4,29	4,10
		Eurovent class		A	A
Standard unit Seasonal energy efficiency**		**SEER $_{12/7\ °C}$ Comfort low temp.**	**kWh/kWh**	**5,56**	**5,48**
		ηs cool $_{12/7\ °C}$	**%**	**219**	**216**
Sound power level (1)			dB(A)	71	74
Sound pressure level at 10 m(2)			dB(A)	40	43
Length			mm	1140	
Width			mm	585	
Height			mm	1580	
Operating Weight (3)			kg	169	177
Compressors				Rotary compressor	
R410A refrigerant charge (3)			kg	6,25	
Minimum capacity control (4)			%	33%	41%
Condenser				Grooved copper tubes, aluminium fins	
Quantity axial fan				2	
Maximum total air flow			l/s	2000	2400
Maximum rotational speed			rps	14	16
Evaporator				Brazed plate heat exchanger	
Water volume			L	1,52	1,9
Expansion tank volume			l	8	
Max. water-side operating pressure with hydraulic module (5)			kPa	300	300
Outlet diameter / with adaptor				1"G male / 1"1/4 G male	
Chassis paint colour				RAL 7035	

*	In accordance with standard EN 14511-3:2013
**	In accordance with standard EN 14825:2016, average climate
CA1	Cooling mode conditions: Temperature of the entering/leaving water to/from the evaporator 12 °C/7 °C, outdoor air temperature at 35 °C. Evaporator fouling factor 0 m² k/W.
CA2	Cooling mode conditions: Temperature of the entering/leaving water to/from the evaporator 23 °C/18 °C, outdoor air temperature at 35 °C. Evaporator fouling factor 0 m² k/W.
ηs cool$_{12/7\ °C}$ & SEER $_{12/7\ °C}$	**Values in bold comply with Ecodesign Regulation (EU) No. 2016/2281 for Comfort application**
(1)	In dB ref=10^{-12} W, (A) weighting. Declared dual-number noise emission values in accordance with ISO 4871 (with an associated uncertainty of +/-3dB(A)). Measured in accordance with ISO 9614-1 and certified by Eurovent.
(2)	In dB ref 20 µPa, (A) weighting. Declared dual-number noise emission values in accordance with ISO 4871 (with an associated uncertainty of +/-3dB(A)). For information, calculated from the sound power level Lw(A).
(3)	Values are guidelines only. Refer to the unit nameplate.
(4)	Cooling Eurovent condition
(5)	Min. water-side operating pressure with variable speed hydraulic module is 40 kPa.

EUROVENT CERTIFIED PERFORMANCE www.eurovent-certification.com

Eurovent certified values

1

PHYSICAL DATA, EREBA 17HT - 21HT

Reversible EREBA				17HT	21HT
Heating					
Standard unit Full load performances*	HA1	Nominal capacity	kW	16,9	20,7
		COP	kW/kW	4,23	4,15
	HA2	Nominal capacity	kW	15,8	19,5
		COP	kW/kW	3,44	3,32
	HA3	Nominal capacity	kW	15,0	18,8
		COP	kW/kW	2,68	2,50
Standard unit Seasonal energy efficiency**	HA3	**$SCOP_{47/55\ °C}$**	**kW/kW**	**3,03**	**2,85**
		ηs heat $_{47/55\ °C}$	**%**	**118**	**111**
		P_{rated}	kW	9	15
Cooling					
Standard unit Full load performances*	CA1	Nominal capacity	kW	15,2	19,1
		EER	kW/kW	3,14	3,18
		Eurovent class	kW	B	A
	CA2	Nominal capacity	kW/kW	21,4	26,4
		EER	kW	3,99	3,98
		Eurovent class	kW/kW	A	A
Standard unit Seasonal energy efficiency**		SEER $_{12/7\ °C}$ Comfort low temp.	**kW/kW**	4,60	4,50
		ηs cool $_{12/7\ °C}$	kW	181	177
Sound power level (1)			dB(A)	71	74
Sound pressure level at 10 m (2)			dB(A)	40	43
Length			mm	1140	
Width			mm	585	
Height			mm	1580	
Operating Weight (3)			kg	191	199
Compressors				Rotary compressor	
R410A refrigerant charge (3)			kg	8	
Minimum capacity control (4)			%	33%	41%
Air heat exchanger				Grooved copper tubes, aluminium fins	
Quantity axial fan				2	
Maximum total air flow			l/s	2000	2400
Maximum rotational speed			rps	14	16
Water heat exchanger				Brazed plate heat exchanger	
Water volume			L	1,52	1,9
Expansion tank volume				8	
Max. water-side operating pressure with hydraulic module (5)				300	
Outlet diameter / with adaptor				1"G male / 1"1/4 G male	
Chassis paint colour				RAL 7035	

*	In accordance with standard EN 14511-3:2013
**	In accordance with standard EN 14825:2016, average climate
HA1	Heating mode conditions: Temperature of the entering/leaving water to/from the exchanger 30 °C/35 °C, outdoor air temperature tdb/twb at 7 °C/6 °C wb, evaporator fouling factor 0 m² k/W
HA2	Heating mode conditions: Temperature of the entering/leaving water to/from the exchanger 40 °C/45 °C, outdoor air temperature tdb/twb at 7 °C/6 °C wb, evaporator fouling factor 0 m² k/W
HA3	Heating mode conditions: Temperature of the entering/leaving water to/from the exchanger 47 °C/55 °C, outdoor air temperature tdb/twb at 7 °C/6 °C wb, evaporator fouling factor 0 m² k/W
CA1	Cooling mode conditions: Temperature of the entering/leaving water to/from the evaporator 12 °C/7 °C, outdoor air temperature at 35 °C. Evaporator fouling factor 0 m² k/W.
CA2	Cooling mode conditions: Temperature of the entering/leaving water to/from the evaporator 23 °C/18 °C, outdoor air temperature at 35 °C. Evaporator fouling factor 0 m² k/W.
ηs heat $_{47/55\ °C}$ & $SCOP_{47/55\ °C}$	**Values in bold comply with Ecodesign Regulation (EU) No. 813/2013 for heating application**
ηs $cool_{12/7\ °C}$ & SEER $_{12/7\ °C}$	Values calculated in accordance with EN 14825:2016
(1)	In dB ref=10^{-12} W, (A) weighting. Declared dual-number noise emission values in accordance with ISO 4871 (with an associated uncertainty of +/-3dB(A)). Measured in accordance with ISO 9614-1 and certified by Eurovent.
(2)	In dB ref 20 µPa, (A) weighting. Declared dual-number noise emission values in accordance with ISO 4871 (with an associated uncertainty of +/-3dB(A)). For information, calculated from the sound power level Lw(A).
(3)	Values are guidelines only. Refer to the unit nameplate.
(4)	Cooling Eurovent condition
(5)	Min. water-side operating pressure with variable speed hydraulic module is 40 kPa.

EUROVENT CERTIFIED PERFORMANCE www.eurovent-certification.com

Eurovent certified values

ELECTRICAL DATA, EREBA 17T-21T/17HT-21HT

EREBA		17	21
Nominal power supply	V-ph-Hz	400-3+N-50	400-3+N-50
Voltage range	V	360-440	360-440
Control circuit supply		24V AC via internal transformer	
Nominal unit current drawn (Un) *	A	12,5	14,3
Maximum unit power input (Un) **	kW	10,8	12,4
Cos Phi unit at maximum power **		0,93	0,93
Maximum unit current drawn (Un-10%)***	A	18,5	21,2
Maximum unit current drawn (Un) ****	A	16,7	19,2

* Conditions equivalent to the standardised Eurovent conditions (evaporator water entering/leaving temperature = 12 °C/7 °C, outside air temperature = 35 °C).
** Power input, compressors and fans, at the unit operating limits (saturated suction temperature 15 °C, saturated condensing temperature 68.3 °C) and nominal voltage of 400 V (data given on the unit nameplate).
*** Maximum unit operating current at maximum unit power input and at 360 V.
**** Maximum unit operating current at maximum unit power input and at 400 V (values given on the unit nameplate).
Fan motor electrical data: at Eurovent equivalent conditions and motor ambient air temperature of 50 °C at 400 V: 3.8 A, start-up current 20 A, power input 1.75 kW

NEW ENERGY EFFICIENCY METRIC: SCOP

Because buildings have a thermal load depending on outdoor air temperature

The Seasonal Coefficient of Performance (SCOP) is a new European parameter to evaluate the energy efficiency of heat pumps. It replaces the Coefficient of Performance (COP), which measured the ratio of power consumed to power produced in the heating mode on a single operating point.

Unlike its predecessor, the SCOP is representative of operation during the heating season as it includes seasonal variations by defining several realistic measurement points. Together, these contribute to classification in the correct energy efficiency class.

SCOP versus COP efficiency (for heat pumps)

TEMPERATURE		OUTPUT (kW)		AUXILIARY MODES (kWh)		HOURS	
COP	**SCOP**	**COP**	**SCOP**	**COP**	**SCOP**	**COP**	**SCOP**
1 temperature condition: 7°C	Several rating temperatures: -10°C to 16°C (average climate)	Full load	Partial load + Full load	No auxiliary power modes taken into consideration	Includes consumption auxiliary modes: - Standby mode - Off mode - Thermostat off…	N/A	Number of hours occurring at each air temperature (bin hours)

SCOP Calculation

SCOP is the ratio between annual heating demand and annual energy input over an entire heating season.

$$SCOP = \frac{\text{ANNUAL HEATING DEMAND}}{\text{ANNUAL ENERGY INPUT*}}$$

* Annual energy input:
- Compressor running (SCOPon)
- Compressor not running: thermostat OFF, standby, OFF mode & crankcase heater
- Backup heater to supplement heat pump capacity

ηs: seasonal primary energy efficiency metrics:

In order to compare the energy efficiency of products using different sources of energy, such as boilers (gas, fuel) and electric heat pumps, the Ecodesign regulation introduces a new measurement expressed in primary energy: ηs (eta s).

$$\eta s = SCOP/2.5 \times 100 - i^{**}$$

** Air source heat pump i = 3

Dimensions (in mm)

EREBA 17T-21T / 17HT-21HT

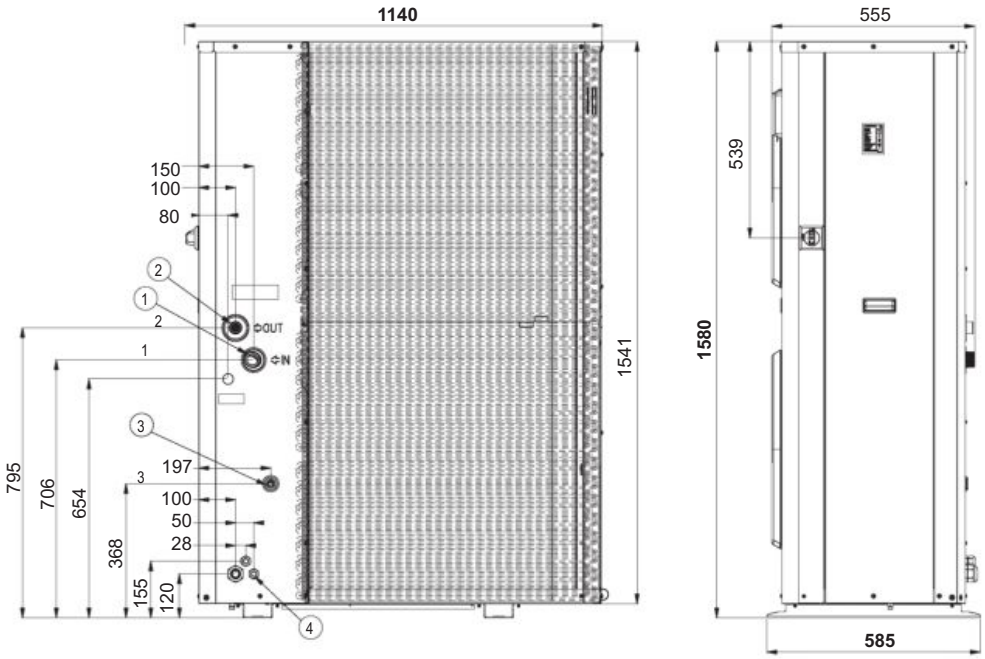

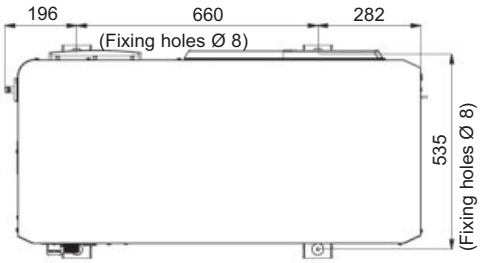

Legend
All dimensions are given in mm
1. Water inlet
2. Water outlet
3. Fill kit connection
4. Safety valve outlet
5. Electrical connections

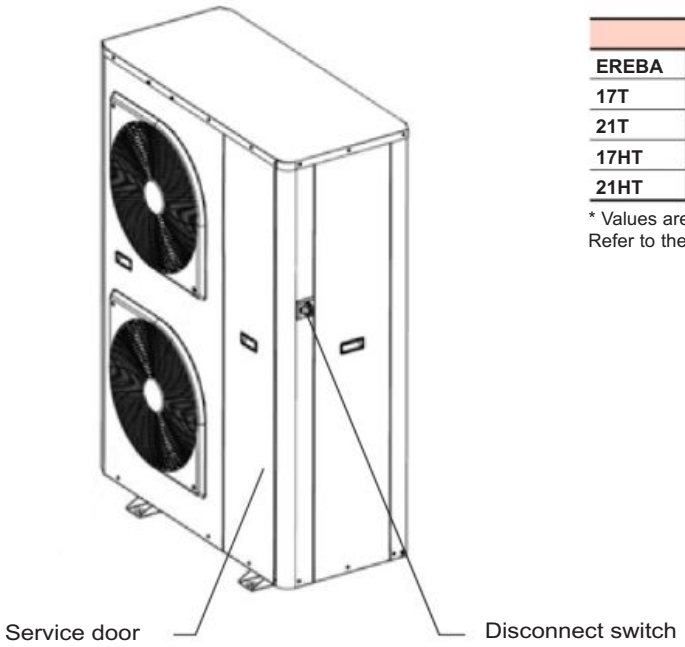

Weight (in kg)	
EREBA	**Operating weight***
17T	169
21T	177
17HT	191
21HT	199

* Values are guidelines only.
Refer to the unit nameplate

CLEARANCES (IN MM)

▪ EREBA 17T-21T / 17HT-21HT

Single unit installation

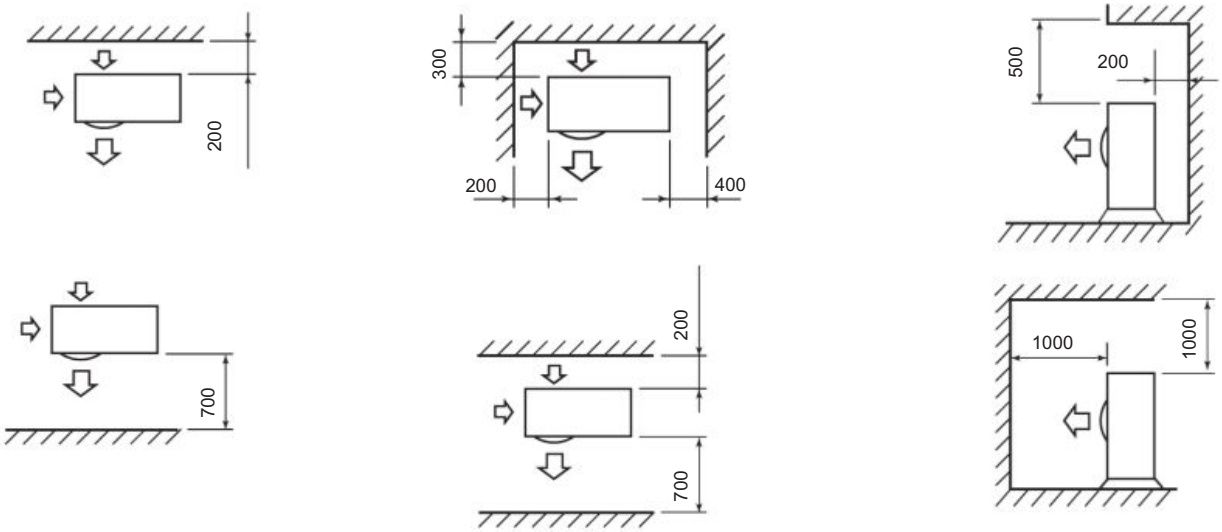

Multiple unit installation

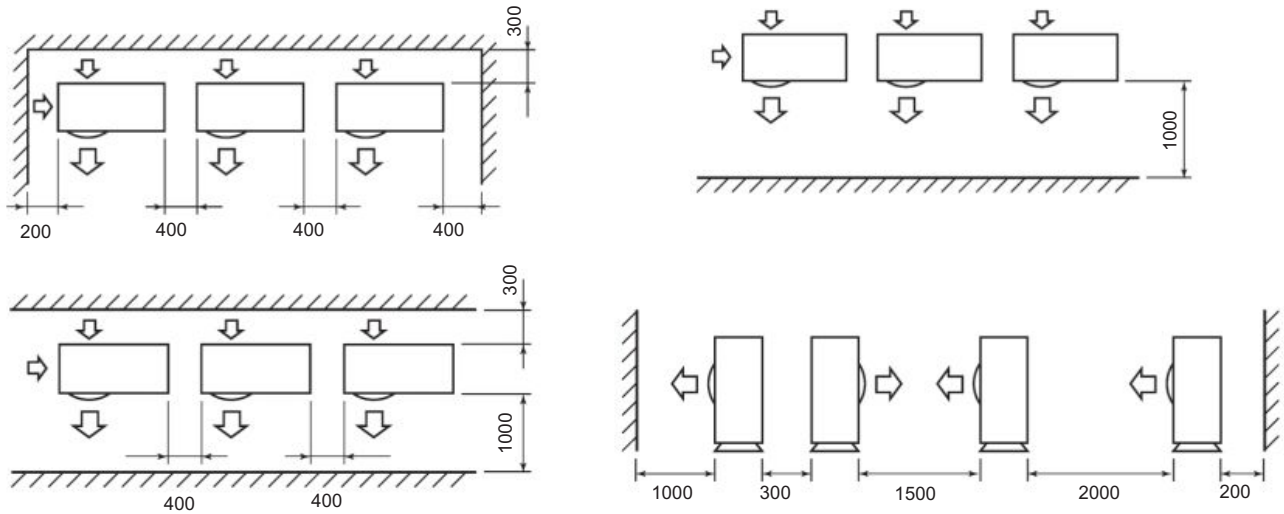

Note: The height of any obstacle at both the front and rear should be less than the outdoor unit height.

HEATING CAPACITIES IN ACCORDANCE WITH EN14511-3

Outside air temperature in °C	EREBA	LEAVING WATER TEMPERATURE °C																			
		Heating floor										Comfort unit									
		35										45									
		Pc kW			Pa kW			COP			Q l/s	Pc kW			Pa kW			COP			Q l/s
		Nom	Min	**Max**	Nom	Min	Max	Nom	Min	Max	Nom	Nom	Min	**Max**	Nom	Min	Max	Nom	Min	Max	Nom
-20	17HT	4,3	2,2	**4,4**	2,3	1,0	2,3	1,9	2,1	1,9	0,45	4,1	2,1	**4,2**	2,6	1,2	2,6	1,6	1,7	1,6	0,45
	21HT	6,2	4,0	**6,3**	3,2	2,0	3,2	1,9	2,0	1,9	0,58	5,7	4,7	**5,7**	3,7	3,1	3,7	1,6	1,5	1,6	0,58
-15	17HT	5,1	2,6	**5,0**	2,5	1,1	2,5	2,1	2,3	2,1	0,45	4,8	2,4	**4,8**	2,8	1,3	2,8	1,7	1,9	1,7	0,45
	21HT	7,4	4,8	**7,4**	3,4	2,1	3,4	2,2	2,3	2,2	0,58	6,9	5,7	**6,9**	4,0	3,3	4,0	1,7	1,7	1,7	0,58
-10	17HT	6,6	2,4	**6,7**	2,9	0,9	3,0	2,2	2,6	2,2	0,52	6,3	2,8	**6,5**	3,3	1,3	3,5	1,9	2,1	1,9	0,50
	21HT	9,4	5,7	**10,1**	3,9	2,2	4,3	2,4	2,6	2,4	0,64	8,8	6,7	**9,5**	4,6	3,5	5,0	1,9	1,9	1,9	0,61
-7	17HT	7,1	2,4	**10,3**	3,0	0,9	5,0	2,4	2,7	2,1	0,57	6,8	2,2	**9,9**	3,4	1,0	5,7	2,0	2,2	1,7	0,54
	21HT	10,2	6,4	**15,0**	4,0	2,3	6,7	2,5	2,8	2,2	0,69	9,5	7,4	**14,4**	4,7	3,6	7,9	2,0	2,0	1,8	0,66
2	17HT	12,5	5,4	**18,4**	4,0	1,7	7,4	3,1	3,3	2,5	0,72	11,8	5,1	**17,6**	4,7	1,7	8,5	2,5	3,0	2,1	0,68
	21HT	15,3	7,1	**19,5**	5,2	2,3	7,8	2,9	3,1	2,5	0,90	14,5	5,4	**18,5**	6,1	2,2	9,0	2,4	2,4	2,0	0,86
7	17HT	16,9	3,3	**21,3**	4,0	0,8	6,9	4,2	4,0	3,1	0,83	15,8	4,4	**20,0**	4,6	1,5	7,9	3,4	2,9	2,5	0,78
	21HT	20,7	7,4	**21,7**	5,0	1,7	7,3	4,2	4,4	3,0	1,01	19,5	6,6	**21,1**	5,9	2,0	8,5	3,3	3,4	2,5	0,97
10	17HT	16,9	3,7	**25,3**	4,1	0,7	7,4	4,2	5,6	3,4	0,87	15,9	4,9	**25,0**	4,7	1,2	8,7	3,4	3,9	2,9	0,82
	21HT	22,4	8,6	**32,1**	5,0	2,2	8,8	4,5	3,8	3,7	1,09	21,3	7,6	**30,9**	5,9	2,6	10,2	3,6	2,9	3,0	1,04

Outside air temperature in °C	EREBA	LEAVING WATER TEMPERATURE °C																			
		Radiator																			
		55										60									
		Pc kW			Pa kW			COP			Q l/s	Pc kW			Pa kW			COP			Q l/s
		Nom	Min	**Max**	Nom	Min	Max	Nom	Min	Max	Nom	Nom	Min	**Max**	Nom	Min	Max	Nom	Min	Max	Nom
-10	17HT	6,5	2,8	**6,7**	3,6	1,6	3,7	1,8	1,7	1,8	0,48	6,3	2,9	**6,4**	3,8	1,7	3,9	1,7	1,6	1,6	0,47
	21HT	8,1	6,2	**8,8**	5,3	4,1	5,7	1,5	1,5	1,5	0,58										
-7	17HT	7,0	2,1	**8,3**	3,7	1,2	4,6	1,9	1,8	1,8	0,52	6,8	2,1	**6,9**	3,9	1,2	4,0	1,7	1,7	1,7	0,50
	21HT	8,9	6,9	**11,1**	5,5	4,3	7,0	1,6	1,6	1,6	0,62										
2	17HT	11,2	4,2	**12,9**	5,3	1,7	6,6	2,1	2,4	2,0	0,65	10,8	4,1	**11,1**	5,6	1,9	5,8	1,9	2,2	1,9	0,63
	21HT	13,4	6,2	**16,7**	7,0	3,2	9,0	1,9	1,9	1,8	0,79										
7	17HT	15,0	4,1	**17,7**	5,5	1,9	6,6	2,7	2,2	2,7	0,74	14,4	3,8	**15,0**	5,5	2,1	5,8	2,6	1,8	2,6	0,72
	21HT	18,7	6,2	**22,8**	6,9	2,3	8,9	2,7	2,7	2,6	0,92										
10	17HT	15,0	4,6	**18,3**	5,4	1,6	6,6	2,8	2,9	2,8	0,78	14,4	4,6	**15,3**	5,7	1,7	6,2	2,5	2,6	2,5	0,74
	21HT	20,1	7,1	**24,4**	6,8	3,2	8,9	3,0	2,2	2,8	0,99										

Entering/leaving water temperature difference : 5K
Fouling factor: 0 m² K/W
Pure water fluid
Performances in accordance with EN14511-3:2011

EUROVENT CERTIFIED PERFORMANCE
www.eurovent-certification.com

COOLING CAPACITIES IN ACCORDANCE WITH EN14511-3

Ereba reversible

Leaving Water Temp. in °C	Reversible EREBA	OUTSIDE AIR TEMPERATURE IN °C																			
		5										15									
		Pf kW			Pa kW			EER			Q l/s	Pf kW			Pa kW			EER			Q l/s
		Nom	Min	**Max**	Nom	Min	Max	Nom	Min	Max	Nom	Nom	Min	**Max**	Nom	Min	Max	Nom	Min	Max	Nom
5	17HT	15,7	13,3	**15,7**	3,0	2,7	3,0	5,3	5,0	5,3	0,75	15,4	9,9	**15,4**	3,4	1,7	3,4	4,5	5,7	4,5	0,73
	21HT	20,9	14,4	**24,5**	4,2	3,0	6,3	5,0	4,9	3,9	1,00	20,5	12,8	**24,5**	4,4	3,9	6,3	4,6	3,3	3,9	0,98
7	17HT	16,6	14,1	**16,6**	3,0	2,7	3,0	5,5	5,2	5,5	0,79	16,3	10,5	**16,3**	3,5	1,7	3,5	4,6	6,4	4,6	0,78
	21HT	22,0	15,2	**26,4**	4,4	3,0	6,3	5,1	5,1	4,2	1,05	21,6	13,5	**26,3**	4,6	4,0	6,4	4,7	3,4	4,1	1,03
10	17HT	18,0	7,9	**18,0**	3,2	1,1	3,2	5,7	7,6	5,7	0,86	17,8	6,2	**17,8**	3,6	0,7	3,6	4,9	9,4	4,9	0,85
	21HT	23,8	16,5	**29,0**	4,6	3,1	6,4	5,2	5,4	4,6	1,14	23,3	8,1	**28,7**	4,8	1,7	6,5	4,9	4,8	4,4	1,12
15	17HT	20,6	8,5	**20,6**	3,4	1,1	3,4	6,1	7,7	6,1	0,99	20,4	7,0	**20,4**	3,8	0,7	3,8	5,3	9,3	5,3	0,98
	21HT	27,5	18,8	**33,3**	4,7	3,2	6,7	5,8	5,9	5,0	1,32	27,3	9,5	**33,3**	4,8	1,6	6,8	5,7	6,0	4,9	1,31
18	17HT	22,2	9,1	**22,2**	3,5	1,2	3,5	6,3	7,9	6,3	1,06	22,0	7,1	**22,0**	4,0	0,8	4,0	5,5	9,3	5,5	1,06
	21HT	29,5	20,3	**36,3**	5,0	3,3	6,9	6,0	6,2	5,3	1,41	29,8	9,9	**36,3**	4,9	1,8	7,0	6,1	5,6	5,2	1,43

Leaving Water Temp. in °C	Reversible EREBA	OUTSIDE AIR TEMPERATURE IN °C																			
		25										35									
		Pf kW			Pa kW			EER			Q l/s	Pf kW			Pa kW			EER			Q l/s
		Nom	Min	**Max**	Nom	Min	Max	Nom	Min	Max	Nom	Nom	Min	**Max**	Nom	Min	Max	Nom	Min	Max	Nom
5	17HT	14,5	9,0	**14,5**	3,8	2,0	3,8	3,9	4,4	3,9	0,69	14,3	3,0	**14,8**	4,7	1,3	5,0	3,0	2,3	3,0	0,68
	21HT	19,9	13,8	**23,8**	4,9	3,2	6,9	4,1	4,3	3,5	0,95	18,1	8,3	**22,3**	5,8	2,5	8,3	3,1	3,3	2,7	0,86
7	17HT	15,6	9,6	**15,6**	3,8	2,0	3,8	4,1	4,7	4,1	0,75	15,2	3,2	**15,8**	4,8	1,3	5,1	3,1	2,5	3,1	0,73
	21HT	21,1	14,7	**25,2**	5,0	3,3	7,1	4,2	4,5	3,6	1,01	19,1	8,9	**23,6**	6,0	2,5	8,5	3,2	3,5	2,8	0,91
10	17HT	17,1	5,2	**17,1**	3,9	1,2	3,9	4,4	4,6	4,4	0,82	16,6	3,6	**17,3**	5,0	1,3	5,3	3,4	2,8	3,3	0,79
	21HT	22,9	8,4	**27,3**	5,2	1,9	7,4	4,4	4,4	3,7	1,10	20,9	9,7	**25,6**	6,4	2,7	8,8	3,2	3,6	2,9	1,00
15	17HT	19,8	6,1	**19,8**	4,0	1,1	4,0	4,9	5,4	4,9	0,95	19,2	4,2	**19,9**	5,2	1,2	5,6	3,7	3,4	3,6	0,92
	21HT	26,2	9,8	**31,0**	5,4	1,9	7,9	4,8	5,2	3,9	1,26	23,9	11,2	**29,1**	6,8	2,7	9,4	3,5	4,1	3,1	1,15
18	17HT	21,5	7,0	**21,9**	4,1	0,9	4,2	5,2	7,8	5,2	1,03	21,4	4,6	**21,6**	5,4	1,2	5,6	4,0	3,9	3,8	1,03
	21HT	28,3	10,8	**33,3**	5,6	1,8	8,2	5,0	5,9	4,0	1,36	26,4	12,2	**31,3**	6,6	2,8	9,8	4,0	4,4	3,2	1,26

Leaving Water Temp. in °C	Reversible EREBA	OUTSIDE AIR TEMPERATURE IN °C									
		45									
		Pf kW			Pa kW			EER			Q l/s
		Nom	Min	**Max**	Nom	Min	Max	Nom	Min	Max	Nom
5	17HT	12,3	4,0	**12,3**	5,2	2,7	5,2	2,4	1,4	2,4	0,58
	21HT	15,2	6,5	**16,4**	6,4	2,8	7,1	2,4	2,3	2,3	0,72
7	17HT	13,1	4,2	**13,1**	5,3	2,8	5,3	2,5	1,5	2,5	0,62
	21HT	16,1	6,9	**17,4**	6,6	2,8	7,2	2,5	2,4	2,4	0,77
10	17HT	14,3	4,7	**14,4**	5,5	2,8	5,5	2,6	1,7	2,6	0,69
	21HT	17,6	7,6	**19,0**	6,8	2,9	7,5	2,6	2,6	2,6	0,84
15	17HT	16,7	5,4	**16,7**	5,8	2,9	5,8	2,9	1,9	2,9	0,80
	21HT	20,2	8,8	**21,8**	7,1	3,0	7,9	2,8	3,0	2,8	0,97
18	17HT	18,5	5,9	**18,5**	5,9	2,9	5,9	3,1	2,0	3,1	0,89
	21HT	21,9	9,6	**23,6**	7,3	3,0	8,1	3,0	3,2	2,9	1,05

Entering/leaving water temperature difference : 5K
Fouling factor: 0 m² K/W
Pure water fluid
Performances in accordance with EN14511-3:2011

EUROVENT CERTIFIED PERFORMANCE
www.eurovent-certification.com

COOLING CAPACITIES IN ACCORDANCE WITH EN14511-3

Ereba cooling only

Leaving water temp. in °C	EREBA Cooling only	OUTSIDE AIR TEMPERATURE IN °C																			
		5										15									
		Pf kW			Pa kW			EER			Q l/s	Pf kW			Pa kW			EER			Q l/s
		Nom	Min	**Max**	Nom	Min	Max	Nom	Min	Max	Nom	Nom	Min	**Max**	Nom	Min	Max	Nom	Min	Max	Nom
5	17T	16,3	5,4	**16,3**	3,1	0,5	3,1	5,3	10,8	5,3	0,78	16,1	5,3	**16,1**	3,2	0,6	3,2	5,1	9,2	5,1	0,77
	21T	20,8	9,4	**24,7**	3,9	1,3	5,7	5,3	7,5	4,3	0,99	20,7	9,0	**26,2**	4,2	1,6	6,2	4,9	5,8	4,3	0,99
7	17T	17,3	5,8	**17,3**	3,1	0,4	3,1	5,5	13,5	5,5	0,82	17,0	5,6	**17,0**	3,2	0,6	3,2	5,2	10,1	5,2	0,81
	21T	22,0	10,0	**26,4**	4,0	1,3	5,7	5,4	7,8	4,6	1,05	21,8	9,6	**27,9**	4,3	1,6	6,3	5,1	6,0	4,4	1,04
10	17T	18,7	6,3	**18,7**	3,3	0,4	3,3	5,7	15,1	5,7	0,89	18,5	6,2	**18,5**	3,4	0,5	3,4	5,5	11,9	5,5	0,88
	21T	23,7	10,8	**29,0**	4,3	1,3	5,9	5,6	8,2	4,9	1,13	24,0	10,7	**30,6**	4,4	1,5	6,5	5,5	7,1	4,7	1,15
15	17T	21,2	7,3	**21,2**	3,5	0,4	3,5	6,1	20,5	6,1	1,02	21,4	7,0	**21,4**	3,4	0,5	3,4	6,2	13,7	6,2	1,03
	21T	27,9	12,3	**33,7**	4,2	1,4	6,2	6,6	8,9	5,4	1,34	27,8	12,5	**34,8**	4,5	1,4	7,0	6,2	8,6	4,9	1,33
18	17T	23,7	7,9	**23,7**	3,4	0,3	3,4	7,0	25,5	7,0	1,13	23,6	7,7	**23,6**	3,4	0,4	3,4	6,9	19,4	6,8	1,13
	21T	30,5	13,3	**36,1**	4,3	1,4	6,6	7,1	9,3	5,5	1,46	30,3	13,2	**37,5**	4,6	1,6	7,4	6,5	8,4	5,1	1,45

Leaving water temp. in °C	EREBA Cooling only	OUTSIDE AIR TEMPERATURE IN °C																			
		25										35									
		Pf kW			Pa kW			EER			Q l/s	Pf kW			Pa kW			EER			Q l/s
		Nom	Min	**Max**	Nom	Min	Max	Nom	Min	Max	Nom	Nom	Min	**Max**	Nom	Min	Max	Nom	Min	Max	Nom
5	17T	15,4	5,6	**15,4**	3,6	1,1	3,6	4,3	5,1	4,3	0,73	14,7	5,8	**15,8**	4,5	1,6	5,0	3,2	3,6	3,1	0,70
	21T	19,8	8,7	**24,6**	4,8	1,7	7,1	4,2	5,0	3,5	0,95	18,1	9,3	**23,5**	5,6	2,5	8,5	3,2	3,7	2,8	0,86
7	17T	16,3	6,3	**16,3**	3,7	1,0	3,7	4,5	6,6	4,5	0,78	16,0	6,3	**16,7**	4,6	1,6	5,1	3,5	3,9	3,2	0,76
	21T	21,0	9,3	**26,0**	4,9	1,8	7,3	4,3	5,3	3,6	1,00	19,2	9,9	**24,9**	5,8	2,5	8,7	3,3	3,9	2,8	0,91
10	17T	17,8	6,6	**17,8**	3,7	1,1	3,7	4,8	6,0	4,8	0,85	17,1	7,0	**18,2**	4,8	1,6	5,3	3,6	4,3	3,4	0,82
	21T	22,9	10,2	**28,3**	5,0	1,7	7,6	4,6	5,9	3,7	1,09	21,0	10,8	**27,0**	5,9	2,6	9,1	3,5	4,2	3,0	1,00
15	17T	20,5	8,1	**20,5**	3,9	0,9	3,9	5,3	8,7	5,3	0,98	19,6	8,2	**20,9**	5,0	1,6	5,6	3,9	5,2	3,7	0,94
	21T	26,2	11,9	**32,2**	5,3	1,7	8,2	5,0	6,8	3,9	1,26	24,1	12,5	**30,8**	6,2	2,6	9,7	3,9	4,8	3,2	1,15
18	17T	22,2	8,9	**22,2**	4,0	0,9	4,0	5,6	10,1	5,6	1,07	22,2	9,0	**22,6**	5,2	1,5	5,8	4,3	5,9	3,9	1,06
	21T	28,3	13,0	**34,7**	5,5	1,7	8,5	5,2	7,5	4,1	1,36	25,9	13,6	**33,3**	6,3	2,6	10,1	4,1	5,2	3,3	1,24

Leaving water temp. in °C	EREBA Cooling only	OUTSIDE AIR TEMPERATURE IN °C									
		45									
		Pf kW			Pa kW			EER			Q l/s
		Nom	Min	**Max**	Nom	Min	Max	Nom	Min	Max	Nom
5	17T	13,2	7,8	**13,2**	5,2	3,0	5,2	2,5	2,6	2,5	0,63
	21T	16,2	9,0	**17,4**	6,6	3,6	7,3	2,5	2,5	2,4	0,77
7	17T	14,0	8,4	**14,0**	5,3	3,1	5,3	2,6	2,7	2,6	0,67
	21T	17,2	9,6	**18,5**	6,7	3,6	7,4	2,6	2,6	2,5	0,82
10	17T	15,3	9,2	**15,3**	5,5	3,1	5,5	2,8	2,9	2,8	0,73
	21T	18,8	10,5	**20,2**	6,9	3,7	7,7	2,7	2,9	2,6	0,90
15	17T	17,6	10,7	**17,6**	5,7	3,2	5,8	3,1	3,4	3,1	0,84
	21T	21,7	12,2	**23,3**	7,3	3,8	8,1	3,0	3,2	2,9	1,04
18	17T	19,1	11,7	**19,1**	5,9	3,2	5,9	3,2	3,6	3,2	0,92
	21T	23,5	13,3	**25,2**	7,5	3,9	8,4	3,1	3,4	3,0	1,13

Entering/leaving water temperature difference : 5K

Fouling factor: 0 m² K/W

Pure water fluid

Performances in accordance with EN14511-3:2011

EUROVENT CERTIFIED PERFORMANCE
www.eurovent-certification.com

AQUACIAT LD ILD

Water chillers
Heat pump

Unit with protection grille option

Compact and silent

Scroll compressors
High-efficiency brazed plate heat exchangers
All-aluminium micro-channel condenser
Self-adjusting electronic control

Cooling capacity, LD: 40 to 156 kW
Cooling capacity, ILD: 38 to 148 kW
Heating capacity, ILD: 42 to 150 kW

Cooling only | **Cooling and heating** | **Hydraulic module** | **Heat recovery**

EUROVENT CERTIFIED PERFORMANCE
www.eurovent-certification.com

Use

The latest generation of **AQUACIAT** heat pumps and water chillers are the perfect solution for all heating and cooling applications in the Office, Healthcare, Industry, Administration, Shopping Centres and Collective Housing markets.

These units are designed for outdoor installation and require no special protection against adverse weather conditions.

AQUACIAT is optimised to use ozone-friendly HFC R410A refrigerant.

This range guarantees compliance with the most demanding requirements for increased seasonal energy efficiency (SEER, SEPR and SCOP) and CO2 reduction to comply with the various applicable European directives and regulations.

Range

■ AQUACIAT LD series

Cooling only version.

■ AQUACIAT ILD series

Reversible heat pump version.

These two versions are optimised to meet the most demanding technical and economic requirements, whilst complying with the new Ecodesign regulations.

Description

AQUACIAT units are packaged machines supplied as standard with the following components:

- Hermetic SCROLL compressors
- Brazed-plate condenser or evaporator water type heat exchanger
- Air-cooled exchanger with axial fan motor assembly
  - all-aluminium micro-channel coil, cooling only version
  - copper tube coil with aluminium fins, reversible heat pump version
- Electrical power and remote control cabinet:
  - 400 V-3ph-50 Hz (+/-10 %) mains power supply + earth
  - transformer fitted as standard on the machine for supplying the remote control circuit with 24 V
- Connect Touch electronic control module
- Casing for outdoor installation

The entire AQUACIAT range complies with the following EC directives and standards:

- Machinery Directive 2006/42/EC
- Electromagnetic compatibility directive 2014/30/EC
- EMC immunity and emissions EN 61800-3 'C3'
- Low Voltage Directive 2014/35/EU
- RoHS 2011/65/EU
- Pressure Equipment Directive (PED) 2014/68/EU
- Machinery directive EN 60-204 -1
- Refrigeration systems and heat pumps EN 378-2
- Commission Regulations (EU) No. 813/2013 (AQUACIAT ILD) and No. 2016/2281 (AQUACIAT LD) implementing directive 2009/125/EC setting the ecodesign requirements

Description

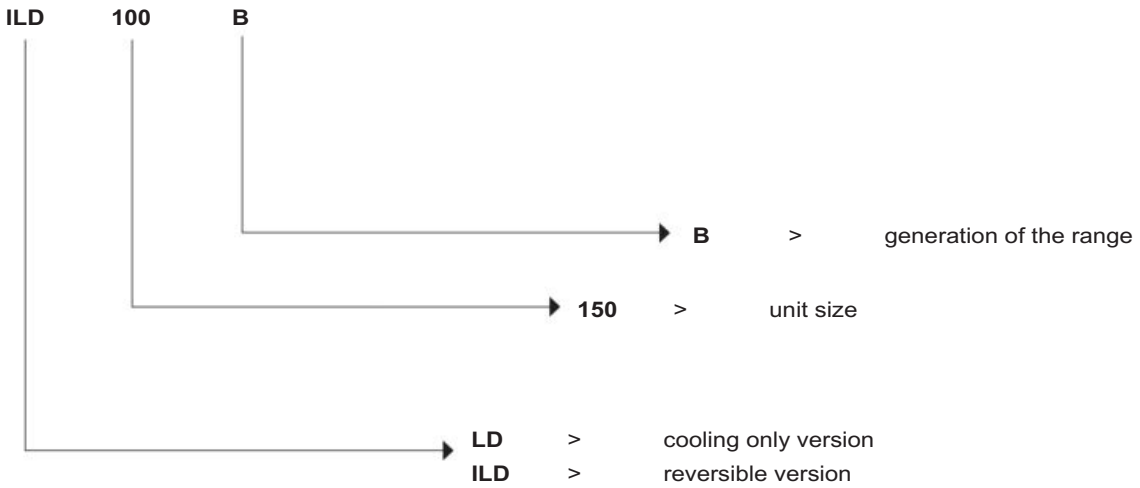

Configuration

LD-ILD	Standard
LD-ILD, XLN option	Standard Xtra Low Noise

DESCRIPTION OF THE MAIN COMPONENTS

Compressors
- Hermetic SCROLL type
- Electronic motor overheating protection
- Crankcase heater
- Mounted on anti-vibration mounts

Water type heat exchanger
- Brazed-plate exchanger
- Condenser or evaporator mode exchanger on the reversible heat pump version
- Plate patterns optimised for high efficiency
- 19-mm armaflex thermal insulation
- Frost protection with heater

Air-cooled exchanger
- Air-cooled exchanger:
  - all-aluminium micro-channel coil, cooling only version
  - copper tube coil with aluminium fins, reversible heat pump version
- Condenser or evaporator mode exchanger on the reversible heat pump version
- propeller fans with composite blades offering an optimised profile, fixed speed as standard or variable speed as an option
- motors – IP 54, class F

Refrigerant accessories
- Dehumidifier filters
- Hygroscopic sight glasses
- Electronic expansion valves
- Service valves on the liquid line
- 4-way cycle inversion valves in cooling/heating mode on the reversible heat pump version

Regulation and safety instruments
- High and low pressure sensors
- Relief valves on the refrigerant circuit
- Water temperature control sensors
- Evaporator antifreeze protection sensor
- Factory-fitted evaporator water flow controller

Electrical cabinet
- Electrical cabinet with IP 44 protection rating
- A connection point without neutral
- Front-mounted main safety switch with handle
- Control circuit transformer
- 24 V control circuit
- Fan and compressor motor circuit breaker
- Fan and compressor motor contactors
- Connect Touch microprocessor-controlled electronic control module
- Wire numbering
- Marking of the main electrical components

Casing
Frame made from RAL7035 light grey & RAL 7024 graphite grey painted panels.

Connect Touch control module
- User interface with 4.3-inch touch screen
- Intuitive, user-friendly navigation using icons
- Clear text display of information available in 6 languages (F-GB-D-E-I-NL)

The electronic control module performs the following main functions:
- Regulation of the water temperature (at the return or at the outlet)
- Regulation of the water temperature based on the outdoor temperature (water law)
- Regulation for low temperature energy storage
- Second setpoint management
- Complete management of compressors with start-up sequence, timer and operating time balancing
- Self-regulating and proactive functions with adjustment of the control to counter parameter drift
- Optimised defrosting with free defrost function to optimise performance at partial load and the SCOP
- In-series staged power control system on the compressors according to the thermal requirements
- Management of compressor short-cycle protection
- Frost protection (exchanger heaters)
- Phase reversal protection
- Management of occupied/unoccupied modes (according to the time schedule)
- Compressor and pump runtime balancing
- Management of the machine operation limit according to outdoor temperature
- Sound level reduction device (night mode according to the user programme) with limitation of compressor capacity and fan speed
- Diagnostics of fault and operating statuses
- Management of a fault memory allowing a log of the last 50 incidents to be accessed, with operating readings taken when the fault occurs
- Master/slave management of the two machines in parallel with operating time balancing and automatic changeover if a fault occurs on one machine
- Weekly and hourly time schedule for the machine, including 16 periods of absence
- Pump standby based on demand (energy saving)
- Calculation of the water flow rate and operating pressure (hydraulic module version)
- Electronic adjustment of the water pump speed and water flow rate (variable-speed pump option)
- Display of all machine parameters (3 access levels, User/Maintenance/Factory, password-protected): temperature, setpoints, pressures, water flow rate (hydraulic version), runtime.

Remote management

Connect Touch is equipped as standard with an RS485 port and an ETHERNET (IP) connection, offering a range of options for remote management, monitoring and diagnostics.

Using the integrated Webserver, a simple internet connection uses the unit's IP address to access the Connect Touch interface on the PC, facilitating everyday management tasks and maintenance operations.

A range of communication protocols are available: MODBUS/JBUS RTU (RS485) or TC/IP as standard, LONWORKS – BACNET IP as an option, enabling most CMS/BMS to be integrated.

Several contacts are available as standard, enabling the machine to be controlled remotely by wired link:
- Automatic operation control: when this contact is open, the machine stops
- Heating/cooling operating mode selection
- Setpoint 1/setpoint 2 selector: when this contact is closed, a second cooling setpoint is activated (energy storage or unoccupied mode, for example)
- Power limitation: closing the contact concerned allows the power or refrigerating consumption of the machine to be limited by stopping one or more compressors (this limit can be set with a parameter)
- Fault reporting: this contact indicates the presence of a major fault which has caused one or both refrigerant circuits to stop
- Operational status reporting indicates that the unit is in production mode.
- Activation control for partial energy recovery using the desuperheater
- Switch control for the customer pump, external to the machine (on/off).
- 0-10V output available for control of a variable flow pump (unit without hydraulic module)

Contacts available as an option:
- Setpoint adjustable via 4-20 mA signal: this input is used to adjust the setpoint in COOLING mode
- On/off control for a boiler
- 4-stage on/off management for additional heaters.

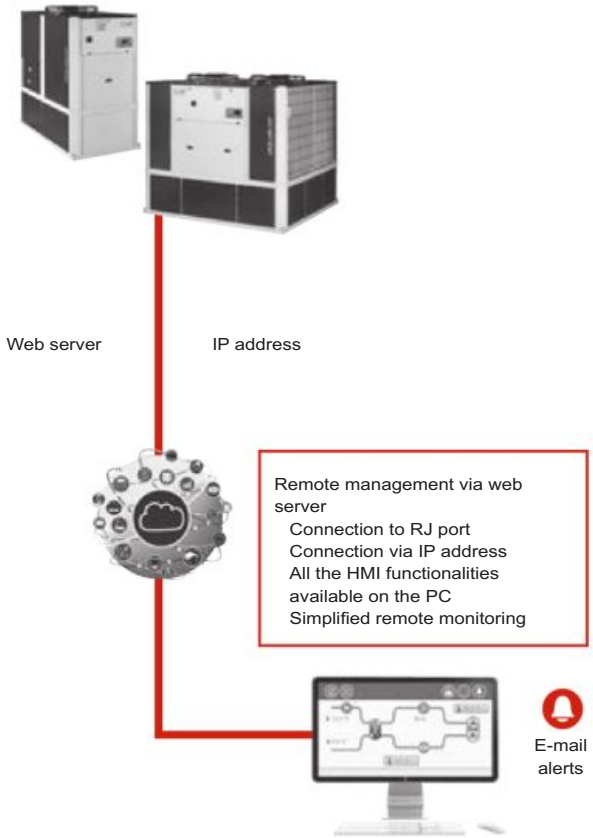

Maintenance

Connect Touch has two maintenance reminder functions as standard, making users aware of the need to regularly perform maintenance operations and to guarantee the service life and performance of the unit. These two functions can be activated independently.

A reminder message appears on the unit's HMI screen, and stays there until it is acknowledged by the maintenance operator. The information and alert relating to these functions are available on the communication bus to be used on the CMS/BMS.

- the scheduled maintenance reminder: when activated, this function enables the period between two maintenance inspections to be set. This period may be set by the operator in either days, months or operating hours, depending on the application.
- The compulsory F-GAS sealing test maintenance reminder: when activated, this function, which is the default factory setting, enables the period between two sealing tests to be selected, according to the refrigerant charge, in compliance with the F-GAS regulations

AVAILABLE OPTIONS

Options	Description	Advantages	LD	ILD
Corrosion protection, traditional coils	Fins made of pre-treated aluminium (polyurethane and epoxy)	Improved corrosion resistance, recommended for moderate marine and urban environments	NO	•
Medium-temperature brine solution	Low temperature chilled water production down to 0°C with ethylene glycol and propylene glycol.	Covers specific applications such as ice storage and industrial processes	•	•
Low-temperature brine solution	Low temperature chilled water production down to -15°C with ethylene glycol and -12°C with propylene glycol.	Covers specific applications such as ice storage and industrial processes	•	•
XtraFan	Unit equipped with specifics variable-speed fans : XtraFans (See specific chapter for maximum available static pressure according to size), each fan equipped with a connection flange & sleeves allowing the connection to the ducting system.	Ducted fan discharge, optimised temperature control, based on the operating conditions and system characteristics	•	•
Xtra Low Noise	Acoustic compressor enclosure and low-speed fans	Noise emission reduction at reduced fan speed	•	•
Protection grilles	Metallic protection grilles	Coil protection against possible impact	•	•
Soft Starter	Electronic starter on each compressor	Reduces start-up current	•	•
EC fans for winter operation cooling mode down to -20 °C	EC fan control via integrated Electronic Commutated motors. One EC fan on each refrigerant circuit	Stable unit operation when the outdoor air temperature is between 0°C and -20°C	•	NO
All year round cooling operation down to -20°C	Fanspeed control via frequency converter	Stable unit operation when the outdoor air temperature is between 0°C and -20°C	NO	•
Hydronic module frost protection	Electric heater on the hydraulic module	Hydraulic module frost protection at low outside temperatures down to -20°C	•	•
Exchanger & hydraulic module frost protection	Electric heater on the water exchanger hydraulic module and optional expansion vessel & water buffer tank	Water exchanger and hydraulic module frost protection between 0°C and -20°C outside air temperature	• with buffer tank option	• with buffer tank option
Partial heat recovery	Unit equipped with one desuperheater on each refrigerant circuit.	Production of free high-temperature hot-water simultaneously with chilled water production (or hot water for Heat pump)	•	•
Master/slave operation	Unit equipped with supplementary water outlet temperature sensor kit to be field-installed allowing master/slave operation of two units connected in parallel	Optimised operation of two units connected in parallel operation with operating time equalisation	•	•
HP single-pump hydraulic module	Evaporator hydraulic module equipped with high-pressure fixed-speed pump, drain valve, air vent and pressure sensors. For more details, refer to the dedicated chapter (expansion vessel not included). Option with built-in safety hydraulic components available.)	Quick and easy installation (plug & play)	• (Low-temperature brine solution only)	•
HP dual-pump hydraulic module	Dual high-pressure water pump, water filter, electronic water flow control, pressure sensors. For more details, refer to the dedicated chapter (expansion vessel not included; option with built-in safety hydraulic components available)	Quick and easy installation (plug & play)	• (Low-temperature brine solution only)	•
HP evap. variable-speed single-pump	Single high-pressure water pump with variable speed drive (VSD), water filter, electronic water flow control, pressure transducers. Multiple possibilities of water flow control. For more details, refer to the dedicated chapter (expansion vessel not included; option with built-in hydraulic safety components available)	Quick and easy installation (plug & play), significant pumping energy cost savings (more than two-thirds), tighter water flow control, improved system reliability	•	•
HP variable-speed dual pump.	Dual high-pressure water pump with variable speed drive (VSD), pressure transducers. Multiple possibilities of water flow control. For more details, refer to the dedicated chapter (expansion vessel not included; option with built-in hydraulic safety components available)	Quick and easy installation (plug & play), significant pumping energy cost savings (more than two-thirds), tighter water flow control, improved system reliability	•	•
Lon gateway	Bi-directional communication board complying with Lon Talk protocol	Connects the unit by communication bus to a building management system	•	•

• ALL MODELS
(*) Standard equipment on ILD version
Refer to the selection tool to find out which options are not compatible.

Options	Description	Advantages	LD	ILD
Bacnet over IP	Two-directional high-speed communication using BACnet protocol over Ethernet network (IP)	Easy and high-speed connection by ethernet line to a BMS. Allows access to multiple unit parameters	•	•
External boiler management	Control board factory-installed on the unit to control a boiler	Extended remote control capabilities to a boiler on/off command. Facilitates control of a basic heating system	NO	•
Management of electric heaters	Control board factory-installed on the unit with additional inputs/ outputs in order to manage up to 4 external heating stages (electric heaters, etc.)	Expands the remote control capacities to include a maximum of four electric heaters. Facilitates control of a basic heating system	NO	•
Compliance with Russian regulations	EAC certification	Compliance with Russian regulations	•	•
LP single-pump hydraulic module	Single low-pressure water pump, water filter, electronic water flow control, pressure sensors. For more details, refer to the dedicated chapter (expansion vessel not included; option with built-in hydraulic safety components available)	Quick and easy installation (plug & play)	NO	•
LP dual-pump hydraulic module	Dual low-pressure water pump, water filter, electronic water flow control, pressure transducers. For more details, refer to the dedicated chapter (expansion vessel not included; option with built-in hydraulic safety components available)	Quick and easy installation (plug & play)	NO	•
Protect2 anti-corrosion protection	Coating which uses a conversion process to alter the aluminium surface into a coating which forms an integral part of the coil. Complete immersion in a bath to ensure 100% coverage. No heat transfer variation, salt spray resistance test for 4000 hours (ASTM B117)	Protect2 Improved corrosion resistance of the MCHE coils by 2, recommended for use in moderately corrosive environments	•	NO
MCHE anti-corosion protection Protect4	Extremely durable and flexible epoxy polymer coating applied on micro channel coils by electro coating process, final UV protective topcoat. Minimal heat transfer variation, tested 6000 hours constant neutral salt spray per ASTM B117, superior impact resistance per ASTM D2794	Protect4 Improved corrosion resistance of the MCHE coils by 4, recommended for use in corrosive environments	•	NO
Evaporator screw connection sleeves (kit)	Evaporator inlet/outlet screw connection sleeves	Allows unit connection to a screw connector	•	•
Reinforced ECM filtration for fan VFD	Fan variable frequency drive compliance to IEC 61800-3 C1 class	Allows unit installation in domestic residential environment by reducing electromagnetic interferences	• with variable speed fans	• with variable speed fans
Reinforced ECM filtration for pump VFD	Pump variable frequency drive compliance to IEC 61800-3 C1 class	Allows unit installation in domestic residential environment by reducing electromagnetic interferences	• With variable speed pump	• With variable speed pump
Expansion vessel	6 bar expansion vessel integrated in the hydraulic module (requires hydraulic module option)	Easy and fast installation (plug & play), & protection of closed water systems from excessive pressure	• with pump option	• with pump option
M2M supervision (accessory)	Monitoring solution which allows customers to track and monitor their equipment remotely in real time	Real-time expert technical support to improve equipment availability and reports at customer hand to monitor and optimize operating equipment.	•	•
Water buffer tank module	Integrate water buffer tank	Avoid short cycle on compressors and ensure a stable water in the loop	•	•
Water buffer tank module with extra heater	Integrates a water buffer tank module with a 16/31/45 kW extra heater	The tank avoids short cycles on the compressors and ensures the water in the loop is stable. The extra heater provides additional or backup heating in heating mode.	NO	150-300
Anti-vibration mounts	Elastomer anti-vibration mounts to be placed under the unit (material classified B2 fire class according to DIN 4102).	Isolate the unit from the building, avoid transmission of vibration and associate noise to the building. Must be associated with a flexible connection on water side	•	•
Exchangers flexibles connection (kit)	Flexible connections on the exchanger water side	Easy to install. Limits the transmission of vibrations to the water network	•	•
Exchangers water filter (kit)	Water filter	Eliminate dust in the water network	• without pump option	• without pump option
Setpoint adjustable by 4-20 mA signal	Connections to allow a 4-20 mA signal input	Simplified energy management, enabling the setpoint to be set by a 4-20 mA external signal	•	•
Free cooling drycooler management	Control and connections of an Opera or Vextra free cooling drycooler equipped with the FC control box option	Easy system management, control capabilities extended to a drycooler used in free cooling mode	•	NO

• ALL MODELS
Refer to the selection tool to find out which options are not compatible.

AVAILABLE OPTIONS

Options	Description	Advantages	LD	ILD
Evap. single pump power/ control circuit	Unit equipped with an electrical power and control circuit for one pump evaporator side	Quick and easy installation: the control of fixed speed pumps is embedded in the unit control	• (Low-temperature brine solution and HP pump only)	•
Evap. dual pumps power/ control circuit	Unit equipped with an electrical power and control circuit for two pumps evaporator side	Quick and easy installation: the control of fixed speed pumps is embedded in the unit control	• (Low-temperature brine solution and HP pump only)	•
Variable speed single pump power/control circuit	Unit equipped with an electrical power and control circuit for variable speed single pump	Quick and easy installation: the control of variable-speed pumps is built into the control unit	•	NO
Variable speed dual-pump power/control circuit	Unit equipped with an electrical power and control circuit for variable speed dual pump	Quick and easy installation: the control of variable-speed pumps is built into the control unit	•	NO
Desuperheater flexible connection (kit)	Flexible connections on the desuperheater water side	Easy to install. Limits the transmission of vibrations to the water network	•	•

• ALL MODELS
Refer to the selection tool to find out which options are not compatible.

TECHNICAL CHARACTERISTICS - COOLING ONLY

AQUACIAT LD				150	180	200	240	260	300	360	390	450	520	600
Cooling														
Standard unit Full load performances*	CA1	Nominal capacity	kW	39,6	44	51,2	58,1	67,2	78,9	86,7	97,1	114	135	156
		EER	kW/kW	2,87	2,76	2,67	2,66	2,72	2,70	2,73	2,73	2,67	2,70	2,65
		Eurovent class		C	C	D	D	C	C	C	C	D	C	D
	CA2	Nominal capacity	kW	53,0	58,9	68,5	80,9	84,7	98,3	114	126	151	171	194
		EER	kW/kW	3,44	3,32	3,12	3,31	2,97	3,06	3,18	3,09	3,10	2,99	3,01
Standard unit Seasonal energy efficiency**		**SEER $_{12/7°C}$ Comfort low temp.**	**kWh/kWh**	**3,86**	**3,97**	**4,03**	**3,92**	**3,79**	**3,85**	**4,16**	**4,16**	**4,07**	**3,93**	**4,17**
		ηs cool $_{12/7°C}$	**%**	**152**	**156**	**158**	**154**	**149**	**151**	**164**	**163**	**160**	**154**	**164**
		SEPR $_{12/7°C}$ Process high temp.	**kWh/kWh**	**5,27**	**5,31**	**5,26**	**5,09**	**4,92**	**5,16**	**4,95**	**5,12**	**5,51**	**4,90**	**5,32**
Unit with low-temperature brine solution option Seasonal energy efficiency**		**SEPR $_{-2/-8°C}$ Process medium temp.**	**kWh/kWh**	**2,88**	**3,21**	**2,91**	**3,09**	**3,04**	**2,75**	**2,97**	**3,12**	**3,10**	**3,07**	**3,02**
Part Load integrated values		IPLV.SI	kW/kW	4,510	4,680	4,780	4,560	4,250	4,380	5,540	4,530	4,530	4,280	4,620
Sound levels														
Standard unit														
Sound power(1)			dB(A)	80	81	81	81	87	87	84	84	84	90	90
Sound pressure at 10 m(2)			dB(A)	49	49	49	49	55	55	52	52	52	58	58
Unit + Xtra Low Noise option														
Sound power(1)			dB(A)	79	80	80	80	80	80	83	83	83	83	83
Sound pressure at 10 m(2)			dB(A)	48	48	48	48	48	48	51	51	51	51	51
Dimensions														
Length			mm	1090	1090	1090	1090	1090	1090	2270	2270	2270	2270	2270
Width			mm	2109	2109	2109	2109	2109	2109	2123	2123	2123	2123	2123
Height			mm	1440	1440	1440	1440	1440	1440	1440	1440	1440	1440	1440
Height with Buffer Tank Module			mm	2040	2040	2040	2040	2040	2040	2040	2040	2040	2040	2040
Operating weight with micro-channel coils(3)														
Standard unit			kg	422	430	436	449	445	463	753	762	771	829	854
Unit + High pressure single pump option			kg	463	472	478	491	487	505	820	829	842	903	928
Unit + High pressure dual pump option			kg	489	498	504	517	513	531	865	874	891	940	965
Unit + high pressure single pump + Water buffer tank module option			kg	859	868	874	887	883	901	1253	1262	1275	1336	1361
Unit + high pressure dual-pump + Water buffer tank module option			kg	885	894	900	913	909	927	1298	1307	1324	1373	1398
Compressors				Hermetic Scroll 48.3 r/s										
Circuit A			Qty	2	2	2	2	2	2	3	3	3	2	2
Circuit B			Qty	-	-	-	-	-	-	-	-	-	2	2
No. of power stages			Qty	2	2	2	2	2	2	3	3	3	4	4
Refrigerant with micro-channel coils(3)			R410A											
Circuit A			kg	4,7	5,3	5,9	6,7	6,2	7,3	10,7	10,8	11,4	6,5	7,4
			tCO_2e	9,8	11,1	12,3	14,0	12,9	15,2	22,3	22,6	23,8	13,6	15,5
Circuit B			kg	-	-	-	-	-	-	-	-	-	6,5	7,4
			tCO_2e	-	-	-	-	-	-	-	-	-	13,6	15,5

*	In accordance with standard EN14511-3:2013.
**	In accordance with standard EN14825:2016, average climate
CA1	Cooling mode conditions: evaporator water inlet/outlet temperature 12 °C/7 °C, outdoor air temperature 35 °C, evaporator fouling factor 0 m^2. k/W
CA2	Cooling mode conditions: evaporator water inlet/outlet temperature 23 °C/18 °C, outdoor air temperature 35 °C, evaporator fouling factor 0 m^2. k/W
ηs cool$_{12/7°C}$ & SEER $_{12/7°C}$	**Values in bold comply with Ecodesign Regulation (EU) No. 2016/2281 for Comfort application**
SEPR $_{12/7°C}$	**Values in bold comply with Ecodesign Regulation (EU) No. 2016/2281 for Process application**
SEPR $_{-2/-8°C}$	**Values in bold comply with Ecodesign Regulation (EU) No. 2015/1095 for Process application**
IPLV.SI	Calculated as per AHRI standard 551-591 (SI).
-	Not applicable
(1)	in dB ref=10^{-12} W, 'A' weighted. Declared dual-number noise emission values in accordance with ISO 4871 (with an associated uncertainty of +/-3 dB(A)). Measured in accordance with ISO 9614-1.
(2)	In dB ref 20 µPa, 'A' weighted. Declared dual-number noise emission values in accordance with ISO 4871 (with an associated uncertainty of +/-3 dB(A)). For information, calculated from the sound power level Lw(A).
(3)	Values are guidelines only. Refer to the unit name plate.

EUROVENT CERTIFIED PERFORMANCE
www.eurovent-certification.com

Eurovent certified values

TECHNICAL CHARACTERISTICS - COOLING ONLY

AQUACIAT LD		150	180	200	240	260	300	360	390	450	520	600
Oil charge		POE SZ160 (EMKARATE RL 32-3MAF).										
Circuit A	l	5,8	7,2	7,2	7,2	7	7	10,8	10,5	10,5	7	7
Circuit B	l	-	-	-	-	-	-	-	-	-	7	7
Control system		Connect Touch Control										
Minimum capacity	%	50	50	50	50	50	50	33	33	33	25	25
Air heat exchanger		All-aluminium micro-channel coil										
Fans - Standard unit												
Quantity		1	1	1	1	1	1	2	2	2	2	2
Maximum total air flow	l/s	4111	4111	4111	4167	5500	5583	8056	8056	8222	11000	11167
Maximum rotation speed	r/s	12	12	12	12	16	16	12	12	12	16	16
Water heat exchanger		Direct expansion, plate heat exchanger										
Water volume	l	2,6	3	3,3	4	4,8	5,6	8,7	9,9	11,3	12,4	14,7
Max. water-side operating pressure without hydraulic module	kPa	1000	1000	1000	1000	1000	1000	1000	1000	1000	1000	1000
Hydraulic module (option)												
Single or dual pump (as selected)		Pump, victaulic screen filter, relief valve, vent valves (water and air), pressure sensors										
Expansion vessel volume (option)	l	12	12	12	12	12	12	35	35	35	35	35
Expansion vessel pressure(4)	bar	1	1	1	1	1	1	1,5	1,5	1,5	1,5	1,5
Max. water-side operating pressure with hydraulic module	kPa	400	400	400	400	400	400	400	400	400	400	400
Water buffer tank module (option)												
Single or dual pump (as selected)		Pump, victaulic screen filter, relief valve, vent valves (water and air), pressure sensors										
Water volume	l	250	250	250	250	250	250	250	250	250	250	250
Expansion vessel volume (option)	l	18	18	18	18	18	18	35	35	35	35	35
Expansion vessel pressure(4)	bar	1	1	1	1	1	1	1,5	1,5	1,5	1,5	1,5
Max. water-side operating pressure with hydraulic module	kPa	400	400	400	400	400	400	400	400	400	400	400
Water connections with or without hydraulic module		Victaulic										
Connections	inch	2	2	2	2	2	2	2	2	2	2	2
External diameter	mm	60,3	60,3	60,3	60,3	60,3	60,3	60,3	60,3	60,3	60,3	60,3
Casing paint		Colour code RAL 7035 and RAL 7024										

(4) Upon delivery, the standard preinflation of the vessels is not necessarily at the optimum value for the installation. In order to enable free variation of the water volume, adjust the inflation pressure to a pressure close to that corresponding to the static head of the installation. Fill the installation with water (bleeding out any air) at a pressure 10 to 20 kPa higher than that of the vessel.

TECHNICAL CHARACTERISTICS - REVERSIBLE HEAT PUMP

AQUACIAT ILD				150	180	200	240	260	300	302	360	390	450	520	600
Heating															
Standard unit Full load performances*	HA1	Nominal capacity	kW	42,3	46,4	53,2	61,2	68,0	77,6	81,7	92,2	100	116	135	155
		COP	kW/kW	3,69	3,69	3,76	3,72	3,64	3,46	3,78	3,80	3,76	3,68	3,61	3,47
	HA2	Nominal capacity	kW	41,5	46,3	51,7	59,3	65,9	75,0	78,9	89,5	97,4	112	130	150
		COP	kW/kW	3,05	3,02	3,01	3,01	2,98	2,85	3,11	3,05	3,06	3,00	2,94	2,86
Standard unit Seasonal energy efficiency**	HA1	**$SCOP_{30/35°C}$**	**kW/kW**	**3,32**	**3,39**	**3,53**	**3,40**	**3,40**	**3,28**	**3,51**	**3,50**	**3,57**	**3,54**	**3,44**	**3,42**
		$\eta s\ heat_{30/35°C}$	**%**	**130**	**133**	**138**	**133**	**133**	**128**	**137**	**137**	**140**	**139**	**135**	**134**
		P_{rated}	kW	35,5	31,6	36,3	43,8	50,1	55,7	56,8	81,5	72,3	84,2	99,4	111
		Energy labelling		A+	A+	A+	A+	A+	A+	A+	-	-	-	-	-
Cooling															
Standard unit Full load performances*	CA1	Nominal capacity	kW	37,7	43,1	49,4	58,0	63,1	70,2	77,0	84,9	95,1	112,4	130,5	148,2
		EER	kW/kW	2,80	2,66	2,61	2,72	2,66	2,43	2,75	2,66	2,66	2,65	2,73	2,54
		Eurovent class		C	D	D	C	D	E	C	D	D	D	C	D
	CA2	Nominal capacity	kW	47,1	53,9	62,7	70,7	78,2	88,5	96,5	106,9	116,6	141,9	161,6	185,2
		EER	kW/kW	3,23	3,11	3,04	3,08	3,04	2,81	3,14	3,09	3,05	3,05	3,12	2,88
Standard unit Seasonal energy efficiency**		SEER $_{12/7°C}$ Comfort low temp.	kWh/kWh	3,64	3,67	3,70	3,53	3,49	3,37	3,83	3,70	3,76	4,00	3,65	3,62
		SEPR $_{12/7°C}$ Process high temp.	kWh/kWh	4,92	4,95	4,74	4,53	4,44	4,72	5,16	4,67	4,62	5,15	4,59	4,95
Unit with low-temperature brine solution option Seasonal energy efficiency**		SEPR $_{-2/-8°C}$ Process medium temp.	kWh/kWh	2,58	2,58	2,61	2,96	2,98	2,86	2,70	2,86	3,04	2,94	2,80	2,68
Part Load integrated values		IPLV.SI	kW/kW	4,464	4,447	4,409	4,127	4,102	4,033	4,475	4,314	4,378	4,795	4,246	4,295
Sound levels															
Standard unit															
Sound power(1)			dB(A)	80	81	81	86	87	87	84	84	84	84	90	90
Sound pressure at 10 m(2)			dB(A)	49	49	49	55	55	55	52	52	52	52	58	58
Unit + Xtra Low Noise option															
Sound power(1)			dB(A)	79	80	80	80	80	80	83	83	83	83	83	83
Sound pressure at 10 m(2)			dB(A)	48	48	48	48	48	48	51	51	51	51	51	51
Dimensions															
Length			mm	1090	1090	1090	1090	1090	1090	2270	2270	2270	2270	2270	2270
Width			mm	2109	2109	2109	2109	2109	2109	2123	2123	2123	2123	2123	2123
Height			mm	1440	1440	1440	1440	1440	1440	1440	1440	1440	1440	1440	1440
Height with Buffer Tank Module			mm	2040	2040	2040	2040	2040	2040	2040	2040	2040	2040	2040	2040
Operating weight(3)															
Standard unit			kg	497	506	543	549	559	564	777	896	905	979	1053	1057
Unit + High pressure single pump option			kg	539	548	585	591	601	606	844	963	972	1050	1127	1131
Unit + High pressure dual pump option			kg	565	574	611	617	627	632	889	1008	1017	1098	1164	1168
Unit + high pressure single pump + Water buffer tank module option			kg	935	943	981	986	996	1001	1276	1395	1404	1482	1560	1563
Unit + high pressure dual-pump + Water buffer tank module option			kg	961	969	1006	1012	1022	1027	1321	1440	1449	1531	1597	1600

*	In accordance with standard EN14511-3:2013.
**	In accordance with standard EN14825:2016, average climate conditions.
HA1	Conditions in heating mode: water type heat exchanger water outlet/inlet temperature 30 °C/35 °C, outside air temperature tdb/twb = 7 °C db/6 °C wb, evaporator fouling factor 0 m^2. k/W
HA2	Conditions in heating mode: water type heat exchanger water outlet/inlet temperature 40 °C/45 °C, outside air temperature tdb/twb = 7 °C db/6 °C wb, evaporator fouling factor 0 m^2. k/W
CA1	Cooling mode conditions: evaporator water inlet/outlet temperature 12 °C/7 °C, outdoor air temperature 35 °C, evaporator fouling factor 0 m^2. k/W
CA2	Cooling mode conditions: evaporator water inlet/outlet temperature 23 °C/18 °C, outdoor air temperature 35 °C, evaporator fouling factor 0 m^2. k/W
$\eta s\ heat_{30/35°C}$ & $SCOP_{30/35°C}$	**Values in bold comply with Ecodesign Regulation (EU) No. 813/2013 for heating application**
SEER $_{12/7°C}$ & SEPR $_{12/7°C}$	Values calculated according to EN14825:2016
SEPR $_{-2/-8°C}$	Values calculated according to EN14825:2016
IPLV.SI	Calculated as per AHRI standard 551-591 (SI).
(1)	in dB ref=10^{-12} W, 'A' weighted. Declared dual-number noise emission values in accordance with ISO 4871 (with an associated uncertainty of +/-3dB(A)). Measured in accordance with ISO 9614-1 and certified by EUROVENT
(2)	In dB ref 20 µPa, 'A' weighted. Declared dual-number noise emission values in accordance with ISO 4871 (with an associated uncertainty of +/-3dB(A)). Value calculated from the sound power level Lw(A).
(3)	Weights given as a guide. Refer to the unit name plate.

EUROVENT CERTIFIED PERFORMANCE
www.eurovent-certification.com

Eurovent certified values

TECHNICAL CHARACTERISTICS - REVERSIBLE HEAT PUMP

AQUACIAT ILD		150	180	200	240	260	300	302	360	390	450	520	600
Operating weight(3)													
Unit + high pressure single pump option + Water buffer tank module with extra heaters (16 kW)	kg	1018	1026	1064	1069	1079	1084						
Unit + high pressure dual pump option + Water buffer tank module with extra heaters (16 kW)	kg	1044	1052	1089	1095	1105	1110						
Unit + high pressure single pump option + Water buffer tank module with extra heaters (31 kW and 45 kW)	kg	1022	1030	1068	1073	1083	1088						
Unit + high pressure dual pump option + Water buffer tank module with extra heaters (31 kW and 45 kW)	kg	1048	1056	1093	1099	1109	1114						
Compressors		Hermetic Scroll 48.3 r/s											
Circuit A	Qty	2	2	2	2	2	2	2	3	3	3	2	2
Circuit B	Qty	-	-	-	-	-	-	-	-	-	-	2	2
No. of power stages	Qty	2	2	2	2	2	2	2	3	3	3	4	4
Refrigerant (3)		R-410A											
Circuit A	kg	12.5	13,5	16,5	17,5	18	16,5	21,5	27,5	28,5	33	19	18,5
	tCO_2e	26.1	28,2	34,5	36,5	37,6	34,5	44,9	57,4	59,5	68,9	39,7	38,6
Circuit B	kg	-	-	-	-	-	-	-	-	-	-	19	18,5
	tCO_2e	-	-	-	-	-	-	-	-	-	-	39,7	38,6
Oil charge		POE SZ160 (EMKARATE RL 32-3MAF).											
Circuit A	l	5.8	7,2	7,2	7,2	7,0	7,0	7,2	7,0	7,0	7,0	7,0	7,0
Circuit B	l	-	-	-	-	-	-	-	-	-	-	7,0	7,0
Power control		Connect Touch Control											
Minimum capacity	%	50	50	50	50	50	50	50	33	33	33	25	25
Air heat exchanger		Grooved copper tube and aluminium fins											
Fans													
Quantity	1	1	1	1	1	1	1	2	2	2	2	2	2
Maximum total air flow	l/s	3694	3694	3889	5278	5278	5278	7778	7389	7389	7778	10556	10556
Maximum rotation speed	r/s	12	12	12	16	16	16	12	12	12	12	16	16
Water heat exchanger		Direct expansion, plate heat exchanger											
Water volume	l	2.6	3	4	4,8	4,8	5,6	8,7	8,7	9,9	11,3	12,4	14,7
Max. water-side operating pressure without hydraulic module	kPa	1000	1000	1000	1000	1000	1000	1000	1000	1000	1000	1000	1000
Hydraulic module (option)													
Single or dual pump (as selected)		Pump, victaulic screen filter, relief valve, vent valves (water and air), pressure sensors											
Expansion vessel volume (option)	l	12	12	12	12	12	12	12	35	35	35	35	35
Expansion vessel pressure(4)	bar	1	1	1	1	1	1	1	1,5	1,5	1,5	1,5	1,5
Max. water-side operating pressure with hydraulic module	kPa	400	400	400	400	400	400	400	400	400	400	400	400
Water buffer tank module (option)													
Single or dual pump (as selected)		Pump, victaulic screen filter, relief valve, vent valves (water and air), pressure sensors											
Water volume	l	250	250	250	250	250	250	250	250	250	250	250	250
Expansion vessel volume (option)	l	18	18	18	18	18	18	18	35	35	35	35	35
Expansion vessel pressure(4)	bar	1	1	1	1	1	1	1	1,5	1,5	1,5	1,5	1,5
Max. water-side operating pressure with hydraulic module	kPa	400	400	400	400	400	400	400	400	400	400	400	400
Water buffer tank module with extra heaters (option)													
Single or dual pump (as selected)		Pump, victaulic screen filter, relief valve, vent valves (water and air), pressure sensors, vent at the top of the tank											
16 kW extra heaters in the tank	kW	2 x 8 kW	2 x 8 kW	2 x 8 kW	2 x 8 kW	2 x 8 kW	2 x 8 kW						
31 kW extra heaters in the tank	kW	2 x 8 kW + 1 x 15 kW	2 x 8 kW + 1 x 15 kW	2 x 8 kW + 1 x 15 kW	2 x 8 kW + 1 x 15 kW	2 x 8 kW + 1 x 15 kW	2 x 8 kW + 1 x 15 kW						
45 kW extra heaters in the tank	kW	3 x 15 kW	3 x 15 kW	3 x 15 kW	3 x 15 kW	3 x 15 kW	2 x 8 kW						
Water connections with or without hydraulic module		Victaulic											
Connections	inch	2	2	2	2	2	2	2	2	2	2	2	2
External diameter	mm	60.3	60,3	60,3	60,3	60,3	60,3	60,3	60,3	60,3	60,3	60,3	60,3
Casing paint		Colour code RAL 7035 and RAL 7024											

(3) Weights given as a guide. Refer to the unit name plate.
(4) Upon delivery, the standard preinflation of the vessels is not necessarily at the optimum value for the installation. In order to enable free variation of the water volume, adjust the inflation pressure to a pressure close to that corresponding to the static head of the installation. Fill the installation with water (bleeding out any air) at a pressure 10 to 20 kPa higher than that of the vessel.

ELECTRICAL DATA

LD / ILD Standard unit (without hydraulic module)		150	180	200	240	260	300	302	360	390	450	520	600
Power circuit													
Nominal voltage	V-ph-Hz	400-3-50											
Voltage range	V	360-440											
Control circuit supply		24 V, via internal transformer											
Rated unit current draw(3)													
Circuit A&B	A	25,6	29	33	36	42,4	52,8	53,4	55,4	61,7	77,3	84,8	105,6
Maximum unit power input(2)													
Circuit A&B	kW	19,5	22,3	24,5	27,9	31,2	35,8	35,6	42,3	45,6	52,5	62,4	71,6
Unit power factor at maximum capacity(2)		0,83	0,81	0,81	0,83	0,81	0,78	0,78	0,83	0,81	0,79	0,81	0,78
Unit max. operating current (Un-10%)(5)													
Circuit A&B	A	38	49,2	51,4	58,4	74,8	79,6	80,2	89	110,3	117,5	149,6	159,2
Maximum current draw (Un)(4)													
Circuit A&B - Standard unit	A	34,8	44,8	46,8	52,8	67	73	73,6	80,6	98,6	107,6	134	146
Maximum start-up current, standard unit (Un)(1)													
Circuit A&B	A	113,8	134,8	142,8	145,8	176	213	213,6	173,6	207,6	247,6	243	286
Maximum start-up current, unit with soft start (Un)(1)													
Circuit A&B	A	74,7	86,5	93,8	96,2	114,4	139,8	139,8	130,4	155,4	181,4	186,4	215,4

(1) Maximum instantaneous starting current (maximum operating current of the smallest compressor(s) + fan current(s) + locked rotor current of the largest compressor).
(2) Power input, at the unit's permanent operating limits (indication given on the unit's name plate).
(3) Standardised EUROVENT conditions, water type heat exchanger input/output = 12°C/7°C, outdoor air temperature = 35°C.
(4) Maximum unit current at 400V, during non-permanent operation (indication given on the unit's name plate)
(5) Maximum unit current at 360V, during non-permanent operation

Short circuit current withstand capability (TN system(1))

AQUACIAT LD / ILD		150	180	200	240	260	300	302	360	390	450	520	600
Value without upstream protection													
Short time assigned current (1s) - Icw	kA eff	3,36	3,36	3,36	3,36	3,36	3,36	3,36	5,62	5,62	5,62	5,62	5,62
Allowable peak assigned current - Ipk	kA pk	20	20	20	20	20	15	15	20	20	15	20	15
Value with upstream protection													
Conditional short circuit assigned current Icc	kA eff	40	40	40	40	40	40	40	40	40	40	30	30
Associated Schneider circuit breaker - Compact type range(2)		NS100H	NS100H	NS100H	NS100H	NS100H	NS100H	NS100H	NS100H	NS160H	NS160H	NS250H	NS250H

(1) Type of system earthing
(2) If another current limiting protection device is used, its time-current trip and I²t thermal stress characteristics must be at least equivalent to those of the recommended Schneider circuit breaker.
The short-circuit withstand values given above were determined for the TN system.

Dimensions

AQUACIAT LD-ILD 150 to 300 Without buffer tank

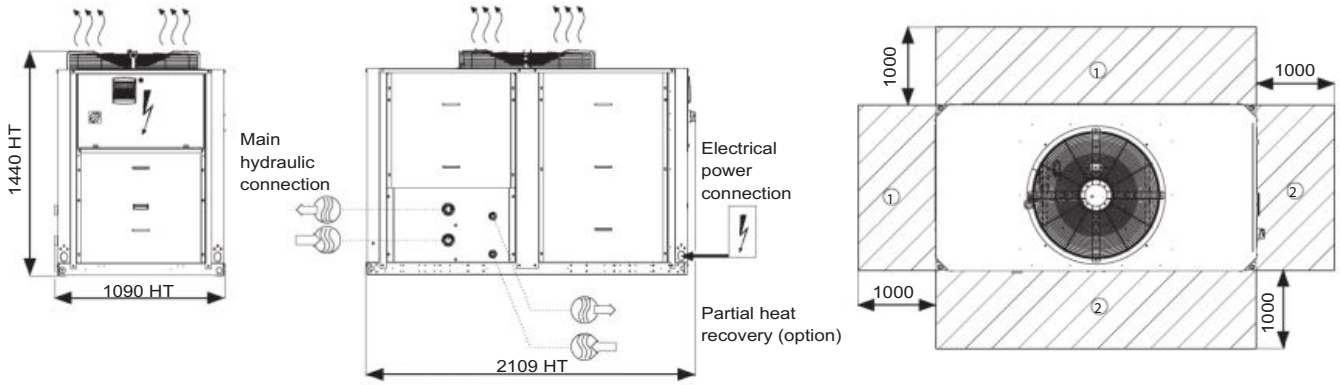

AQUACIAT LD-ILD 150 to 300 With buffer tank

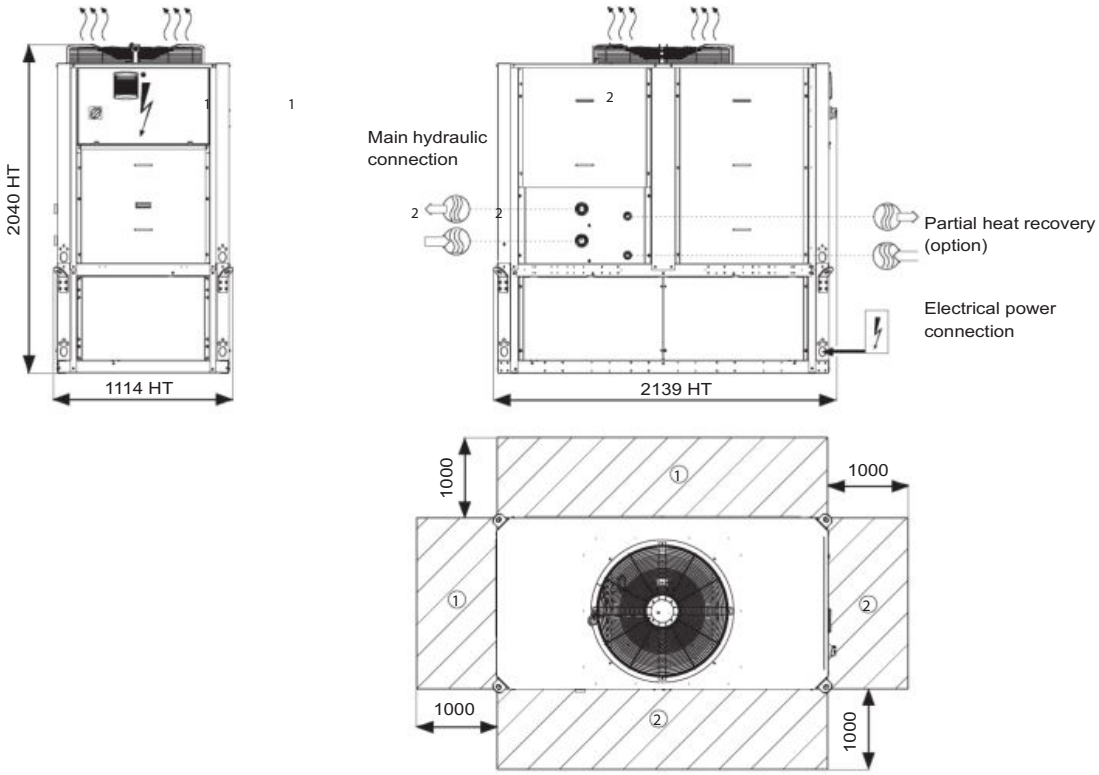

Key
All dimensions in mm

- B Clearance required for maintenance and air flow
- C Clearance recommended for coil removal
- Water inlet
- Water outlet
- Air outlet, do not obstruct
- Electrical cabinet

NOTES:

Non-contractual drawings.

When designing a system, refer to the certified dimensional drawings provided with the unit or available on request.

Please refer to the certified dimensional drawings for the positioning of the fixing points, weight distribution points and centre of gravity coordinates.

Dimensions

■ AQUACIAT LD-ILD 302 to 600 Without buffer tank

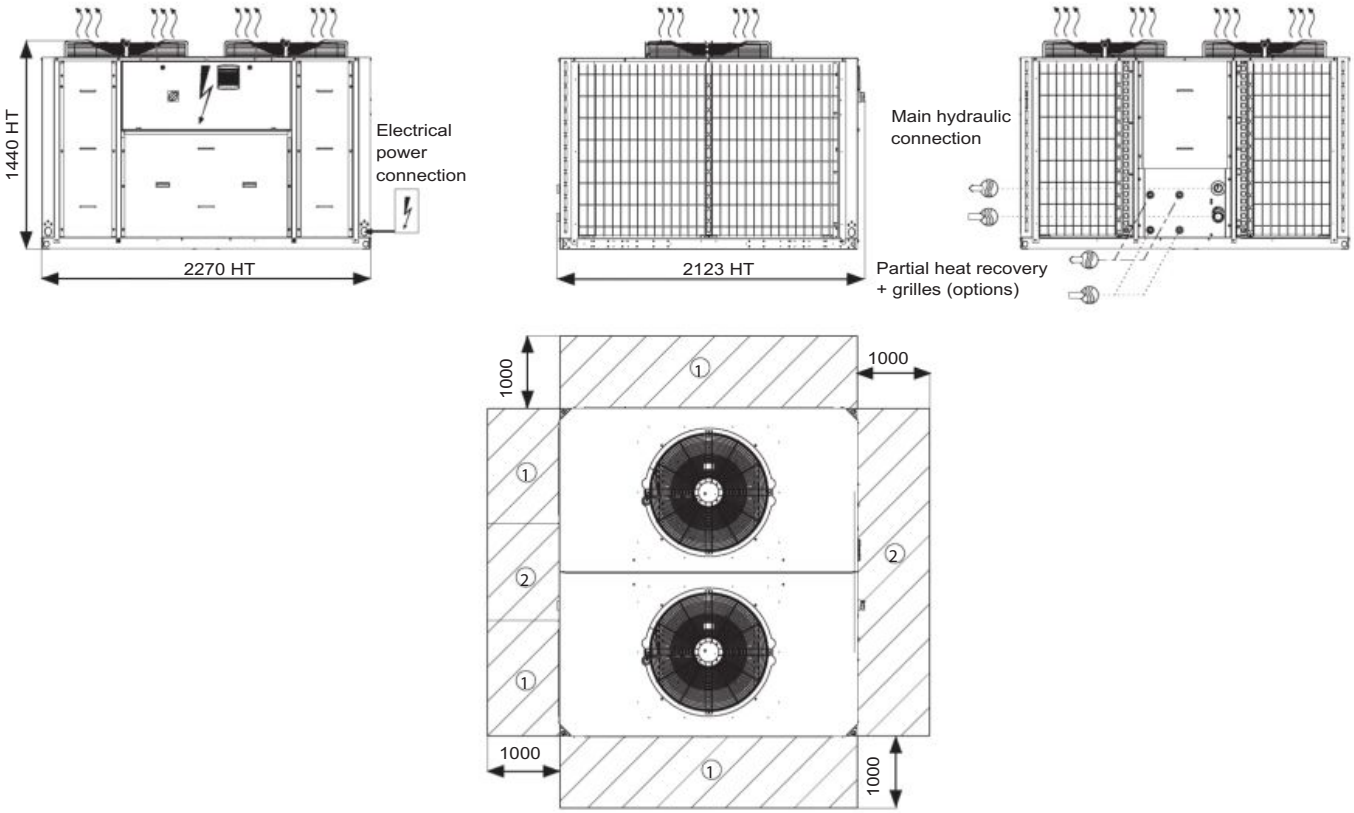

Key
All dimensions in mm

- B Clearance required for maintenance and air flow
- C Clearance recommended for coil removal
- Water inlet
- Water outlet
- Air outlet, do not obstruct
- Electrical cabinet

NOTES:

Non-contractual drawings.

When designing a system, refer to the certified dimensional drawings provided with the unit or available on request.

Please refer to the certified dimensional drawings for the positioning of the fixing points, weight distribution points and centre of gravity coordinates.

Dimensions

■ AQUACIAT LD-ILD 302 to 600 With buffer tank

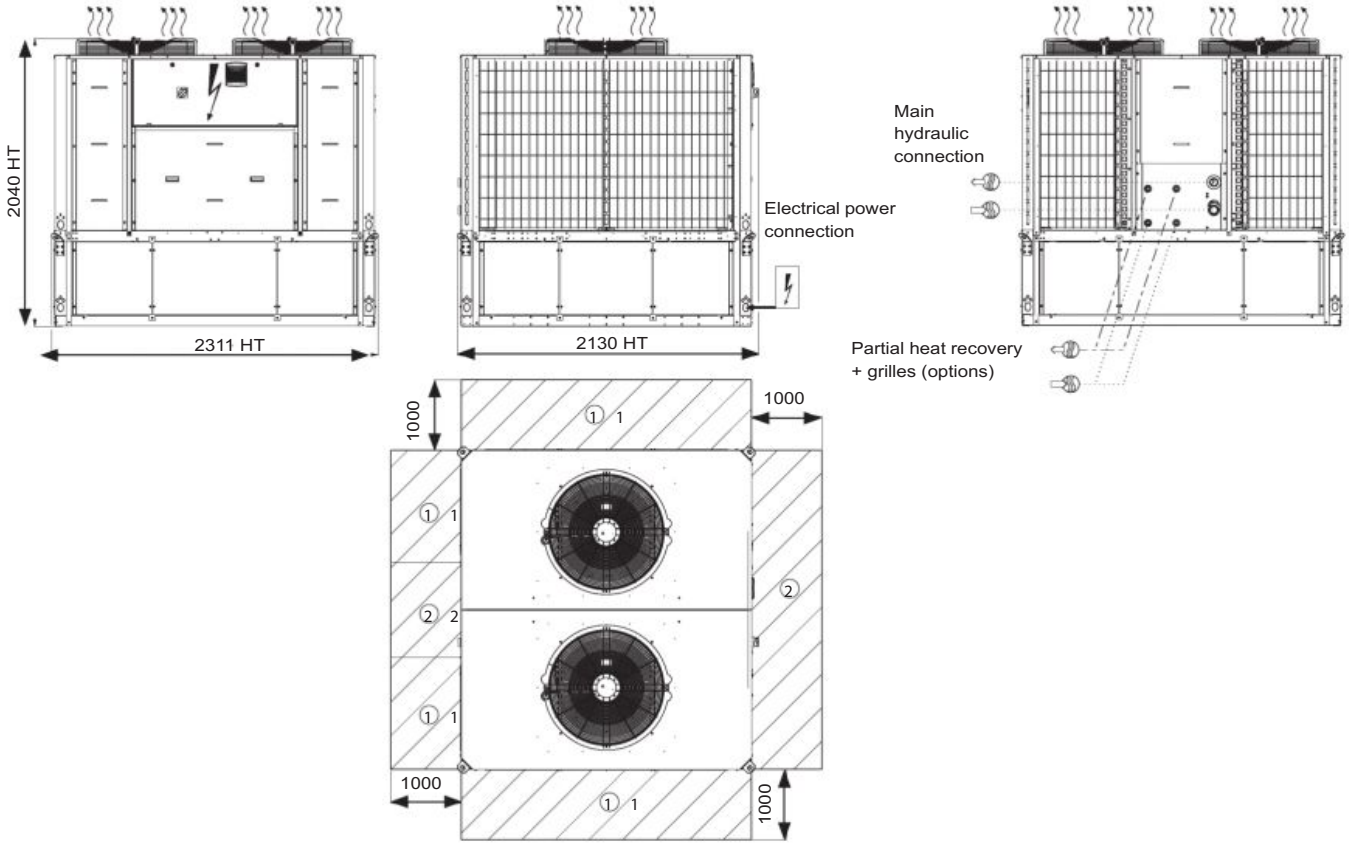

Key
All dimensions in mm

- B Clearance required for maintenance and air flow
- C Clearance recommended for coil removal
- Water inlet
- Water outlet
- Air outlet, do not obstruct
- Electrical cabinet

NOTES:

Non-contractual drawings.

When designing a system, refer to the certified dimensional drawings provided with the unit or available on request.

Please refer to the certified dimensional drawings for the positioning of the fixing points, weight distribution points and centre of gravity coordinates.

AQUACIAT CALEO TD

Heat pump

Unit with protection grille option

Compact and silent

Optimised for heating

High energy efficiency

Winter operation down to -20°C

Hot water production up to +65°C

Heating capacity : 20 to 101 kW

Heating

Hydraulic module

Use

The new generation of **AQUACIAT CALEO** heat pumps offers an optimal solution for all heating applications encountered in the Offices, Healthcare, Hotels, Administration, Shopping Centres and Collective Housing markets.

These units are designed for outdoor installation and require no special protection against adverse weather conditions.

The **AQUACIAT CALEO** uses outdoor air as the sole source of thermal energy for heating during the winter. Connected to high temperature static radiators, an underfloor heating system or comfort units, it produces hot water at +65°C at an outdoor temperature of -10°C which allows existing buildings to be heated with the greatest of ease.

Connected to a domestic hot water (DHW) production system with buffer tank capacity, the **AQUACIAT CALEO** allows for complete autonomy of the domestic hot water and conventional heating system, whilst guaranteeing comfort and considerable energy savings.

The **AQUACIAT CALEO** is optimised to use ozone-friendly HFC R407C refrigerant.

This range guarantees compliance with the most demanding requirements for increased seasonal energy efficiency (SCOP) and CO_2 reduction to comply with the various applicable European directives and regulations.

Range

AQUACIAT CALEO TD series

Heating only version.

83

Description

AQUACIAT CALEO units are packaged machines supplied as standard with the following components:
- Hermetic SCROLL compressors
- Water-cooled condenser, with brazed plates
- Air-cooled evaporator with axial fan motor assembly
  - copper tube coil, aluminium fins
- Electrical power and remote control cabinet:
  - 400V-3ph-50Hz (+/-10%) general power supply + Earth
  - transformer fitted as standard on the machine for supplying the remote control circuit with 24V
- Connect Touch electronic control module
- Hydraulic module with variable speed single pump
- Casing for outdoor installation

The entire AQUACIAT CALEO range complies with the following EC directives and standards:
- Machinery directive 2006/42/EC
- Electromagnetic compatibility directive 2014/30/EC
- EMC immunity and emissions EN 61800-3 'C3'
- Low voltage directive 2014/35/EU
- RoHS 2011/65/EU
- Pressure equipment directive (PED) 2014/68/EU
- Machinery directive EN 60-204 -1
- Refrigerating systems and heat pumps EN 378-2

Designation

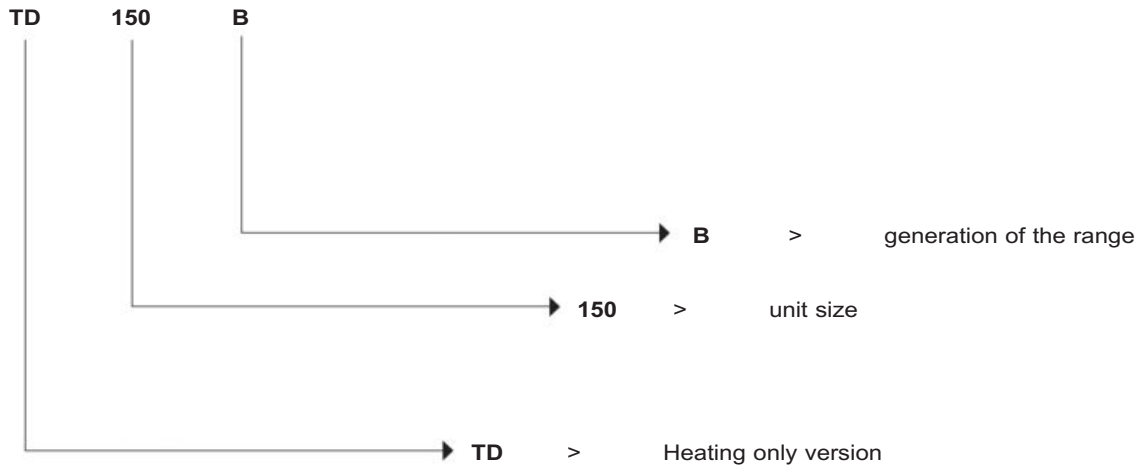

Configuration

TD	Standard
TD LN option	Standard Low Noise
TD XLN Option	Standard Xtra Low Noise

DESCRIPTION OF THE MAIN COMPONENTS

Compressors
- Hermetic SCROLL type
- Electronic motor overheating protection
- Crankcase heater
- Mounted on anti-vibration mounts

Water type heat exchanger
- Brazed-plate exchanger
- Plate patterns optimised for high efficiency
- 19 mm armaflex thermal insulation
- Frost protection with heater

Air-cooled exchanger
- Coil made of grooved copper tubes with high-performance aluminium fins
- propeller fans with composite blades offering an optimised profile
- motors – IP 54, class F

Refrigerant accessories
- Dehumidifier filters
- Hygroscopic sight glasses
- Electronic expansion valves
- Service valves on the liquid line
- Four-way reverse cycle valve for defrosting

Regulation and safety instruments
- Low and high pressure sensors
- Safety valves on refrigerating circuit
- Water temperature control sensors
- Evaporator antifreeze protection sensor
- Factory-fitted evaporator water flow rate controller

Electrical cabinet
- Electrical cabinet with IP 44 protection rating
- A connection point without neutral
- Front-mounted main safety switch with handle
- Control circuit transformer
- 24V control circuit
- Fan and compressor motor circuit breaker
- Fan and compressor motor contactors
- Connect Touch microprocessor-controlled electronic control module
- Wire numbering
- Marking of the main electrical components

Frame
- Frame made from RAL7035 light grey & RAL 7024 graphite grey painted panels.

Connect Touch control module
- User interface with 4.3 inch touchscreen
- Intuitive, user-friendly navigation using icons
- Clear text display of information available in 5 languages (F-GB-D-E-I)
- The electronic control module performs the following main functions:
- Regulation of the water temperature (at the return or at the outlet)

- Regulation of the water temperature based on the outdoor temperature (water law)
- Second setpoint management
- Complete management of compressors with start-up sequence, timer and runtime balancing
- Self-adjusting and proactive functions with adjustment of drift control for parameters
- In-series staged power control system on the compressors according to the thermal requirements
- Management of compressor short-cycle protection
- Frost protection (electric heaters option)
- Phase reversal protection
- Management of occupied/unoccupied modes (according to the time schedule)
- Compressor and pump runtime balancing
- Management of the machine operation limit according to the outdoor temperature
- Sound level reduction device (night mode according to the user programme) with limitation of compressor capacity and fan speed
- Diagnosis of fault and operating statuses
- Management of a fault memory allowing a log of the last 50 incidents to be accessed, with operating readings taken when the fault occurs
- Master/slave management of the two machines in parallel with runtime balancing and automatic changeover if a fault occurs on one machine
- Weekly and hourly time schedule for the machine, including 16 periods of absence
- Pump standby based on demand (energy saving)
- Calculation of water flow rate and operating pressure
- Electronic adjustment of the water pump speed and water flow rate
- Display of all machine parameters (3 access levels, User/Maintenance/Factory, password-protected): temperature, setpoints, pressures, water flow rate, operation time.

AVAILABLE OPTIONS

Remote management

Connect Touch is equipped as standard with an RS485 port and an ETHERNET (IP) connection, offering a range of options for remote management, monitoring and diagnostics. Using the integrated Webserver, a simple internet connection uses the unit's IP address to access the Connect Touch interface on the PC, facilitating everyday management tasks and maintenance operations.
A range of communication protocols are available: MODBUS/JBUS RTU (RS485) or TC/IP as standard, LONWORKS – BACNET IP as an option, enabling most CMS/BMS to be integrated.
Several contacts are available as standard, enabling the machine to be controlled remotely by wired link:
- Automatic operation control: when this contact is open, the machine stops
- Setpoint 1/setpoint 2 selector: when this contact is closed, a second Heating setpoint is activated (unoccupied mode, for example)
- Fault reporting: fault reporting: this contact indicates the presence of a major fault which has caused the machine to stop
- Domestic hot water demand
- On/off control for a boiler
- 4-stage on/off management for additional heaters.

Contacts available as an option:
- Setpoint adjustable via 4-20 mA signal: used to adjust the setpoint

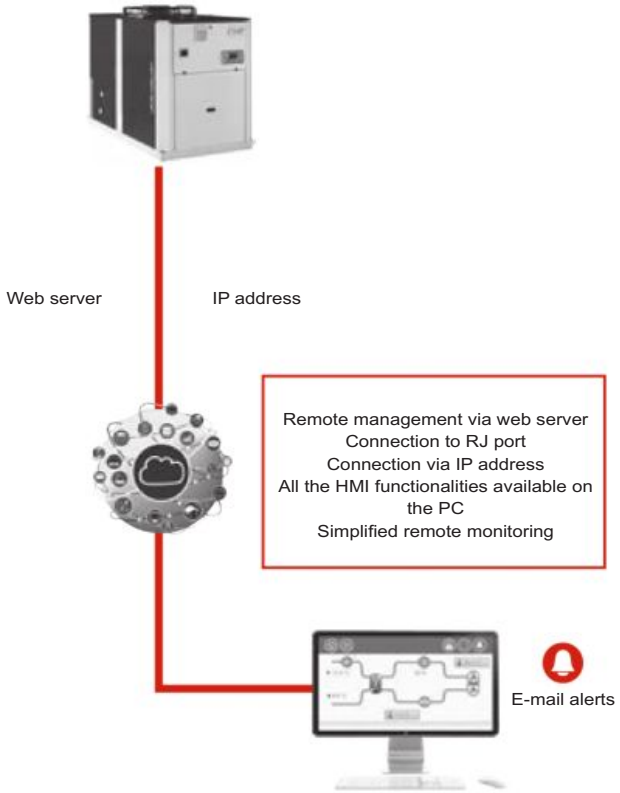

Maintenance

Connect Touch has two maintenance reminder functions as standard, making users aware of the need to regularly perform maintenance operations and to guarantee the service life and performance of the unit. These two functions can be activated independently.
A reminder message appears on the unit's HMI screen, and stays there until it is acknowledged by the maintenance operator. The information and alert relating to these functions are available on the communication bus to be used on the CMS/BMS.

- the scheduled maintenance reminder: when activated, this function enables the period between two maintenance inspections to be set. This period may be set by the operator in either days, months or operating hours, depending on the application.
- the compulsory F-GAS sealing test maintenance reminder: when activated, this function, which is the default factory setting, enables the period between two sealing tests to be selected, according to the refrigerant charge, in compliance with the FGAS regulations

AVAILABLE OPTIONS

Options	Description	Avantages	TD
Corrosion protection, traditional coils	Fins made of pre-treated aluminium (polyurethane and epoxy)	Improved corrosion resistance, recommended for moderate marine and urban environments	•
XtraFan	Fans with 100 Pa maximum available pressure. Each fan equipped with a connection flange & sleeves allowing the connection to the ducting system.	Ducted fan discharge, optimised temperature control, based on the operating conditions and system characteristics	TD 100 to 300
Low Noise	Aesthetic and sound absorbing compressor enclosure	Noise level reduction by 1 to 2 dB(A)	•
Xtra Low Noise	Acoustic compressor enclosure and low-speed fans	Noise emission reduction at reduced fan speed	TD 100 to 300
Soft Starter	Electronic starter on each compressor	Reduced start-up current	•
Hydraulic module frost protection	Electric heater on the hydraulic module	hydraulic module frost protection at low outside temperatures down to -20°C	•
Master/slave operation	Unit equipped with supplementary water outlet temperature sensor kit to be field-installed allowing master/slave operation of two units connected in parallel	Optimised operation of two units connected in parallel operation with operating time equalisation	•
LON gateway	Two-directional communication board complying with Lon Talk protocol	Connects the unit by communication bus to a building management system	•
Bacnet over IP	Two-directional high-speed communication using BACnet protocol over Ethernet network (IP)	Easy and high-speed connection by Ethernet line to a building management system. Allows access to multiple unit parameters	•
Compliance with Russian regulations	EAC certification	Compliance with Russian regulations	•
Condenser screw connection sleeves kit	Condenser inlet/outlet screw connection sleeves	Allows unit connection to a screw connector	•
M2M supervision (accessory)	Monitoring solution which allows customers to track and monitor their equipment remotely in real time	Real-time expert technical support to improve equipment availability and reports at customer hand to monitor and optimize operating equipment.	•
Anti-vibration mounts	Elastomer antivibratils mounts to be place under the unit (Material classified B2 fire class according to DIN 4102).	Isolate unit from the building, avoid transmission of vibration and associate noise to the buiding. Must be used in conjunction with a flexible connection on the water side	•
Condenser flexible sleeves connection	Flexibles connections on the condenser water side	Easy to install. Limits the transmission of vibrations to the water network	•
Set point adjustment by 4-20mA signal	Connections enabling a 4-20 mA signal input	Simplified energy management, enabling the setpoint to be set by a 4-20 mA external signal	•

• ALL MODELS
Refer to the selection tool to find out which options are not compatible.

TECHNICAL CHARACTERISTICS

AQUACIAT CALEO TD				70	80	100	120	150	200	300
Heating										
Standard unit Full load performances*	HA1	Nominal capacity	kW	20,4	25,3	31,8	43,2	51,9	66,8	102
		COP	kW/kW	3,48	3,38	3,36	3,58	3,66	3,43	3,59
	HA2	Nominal capacity	kW	20,5	25,7	32,1	43,7	51,7	64,9	101,9
		COP	kW/kW	4,14	4,05	4,05	4,29	4,34	3,98	4,25
	HA3	Nominal capacity	kW	20,6	24,9	31,5	42,9	52,4	68,1	102
		COP	kW/kW	3	2,92	2,9	3,12	3,17	3	3,13
	HA4	Nominal capacity	kW	20,9	24,5	31,2	42,9	53,5	68,2	103,4
		COP	kW/kW	2,51	2,44	2,42	2,62	2,67	2,53	2,64
Standard unit Seasonal energy efficiency**	HA1	$SCOP_{30/35°C}$	kW/kW	3,68	3,64	3,68	3,64	3,70	3,62	3,72
		ηs heat $_{30/35°C}$	%	144	143	144	143	145	142	146
		P_{rated}	kW	15	19	33	45	56	66	96
	HA3	**$SCOP_{47/55°C}$**	**kW/kW**	**3,04**	**3,06**	**3,06**	**3,08**	**3,14**	**2,99**	**3,18**
		ηs heat $_{47/55°C}$	**%**	**119**	**119**	**119**	**120**	**122**	**117**	**124**
		P_{rated}	kW	14	19	31	44	55	63	94
		Energy labelling		A+	A+	A+	A+	A+	A+	-
Operating weight(1)										
Unit + hydraulic module option			kg	362	418	435	555	579	919	1039
Sound levels										
Standard unit										
Sound power (2)			dB(A)	77	78	83	82	84	84	85
Sound pressure at 10m (3)			dB(A)	46	46	51	51	53	52	53
Unit + Low Noise option										
Sound power (2)			dB(A)	75	76	80	80	80	82	82
Sound pressure at 10m (3)			dB(A)	44	44	49	48	49	50	51
Unit + Xtra Low Noise option										
Sound power (2)			dB(A)	NA	NA	76	76	77	79	79
Sound pressure at 10m (3)			dB(A)	NA	NA	45	45	45	47	47
Dimensions										
Length			mm	1110			1114		2273	
Depth			mm	1327			2100		2100	
Height			mm	1440			1440		1440	
Compressor				Hermetic Scroll 48.3 r/s						
Quantity				1	1	1	1	1	2	2
Number of power stages				1	1	1	1	1	2	2

*	In accordance with standard EN14511-3:2013.
*	In accordance with standard EN14825:2013, average climate.
HA1	Heating mode conditions: Water heat exchanger water entering/leaving temperature 30°C/35°C, outside air temperature tdb/twb = 7°C db/6°C wb, evaporator fouling factor 0 m2. k/W
HA2	Heating mode conditions: Water heat exchanger water entering/leaving temperature 40°C/45°C, outside air temperature tdb/twb = 7°C db/6°C wb, evaporator fouling factor 0 m2. k/W
HA3	Heating mode conditions: Water heat exchanger water entering/leaving temperature 47°C/55°C, outside air temperature tdb/twb = 7°C db/6°C wb, evaporator fouling factor 0 m2. k/W
HA4	Heating mode conditions: Water heat exchanger water entering/leaving temperature 55°C/65°C, outside air temperature tdb/twb = 7°C db/6°C wb, evaporator fouling factor 0 m2. k/W
ηs heat $_{30/35°C}$ & SCOP $_{30/35°C}$	Values calculated in accordance with EN 14825:2016
ηs heat $_{47/55°C}$ & $SCOP_{47/55°C}$	**Values in bold comply with Ecodesign Regulation (EU) No. 813/2013 for heating application**
-	Not applicable
(1)	Weight given as a guide. Please refer to the unit nameplate.
(2)	In dB ref=10-12 W, 'A' weighted. Declared dual-number noise emission values in accordance with ISO 4871 with an associated uncertainty of +/-2dB(A). Measured in accordance with ISO 9614-1 and certified by Eurovent.
(3)	In dB ref 20 µPa, 'A' weighted. Declared dual-number noise emission values in accordance with ISO 4871 with an associated uncertainty of +/-2dB(A). For information, calculated from the sound power Lw(A).

EUROVENT CERTIFIED PERFORMANCE
www.eurovent-certification.com

Eurovent certified values

TECHNICAL CHARACTERISTICS

AQUACIAT CALEO TD		70	80	100	120	150	200	300
Refrigerant		R407C						
Charge	kg	8	8,8	9,7	10	13,2	22	26,5
	tCO_2eq	14,2	15,6	17,2	17,7	23,4	39,0	47,0
Oil		POE - EMKARATE RL32-3 MAF						
Charge	l	1,9	4,1	4,1	4,1	4,1	8,2	8,2
Control		Connect Touch						
Minimum capacity	%	100	100	100	100	100	50	50
Condenser		Direct expansion, plate heat exchanger						
Water volume	l	4,9	6,4	8,2	9,6	12,1	16,4	22,7
Max. water-side operating pressure with hydraulic module	kPa	400	400	400	400	400	400	400
Fan		Axial with rotating impeller. Flying-Bird 4						
Quantity	1	1	1	1	1	2	2	2
Total air flow (high speed)	l/s	3770	3748	3736	4035	4036	7479	8072
Standard rotation speed	r/s	12	12	12	12	12	12	12
Rotation speed with Xtrafan	r/s	-	-	16	16	16	16	16
Evaporator		Grooved copper tube and aluminium fins						
Hydraulic module								
Variable speed pump		Pump. victaulic screen filter. valve. purge valves (water and air). cavitation pressure sensor						
Water connections		Victaulic						
Connections	inch	1” 1/4	1” 1/4	1" 1/2	1” 1/2	1” 1/2	2”	2”
External diameter	mm	42,4	42,4	48,3	48,3	48,3	60,3	60,3
Chassis paint colour		Colour code RAL 7035 and RAL7024						

89

ELECTRICAL SPECIFICATIONS

AQUACIAT CALEO TD		70	80	100	120	150	200	300
Power circuit								
Nominal voltage	V-ph-Hz	400-3-50						
Voltage range	V	360-440						
Control circuit supply		24 V via internal transformer						
Maximum start-up current (Un)(1)								
Standard unit	A	104	102	130	172	203	158	243
Unit with soft starter option	A	56	54	69	92	103	97	144
Unit power factor at maximum capacity(2)		0,82	0,82	0,83	0,87	0,87	0,83	0,87
Max. operating input power(2)	kW	10	12	16	21	25	32	48
Nominal unit current draw(3)	A	14	16	20	25	30	42	57
Maximum unit current draw (Un)(4)	A	17	21	27	35	41	56	79
Max. current draw (Un-10%)(5)	A	18	22	29	38	45	60	86

(1) Maximum instantaneous starting current (maximum operating current of the smallest compressor + fan current + locked rotor current of the largest compressor).
(2) Input power, compressors + fans, at the unit operating limits (saturated suction temperature: 10°C, saturated condensing temperature: 65°C) and nominal voltage of 400 V (data given on the unit nameplate).
(3) Standardised EUROVENT conditions: condenser entering/leaving water temperature = 40/45°C, outside air temperature db/wb = 7°C/6°C.
(4) Maximum unit operating current at maximum unit input power and 400 V (values given on the unit's nameplate).
(5) Maximum unit operating current at maximum unit input power and 360 V.

Short circuit current withstand capability (TN system(1))

AQUACIAT CALEO TD - Standard unit (disconnect switch)		70	80	100	120	150	200	300
Value without upstream protection								
Short time (1s) assigned current (Icw)	kA rms	0,6	0,6	0,6	1,26	1,26	1,26	2
Allowable peak assigned current (Ipk)	kA pk	4,5	4,5	4,5	6	6	6	10
value with upstream protection by circuit breaker								
Conditional short circuit assigned current (Icc)	kA rms	5,4	7	7	7,7	7,7	6,1	10
Circuit breaker - Compact range type		32	40	40	50	63	80	100
Reference number (2)		5SY6332-7	5SY6340-7	5SY6340-7	5SY4350-7	5SY4363-8	5SP4380-7	5SP4391-7
Value with upstream protection by fuses								
Conditional short circuit assigned current (Icc)	kA rms	17	50	50	50	50	14,5	22
Fuse (gL/gG)		40	40	40	63	63	80	125

(1) Type of system earthing
(2) If another current limitation protection system is used, its time-current and thermal constraints (I^2t) trip characteristics must be at least equivalent to those of the recommended circuit breaker.
The short circuit current stability values given above are for the TN system.

DIMENSIONS

AQUACIAT CALEO TD 70 to 100

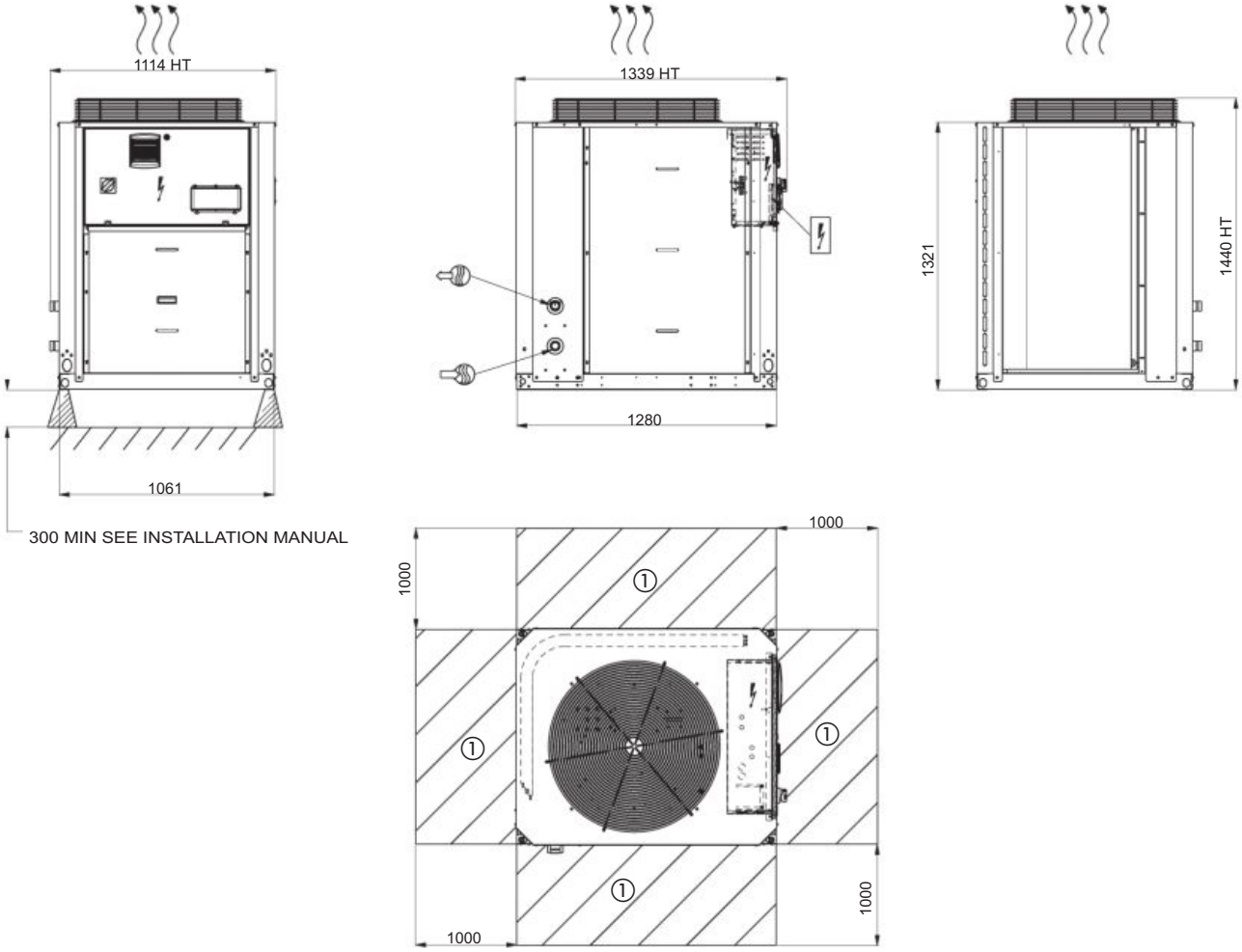

Key
Dimensions en mm

- (1) Clearance required for maintenance and air flow
- Water inlet
- Water outlet
- Air outlet, do not obstruct
- Electrical cabinet

NOTES :

Non-contractual drawings.

When designing a system, refer to the certified dimensional drawings provided with the unit or available on request.

Please refer to the certified dimensional drawings for the positioning of the fixing points, weight distribution points and centre of gravity coordinates.

DIMENSIONS

AQUACIAT CALEO TD 120 to 150

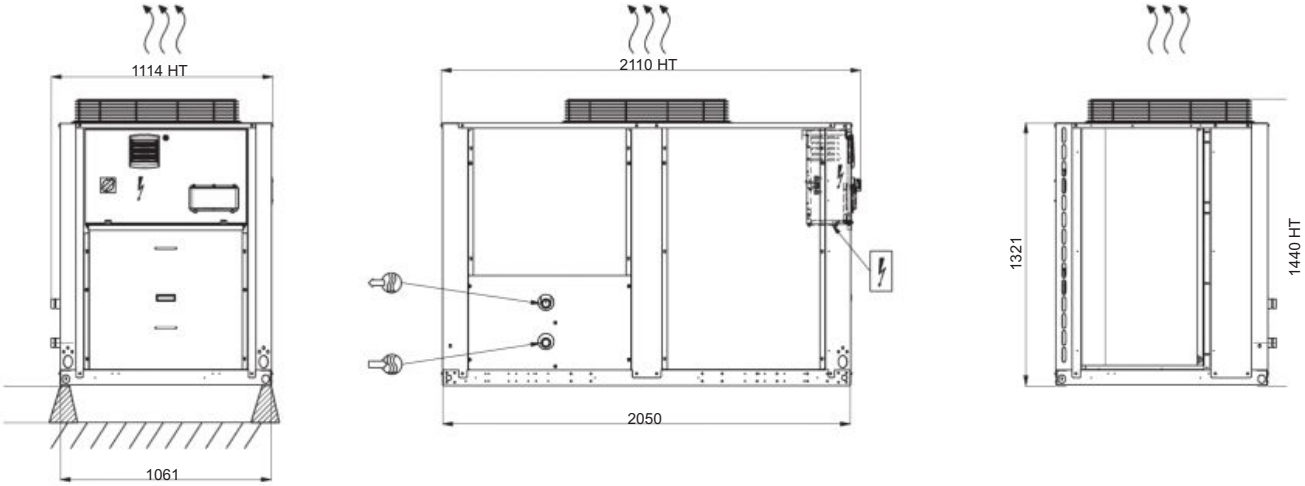

300 MIN SEE INSTALLATION MANUAL

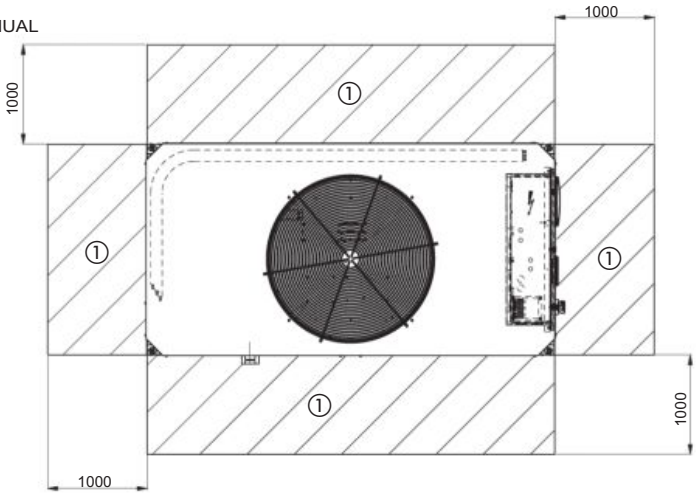

Key
Dimensions en mm

- (1) Clearance required for maintenance and air flow
- Water inlet
- Water outlet
- Air outlet, do not obstruct
- Electrical cabinet

NOTES :

Non-contractual drawings.

When designing a system, refer to the certified dimensional drawings provided with the unit or available on request.

Please refer to the certified dimensional drawings for the positioning of the fixing points, weight distribution points and centre of gravity coordinates.

DIMENSIONS

AQUACIAT CALEO TD 200 to 300

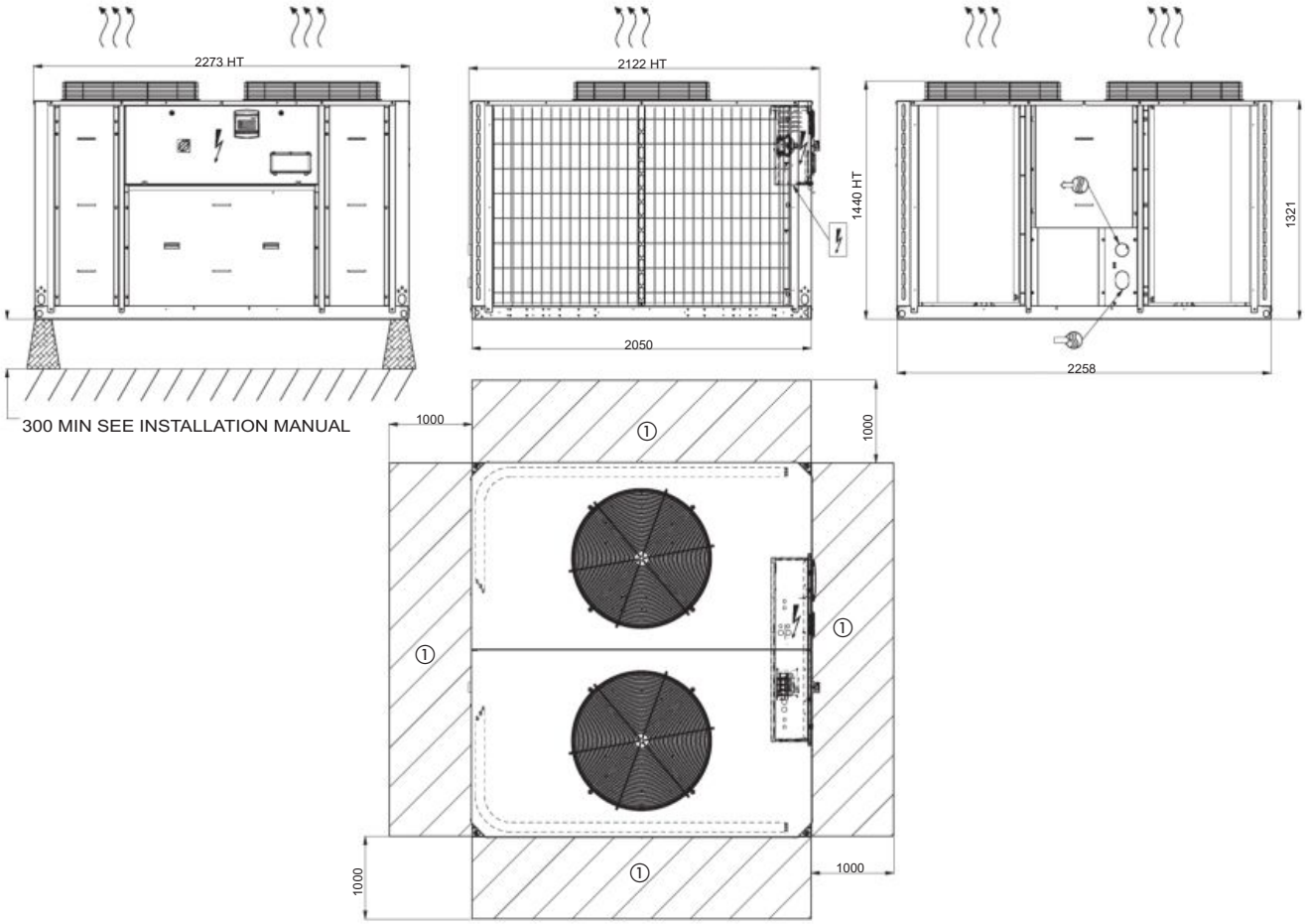

Key
Dimensions en mm

- ① Clearance required for maintenance and air flow
- Water inlet
- Water outlet
- Air outlet, do not obstruct
- Electrical cabinet

NOTES :

Non-contractual drawings.

When designing a system, refer to the certified dimensional drawings provided with the unit or available on request.

Please refer to the certified dimensional drawings for the positioning of the fixing points, weight distribution points and centre of gravity coordinates..

DIMENSIONS

■ AQUACIAT CALEO TD 100 XTRA fan option

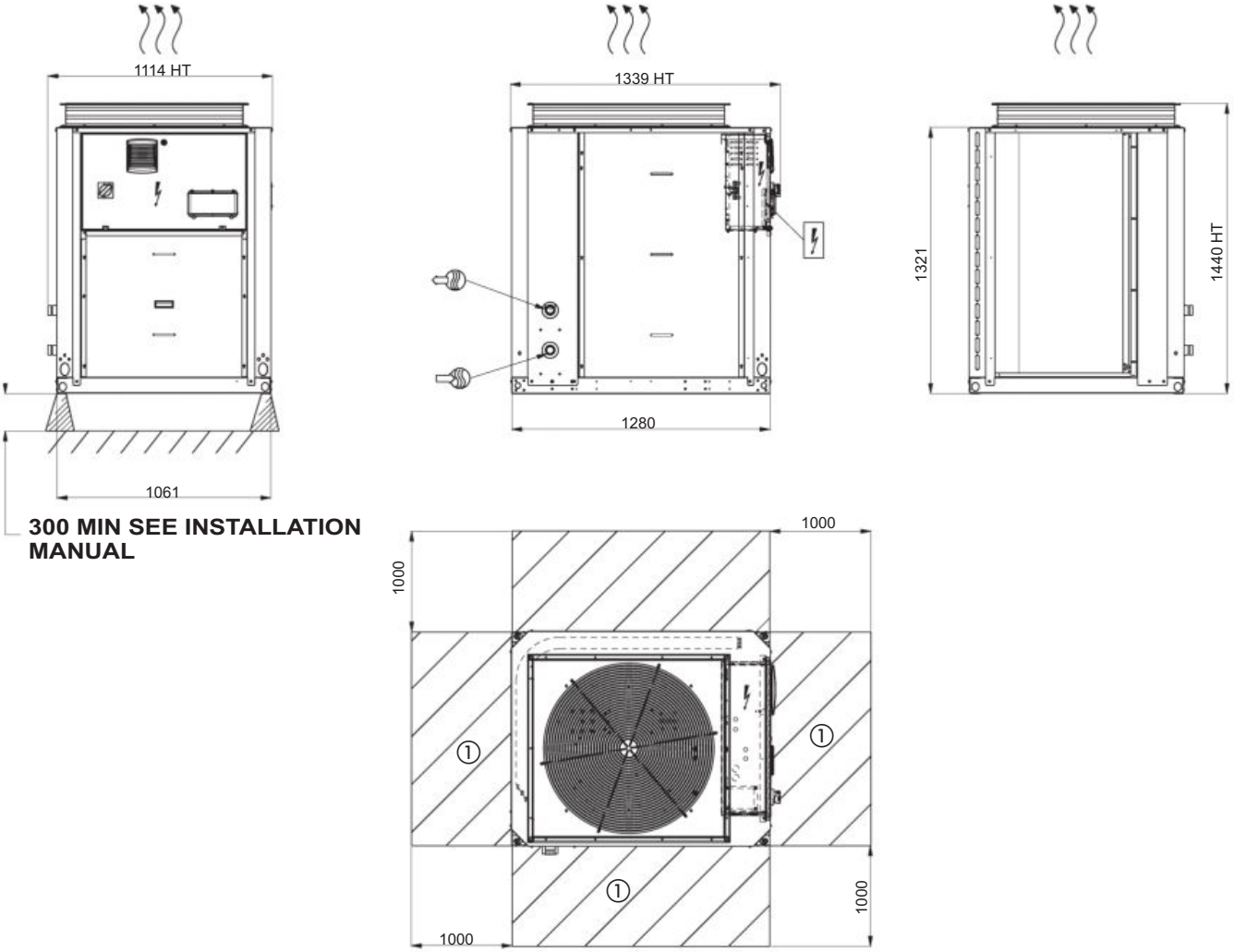

Key
Dimensions en mm

- (1) Clearance required for maintenance and air flow
- Water inlet
- Water outlet
- Air outlet, do not obstruct
- Electrical cabinet

NOTES :

Non-contractual drawings.

When designing a system, refer to the certified dimensional drawings provided with the unit or available on request.

Please refer to the certified dimensional drawings for the positioning of the fixing points, weight distribution points and centre of gravity coordinates.

DIMENSIONS

AQUACIAT CALEO TD 120 - 150 XTRA fan option

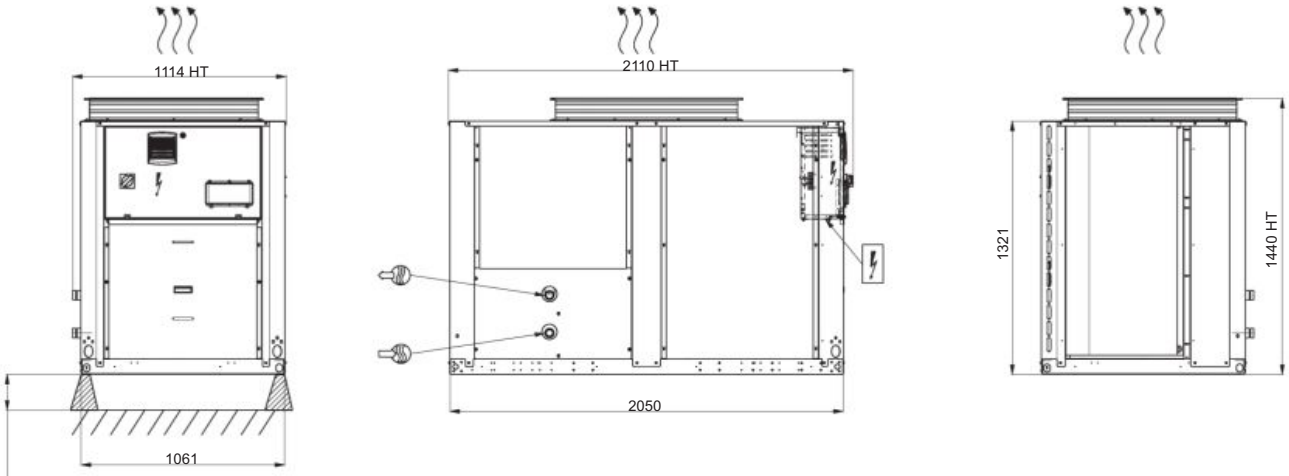

300 MIN SEE INSTALLATION MANUAL

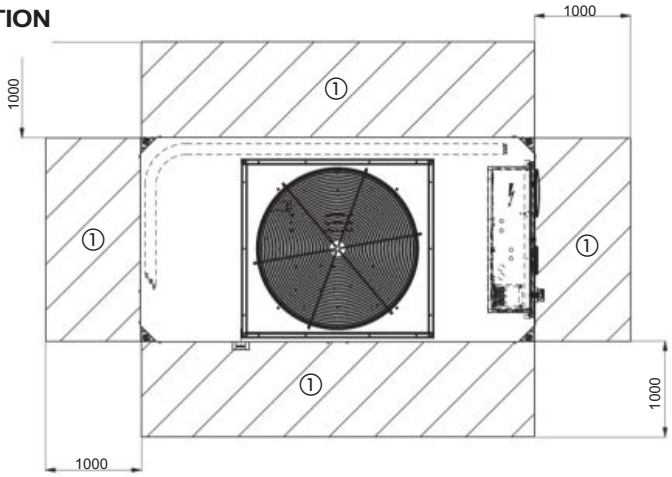

Key
Dimensions en mm

- (1) Clearance required for maintenance and air flow
- Water inlet
- Water outlet
- Air outlet, do not obstruct
- Electrical cabinet

NOTES :

Non-contractual drawings.

When designing a system, refer to the certified dimensional drawings provided with the unit or available on request.

Please refer to the certified dimensional drawings for the positioning of the fixing points, weight distribution points and centre of gravity coordinates.

DIMENSIONS

■ AQUACIAT CALEO TD 200 - 300 XTRA fan option

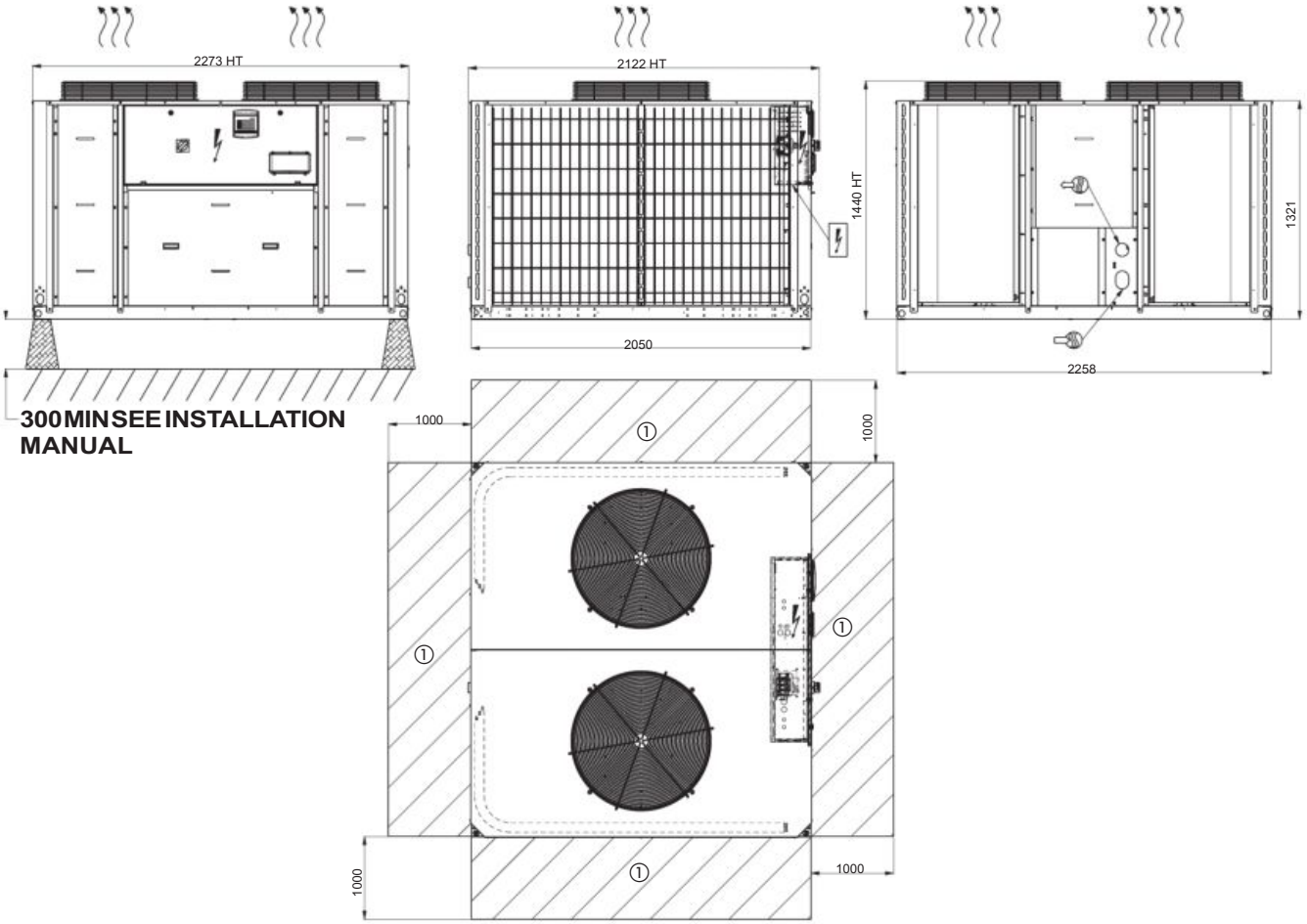

Key
Dimensions en mm

- ① Clearance required for maintenance and air flow
- Water inlet
- Water outlet
- Air outlet, do not obstruct
- Electrical cabinet

NOTES :

Non-contractual drawings.

When designing a system, refer to the certified dimensional drawings provided with the unit or available on request.

Please refer to the certified dimensional drawings for the positioning of the fixing points, weight distribution points and centre of gravity coordinates.

AQUACIAT POWER LD

Water chillers

Energy excellence

Compact and silent

Scroll compressors

Shell and tube or brazed plate heat exchangers

All-aluminium micro-channel condenser

Self-adjusting electronic control

Cooling capacity: 168 to 736 kW

Cooling only | **Hydraulic module** | **Heat recovery**

EUROVENT CERTIFIED PERFORMANCE www.eurovent-certification.com

Use

The new generation of **AQUACIAT POWER** high efficiency air-to-water water chillers offers an optimal solution for all cooling applications used for the Office, Healthcare, Industry, Administration, Retail and Collective housing sectors.

These units are designed for outdoor installation and require no special protection against adverse weather conditions.

The **AQUACIAT POWER** is optimised to use ozone-friendly HFC R410A refrigerant.

This range guarantees compliance with the most demanding requirements for increased seasonal energy efficiency (SEER and SEPR) and CO_2 reduction to comply with the various applicable European directives and regulations.

Range

AQUACIAT POWER LD ST series

Standard cooling only version.

The product is optimised to meet the most demanding technical and economic requirements.

AQUACIAT POWER LD HE series

Cooling only high seasonal energy efficiency version.

The product is optimised for part load applications for which an optimum SEER and SEPR value is required. In this case, the machine is equipped as standard with variable-speed EC fans (sizes 602 to 2000) or AC fans and external speed regulator (sizes 2100 to 2800), allowing for optimisation of the part load efficiency throughout the year.

DESCRIPTION

AQUACIAT POWER units are packaged machines supplied as standard with the following components:

- Hermetic SCROLL compressors
- Chilled-water evaporator, either:
  - brazed plate (sizes 602 to 2000)
  - shell and tube dry expansion (sizes 2100 to 2800)
- Air-cooled exchanger, all-aluminium micro-channel coil with axial fan motor assembly
- Electrical power and remote control cabinet:
  - 400V-3ph-50Hz (+/-10%) general power supply + Earth
  - transformer fitted as standard on the machine for supplying the remote control circuit with 24V
- Connect Touch (sizes 602 to 2000) or Connect 3 (sizes 2100 to 2800) electronic control module.
- Casing for outdoor installation.

The entire AQUACIAT POWER range complies with the following EC directives and standards:

- Machinery directive 2006/42/EC
- Electromagnetic compatibility directive 2014/30/EC
- EMC immunity and emissions EN 61800-3 "C3"
- Low voltage directive 2014/35/EU
- RoHS 2011/65/EU
- Pressure equipment directive (PED) 2014/68/EU
- Machinery directive EN 60-204 - 1
- Refrigeration systems and heat pumps EN 378-2
- Commission Regulation (EU) No. 2016/2281 implementing directive 2009/125/EC setting the ecodesign requirements.

DESCRIPTION

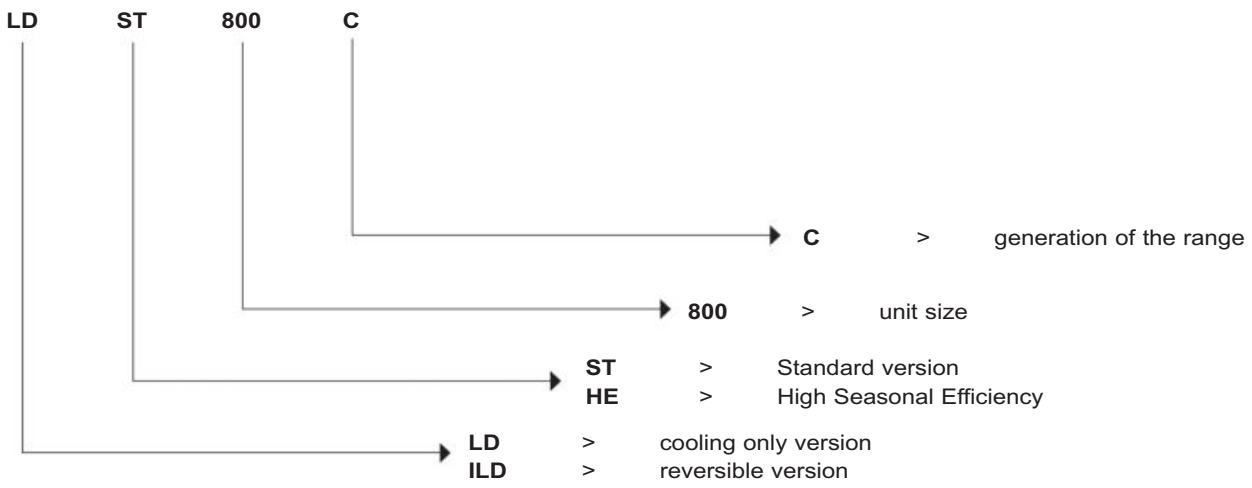

CONFIGURATION

ST	Standard	**HE**	High Seasonal Efficiency
ST LN option	Standard Low Noise	**HE LN option**	High Seasonal Efficiency Low Noise
ST XLN option	Standard Xtra Low Noise	**HE XLN option**	High Seasonal Efficiency Xtra Low Noise

Description of the main components

Compressors

- Hermetic SCROLL type
- Electronic motor overheating protection
- Crankcase heater
- Mounted on anti-vibration mounts

Evaporator

- Exchanger type:
  - asymmetrical brazed plate (sizes 602 to 2000)
  - shell and tube dry expansion (sizes 2100 to 2800)
- Plate patterns optimised for high efficiency
- 19 mm armaflex thermal insulation

Condenser

- Air-cooled exchanger, all-aluminium micro-channel coil
- Axial fans with composite blades offering an optimised profile, fixed speed (ST version) or variable speed (HE version)
- Motors – IP 54, class F

Refrigerant accessories

- Dehumidifier filters with rechargeable cartridges
- Hygroscopic sight glasses
- Electronic expansion valves
- Service valves on the liquid line

Regulation and safety instruments

- Low and high pressure sensors
- Safety valves on the refrigerant circuit
- Water temperature control sensors
- Evaporator antifreeze protection sensor
- Factory-fitted evaporator water flow controller

Electrical cabinet

- Electrical cabinet with IP 44 protection rating
- A connection point without neutral
- Front-mounted main safety switch with handle
- Control circuit transformer
- 24V control circuit
- Fan and compressor motor circuit breaker
- Fan and compressor motor contactors
- Connect Touch microprocessor-controlled electronic control module
- Wire numbering
- Marking of the main electrical components

Casing

Frame made from RAL 7035 light grey & RAL 7024 graphite grey painted panels

Connect Touch control module (sizes 602 to 2000)

- User interface with 4.3 inch touch screen
- Intuitive, user-friendly navigation using icons
- Clear text display of information available in 8 languages (F-GB-D-NL-E-I-P - Chinese + free)

The electronic control module performs the following main functions:

- Regulation of the chilled water temperature (at the return or at the outlet)
- Regulation of the water temperature based on the outdoor temperature (water law)
- Regulation for low temperature energy storage
- Second setpoint management
- Complete management of compressors with start-up sequence, timer and runtime balancing
- Self-regulating and proactive functions with adjustment of the control based on parameter drift
- In-series staged power control system on the compressors according to the thermal requirements
- Management of compressor short-cycle protection
- Frost protection (exchanger heater option)
- Phase reversal protection
- Management of occupied/unoccupied modes (according to the time schedule)
- Compressor and pump runtime balancing
- Management of the machine operation limit according to the outdoor temperature
- Sound level reduction device (night mode according to the user programme) with limitation of compressor capacity and fan speed
- Diagnosis of fault and operating statuses
- Management of a fault memory allowing a log of the last 50 incidents to be accessed, with operating readings taken when the fault occurs
- Blackbox memory
- Master/slave management of the two machines in parallel with runtime balancing and automatic changeover if a fault occurs on one machine
- Weekly and hourly time schedule for the machine, including 16 periods of absence
- Pump standby based on demand (energy saving)
- Calculation of the water flow rate and operating pressure (hydraulic module version)
- Electronic adjustment of the water pump speed and water flow rate (variable speed pump option)
- Display of all machine parameters (3 access levels, User/Maintenance/Factory, password-protected): temperature, setpoints, pressures, water flow rate (hydraulic version), runtime.
- Display of trend curves for the main values
- Storage of maintenance manual, wiring diagram and spare parts list.
- Innovative smart energy monitoring, providing users with smart data such as real-time electric energy consumption and heating and cooling capacity, and instantaneous and average energy efficiency rates.

Connect Touch remote management

Connect Touch is equipped as standard with an RS485 port and an ETHERNET (IP) connection, offering a range of options for remote management, monitoring and diagnostics.

Using the integrated Webserver, a simple internet connection uses the unit's IP address to access the Connect Touch interface on the PC, facilitating everyday management tasks and maintenance operations.

A range of communication protocols are available: MODBUS/JBUS RTU (RS485) or TC/IP as standard, LONWORKS – BACNET IP as an option, enabling most CMS/BMS to be integrated

Several contacts are available as standard, enabling the machine to be controlled remotely by wired link:

- Automatic operation control: when this contact is open, the machine stops
- Setpoint 1/setpoint 2 selector: when this contact is closed, a second cooling setpoint is activated (energy storage or unoccupied mode, for example)
- Power limitation: closing the contact concerned allows the power or refrigerating consumption of the machine to be limited by stopping one or more compressors (this limit can be set with a parameter)
- Fault reporting: this contact indicates the presence of a major fault which has caused one or both refrigerant circuits to stop
- Operational status reporting: indicates that the unit is in production mode
- Activation control for partial energy recovery using the desuperheater
- Switch control for the customer pump, external to the machine (on/off).

Contacts available as an option:

- Setpoint adjustable via 4-20 mA signal: this input is used to adjust the setpoint in COOLING mode
- Power limitation adjustable by 4-20 mA signal
- Second power limitation level
- Power indication: analogue output (0-10 V) providing an indication of the unit's load rate
- User fault reporting: enables integration of a fault in the water loop
- General fault reporting: this contact indicates that the unit has stopped completely
- Alert reporting: this contact indicates the presence of a minor fault which did not cause the circuit in question to stop
- End of storage signal: enables return to the second setpoint at the end of the storage cycle
- Schedule override: closing this contact cancels the time schedule
- Desuperheater activation control
- Desuperheater pump On/Off control

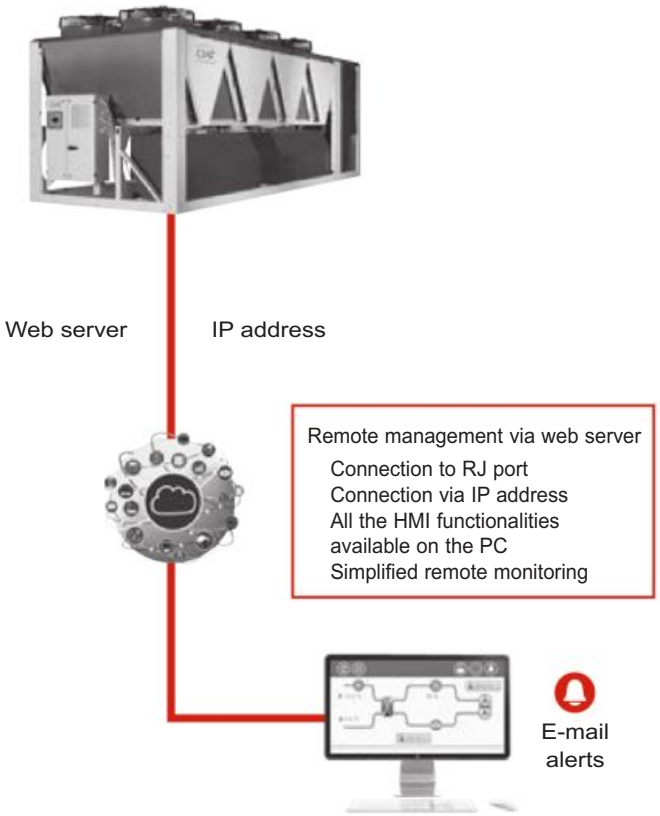

Connect 3 control module (sizes 2100 to 2800)

2- and 4-digit display, giving the number and description for the selected parameter

Direct access to the word sequences and the value for each parameter 3 password-protected access levels (User, Maintenance, Factory)

4 languages included (F-GB-E-P)

Display of all information (pressure - temperature - runtime, etc.)

Electronic control module, performing the following main functions:

Water temperature control (at exchanger return or outlet)

Setpoint can be changed according to the outdoor temperature. (energy-saving feature)

Remote control dual setpoint

Condensing pressure control

Compressor and pump runtime balancing and metering

Management of number of compressor start-ups

Management of short-cycle protection

Master/Slave management (2 units)

Fault memory management

Frost protection (exchanger heater option)

Phase reversal protection

Management of occupied/unoccupied modes (according to the time schedule)

Log of the last 20 weekly and hourly default time schedules for the machine, including 16 periods of absence

Connect 3 remote management

Connect 3 is equipped as standard with an RS485 port offering a range of remote management, monitoring and diagnostic options.

A range of communication protocols are available: MODBUS/JBUS RTU (RS485) as standard, LONWORKS – BACNET IP as an option, enabling most CMS/BMS to be integrated

Several contacts are available as standard, enabling the machine to be controlled remotely by wired link:

- Automatic operation control: when this contact is open, the machine stops
- Setpoint 1/setpoint 2 selector: when this contact is closed, a second cooling setpoint is activated (unoccupied mode, for example)
- Power limitation: closing this contact allows the power or refrigerating consumption of the machine to be limited by stopping one or more compressors (this limit can be set with a parameter)
- General fault reporting: this contact indicates that the unit has stopped completely
- Fault reporting: this contact indicates the presence of a major fault which has caused one or both refrigerating circuits to stop
- Alert reporting: this contact indicates the presence of a minor fault which did not cause the circuit in question to stop
- User fault reporting: enables integration of a fault in the water loop
- Operational status reporting: indicates that the unit is in production mode
- Activation control for partial energy recovery using the desuperheater
- Desuperheater pump On/Off control
- 0-10V output for controlling an external variable speed pump.

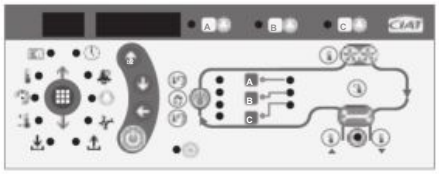

Maintenance

Connect Touch and Connect 3 have two maintenance reminder functions as standard, making users aware of the need to regularly perform maintenance operations and to guarantee the service life and performance of the unit. These two functions can be activated independently.

A reminder message appears on the unit's HMI screen, and stays there until it is acknowledged by the maintenance operator. The information and alert relating to these functions are available on the communication bus to be used on the CMS/BMS.

- The scheduled maintenance reminder: when activated, this function enables the period between two maintenance inspections to be set. This period may be set by the operator in either days, months or hours of operation, depending on the application.
- The compulsory F-GAS sealing test maintenance reminder: when activated, this function, which is the default factory setting, enables the period between two sealing tests to be selected, according to the refrigerant charge, in compliance with the F-GAS regulations.

AVAILABLE OPTIONS

Options	Description	Advantages	LD ST / HE 602-2000	LD HE 2100-2800
Medium temperature brine solution	Low temperature chilled water production down to 0 °C with ethylene glycol and propylene glycol.	Covers specific applications such as ice storage and industrial processes	●	No
Low temperature brine solution	Low temperature chilled water production down to -15 °C with ethylene glycol and -12 °C with propylene glycol.	Covers specific applications such as ice storage and industrial processes	602 to 1500	No
XtraFan	Unit equipped with specifics variable-speed fans : XtraFans (See specific chapter for maximum available static pressure according to size), each fan equipped with a connection flange & sleeves allowing the connection to the ducting system.	Ducted fan discharge, optimised temperature control, based on the operating conditions and system characteristics	All HE version	No
Low Noise	Aesthetic and sound absorbing compressor enclosure	Noise level reduction	●	●
Xtra Low Noise	Aesthetic and sound absorbing compressor enclosure associated with low-speed fans	Noise emission reduction at reduced fan speed	●	●
IP54 control box	Increased leak tightness of the unit	Protects the inside of the electrics box from dust, water and sand. In general this option is recommended for installations in polluted environments	●	No
Protection grilles	Metal grilles on the 4 unit sides.	Improves protection against intrusion to the unit interior, coil and piping protection against impacts.	●	●
Soft Starter	Electronic starter on each compressor	Reduced start-up current	●	No
EC fans for winter operation cooling mode down to -20 °C	EC fan control via integrated Electronic Commutated motors One EC fan on each refrigerant circuit	Stable unit operation when the air temperature is between 0 °C and -20 °C.	ALL ST version	No
Water exchanger frost protection	Electric heater on the water exchanger and the water piping	Water exchanger module frost protection between 0 °C and -20 °C outside air temperature	●	●
Exchanger and hydraulic module frost protection	Electric heater on the water exchanger hydraulic module and optional expansion tank	Water type heat exchanger and hydraulic module frost protection down to an outdoor air temperature of -20 °C	ALL units with pump option	No
Exchanger and hydraulic module frost protection	Electric heater on the water exchanger hydraulic module and optional expansion tank & water buffer tank	Water type heat exchanger and hydraulic module frost protection down to an outdoor air temperature of -20 °C	ALL with water buffer tank	No
Partial heat recovery	Unit equipped with one desuperheater on each refrigerant circuit	Production of free high-temperature hot-water simultaneously with chilled water production (or hot water for heat pump)	●	●
Master/slave operation	Unit equipped with supplementary water outlet temperature sensor kit (to be field installed) allowing master/slave operation of two units connected in parallel	Optimised operation of two units connected in parallel operation with runtime balancing	●	●
Shell and tube evaporator aluminium insulation	Evaporator covered with an aluminium jacket for thermal insulation protection	Improved resistance to aggressive climate conditions	602 to 1000	●
Compressor suction valve	Valve set for the compressor suction side to isolate it in the refrigerant circuit	Simplified service and maintenance	No	●
Compressor suction and discharge valves	Shut-off valves on the compressor suction and discharge piping	Simplified maintenance. Possibility to store the refrigerant charge in the cooler or condenser side during servicing	●	No
Compressor discharge valves	Shut-off valves on the compressor discharge piping	Simplified maintenance. Possibility to store the refrigerant charge in the condenser side during servicing	●	No
HP single-pump hydraulic module	Single high-pressure water pump, water filter, electronic water flow control, pressure transducers. For more details, refer to the dedicated chapter (expansion tank not included). Option with built-in safety hydraulic components available.)	Easy and fast installation (plug & play)	●	No
HP dual-pump hydraulic module	Dual high-pressure water pump, water filter, electronic water flow control, pressure transducers. For more details, refer to the dedicated chapter (expansion vessel not included; option with built-in safety hydraulic components available)	Easy and fast installation (plug & play)	●	No

● ALL MODELS

Refer to the selection tool to find out which options are not compatible.

102

AVAILABLE OPTIONS

Options	Description	Advantages	LD ST / HE 602-2000	LD HE 2100-2800
LP single-pump hydraulic module	Single low-pressure water pump, water filter, electronic water flow control, pressure transducers. For more details, refer to the dedicated chapter (expansion tank not included; option with built-in hydraulic safety components available)	Easy and fast installation (plug & play)	●	No
LP dual-pump hydraulic module	Dual low-pressure water pump, water filter, electronic water flow control, pressure transducers. For more details, refer to the dedicated chapter (expansion tank not included; option with built-in hydraulic safety components available)	Easy and fast installation (plug & play)	●	No
HP evap. variable-speed single-pump	Single high-pressure water pump with variable speed drive (VSD), water filter, electronic water flow control, pressure transducers. Multiple water flow control options. For more details, refer to the dedicated chapter (expansion tank not included; option with built-in hydraulic safety components available)	Quick and easy installation (plug & play), significant pumping energy cost savings (more than two-thirds), tighter water flow control, improved system reliability	●	No
HP variable-speed dual pump.	Dual high-pressure water pump with variable speed drive (VSD), pressure transducers. Multiple water flow control options. For more details, refer to the dedicated chapter (expansion tank not included; option with built-in hydraulic safety components available)	Quick and easy installation (plug & play), significant pumping energy cost savings (more than two-thirds), tighter water flow control, improved system reliability	●	No
BacNet gateway	Bi-directional communication board complying with BacNet protocol	Easy connection by communication bus to a building management system	No	●
Lon gateway	Bi-directional communication board complying with Lon Talk protocol	Connects the unit by communication bus to a building management system	●	●
BACnet/IP	Bi-directional high-speed communication using BACnet protocol over Ethernet network (IP)	Easy and high-speed connection by ethernet line to a building management system. Allows access to multiple unit parameters	●	No
Energy Management Module	Control board with additional inputs/outputs. See Contacts available in option on control description.	Extended remote control capabilities (setpoint reset by 0-20 mA input, ice storage end, demand limits, boiler on/off command...)	●	●
Contact for refrigerant leak detection	0-10 V signal to report any refrigerant leakage directly on the unit (the leak detector must be supplied by the customer)	Immediate customer notification of refrigerant losses to the atmosphere, allowing timely corrective actions	●	●
Dual relief valves on 3-way valve	Three-way valve upstream of relief valves on the shell and tube evaporator	Valve replacement and inspection facilitated without refrigerant loss. Conforms to European standard EN378/BGVD4	602 to 1000	●
Compliance with Russian regulations	EAC certification	Compliance with Russian regulations	●	●
Compliance with Australian regulations	Unit approved to Australian code	Compliance with Australian regulations	No	●
Power factor correction	Capacitors for automatic regulation of power factor (cos phi) value to 0,95.	Reduction of the apparent electrical power, compliance with minimum power factor limit set by utilities	●	No
MCHE anti-corosion protection Protect2	Coating by conversion process which modifies the surface of the aluminium producing a coating that is integral to the coil. Complete immersion in a bath to ensure 100% coverage. No heat transfer variation, tested 4000 hours salt spray per ASTM B117	Protect2 Improved corrosion resistance of the MCHE coils by 2, recommended for use in moderately corrosive environments	●	●
MCHE anti-corosion protection Protect4	Flexible, durable polyepoxide coating applied using an electro coating process to give micro-channel coils an anti-UV top layer. Minimal variation in the thermal transfer, tested to withstand more than 6000 hours of constant neutral salt spray as per ASTM B117, improved impact resistance as per ASTM D2794	Protect4 Improved corrosion resistance of the MCHE coils by 4, recommended for use in corrosive environments	●	●
Shell and tubes heat exchanger	Brazed plate heat exchanger replaced by shell & tube heat exchanger	Extended water flow range, reinforced fouling resistance	602 to 1000	No
230V electrical plug	230V AC power supply source provided with plug socket and transformer (180 VA, 0.8 Amps)	Permits connection of a laptop or an electrical device during unit commissioning or servicing	●	●
Expansion vessel	6 bar expansion tank integrated in the hydraulic module (requires hydraulic module option)	Easy and fast installation (plug & play), & protection of closed water systems from excessive pressure	ALL units with pump option	No
Screwed water connection sleeve kit for DSH	DSH connections with screw connection sleeves	Easy installation. Used to connect the unit to a screw connector	●	No

● ALL MODELS

Refer to the selection tool to find out which options are not compatible.

AVAILABLE OPTIONS

Options	Description	Advantages	LD ST / HE 602-2000	LD HE 2100-2800
M2M supervision (accessory)	Monitoring solution which allows customers to track and monitor their equipment remotely in real time	Real-time expert technical support to improve equipment availability and reports at customer hand to monitor and optimize operating equipment.	●	No
Water buffer tank module	Integrate water buffer tank	Avoid short cycle on compressors and ensure a stable water in the loop	ALL units with pump option	No
Anti-vibration mounts (kit)	Elastomer antivibratils mounts to be place under the unit (Material classified B2 fire class according to DIN 4102).	Isolate the unit from the building, avoid transmission of vibration and associate noise to the building. Must be associated with a flexible connection on water side	●	No
Exchangers flexibles connection (kit)	Flexibles connections on the exchanger water side	Easy installation. Limit transmission of vibrations on the water network	●	No
Exchangers water filter (kit)	Water filter	Eliminate dust in the water network	ALL units without pump option	No
Set point adjustment by 4-20mA signal	Connections to allow a 4-20mA signal input	Easy energy management, allow to adjust set point by a 4-20mA external signal	●	No
Free Cooling dry cooler management	Control & connections to a Free Cooling Drycooler Opera or Vextra fitted with option FC control box	Easy system managment, Extended control capabilities to a drycooler used in Free Cooling mode	●	No
Evap. single pump power/control circuit	Unit equipped with an electrical power and control circuit for one pump evaporator side	Quick and easy installation: the control of fixed speed pumps is embedded in the unit control	●	No
Evap. dual pumps power/control circuit	Unit equipped with an electrical power and control circuit for two pumps evaporator side	Quick and easy installation: the control of fixed speed pumps is embedded in the unit control	●	No

● ALL MODELS

Refer to the selection tool to find out which options are not compatible.

TECHNICAL CHARACTERISTICS

AQUACIAT POWER LD ST				602	650	750	800	1000	1100	1250	1350	1500	1600	1750	2000
Cooling															
Standard unit Full load performances*	CA1	Nominal capacity	kW	168	181	198	216	261	300	331	365	397	430	464	523
		EER	kW/kW	3,04	3,12	2,98	2,97	2,90	2,97	2,92	2,95	2,90	2,94	2,90	2,90
		Eurovent class		B	A	B	B	B	B	B	B	B	B	B	B
	CA2	Nominal capacity	kW	216	247	263	297	336	393	428	475	510	556	593	676
		EER	kW/kW	3,6	3,89	3,59	3,7	3,37	3,53	3,4	3,47	3,37	3,45	3,34	3,38
		Eurovent class		C	A	C	B	D	C	D	D	D	D	E	D
Standard unit Seasonal energy efficiency**		**SEER 12/7°C Comfort low temp.**	**kWh/kWh**	**4,15**	**4,18**	**4,10**	**4,09**	**4,10**	**4,15**	**4,19**	**4,21**	**4,16**	**4,15**	**4,12**	**4,10**
		ηs cool 12/7°C	**%**	**163**	**164**	**161**	**161**	**161**	**163**	**165**	**165**	**163**	**163**	**162**	**161**
		SEPR 12/7°C Process high temp.	kWh/kWh	4,77	4,71	4,29	4,76	4,33	4,56	4,46	4,67	4,50	4,79	4,64	4,74
Unit with low temperature brine option Seasonal energy efficiency **		**SEPR -2/-8°C Process medium temp. *** **	**kWh/ kWh**	**2,81**	**3,08**	**3,14**	**2,99**	**3,13**	**3,05**	**3,04**	**2,76**	**3,23**	NA	NA	NA
Part Load integrated values		IPLV.SI	kW/kW	4,566	4,570	4,538	4,508	4,500	4,610	4,612	4,690	4,579	4,618	4,555	4,579
Sound levels															
Standard unit															
Sound power(1)			dB(A)	91	92	92	92	92	93	93	93	93	94	94	94
Sound pressure at 10 m(2)			dB(A)	59	60	60	60	60	60	60	61	61	62	62	62
Unit + Low Noise option															
Sound power(1)			dB(A)	86	87	87	88	88	89	89	90	90	90	90	91
Sound pressure at 10 m(2)			dB(A)	54	55	55	56	56	57	57	58	58	58	58	59
Unit + Xtra Low Noise option															
Sound power(1)			dB(A)	81	81	81	82	82	83	83	84	84	85	85	85
Sound pressure at 10 m(2)			dB(A)	49	49	49	50	50	51	51	52	52	53	53	53
Dimensions - Standard unit															
Length			mm	2410					3604				4797		
Width			mm	2253					2253				2253		
Height			mm	2343					2343				2343		
Unit + Buffer tank module option			mm	3604					4798				5991		
Operating weight(3)															
Standard unit			kg	1263	1309	1310	1439	1461	1938	1973	2146	2203	2641	2658	2864
Unit + Low Noise option			kg	1346	1392	1393	1547	1569	2064	2099	2289	2347	2803	2820	3044
Unit + Low Noise option + HP dual-pump hydraulic module			kg	1524	1570	1570	1725	1761	2260	2340	2530	2587	3084	3101	3361
Unit + Low Noise option + HP dual-pump hydraulic module + water buffer tank module			kg	2483	2529	2529	2684	2720	3219	3299	3489	3546	4043	4060	4320
Compressors				Hermetic Scroll 48.3 r/s											
Circuit A				1	1	1	2	2	2	2	3	3	3	3	4
Circuit B				2	2	2	2	2	3	3	3	3	4	4	4
No. of power stages				3	3	3	4	4	5	5	6	6	7	7	8
Refrigerant(3)				R410A (GWP = 2088)											

*	In accordance with standard EN14511-3:2013.
**	In accordance with standard EN14825:2016, average climate conditions.
***	30 % brine solution
CA1	Cooling mode conditions: evaporator water inlet/outlet temperature 12 °C/7 °C, outdoor air temperature 35 °C, evaporator fouling factor 0 m². k/W
CA2	Cooling mode conditions: evaporator water inlet/outlet temperature 23 °C/18 °C, outdoor air temperature 35 °C, evaporator fouling factor 0 m². k/W
ηs cool 12/7 °C & SEER 12/7 °C	**Values in bold comply with Ecodesign Regulation (EU) No. 2016/2281 for Comfort application**
SEPR 12/7°C	Values calculated according to EN14825:2016
SEPR -2/-8°C	**Values in bold comply with Ecodesign Regulation (EU) No. 2015/1095 for Process application**
NA	Not authorised for the specific application for the EEC market
IPLV.SI	Calculated as per AHRI standard 551-591 (SI).
(1)	in dB ref=$10^{-(12)}$ W, 'A' weighted. Declared dual number noise emission values in accordance with ISO 4871 with an associated uncertainty of +/-3 dB(A). Measured in accordance with ISO 9614-1 and certified by Eurovent.
(2)	In dB ref 20µPa, 'A' weighted. Declared dual-number noise emission values in accordance with ISO 4871 with an associated uncertainty of +/-3dB(A). For information, calculated from the sound power Lw(A).
(3)	Values are guidelines only. Refer to the unit name plate.

EUROVENT CERTIFIED PERFORMANCE www.eurovent-certification.com

Eurovent certified values

1

TECHNICAL CHARACTERISTICS

AQUACIAT POWER LD ST		602	650	750	800	1000	1100	1250	1350	1500	1600	1750	2000
Circuit A	kg	8,4	10,9	10,9	12,6	13,1	14,7	15,4	20,3	21,1	23,5	23,5	26,75
	tCO_2e	17,5	22,8	22,8	26,3	27,4	30,7	32,2	42,4	44,1	49,1	49,1	55,9
Circuit B	kg	12,25	12,6	12,6	12,7	13,1	20,2	20,2	20,4	22,2	26,7	26,8	26,95
	tCO_2e	25,6	26,3	26,3	26,5	27,4	42,2	42,2	42,6	46,4	55,7	56	56,3
Oil charge													
	l/cp	6,9	6,9	6,9	6,9	6,9	6,9	6,9	6,9	6,9	6,9	6,9	6,9
Control		Connect Touch Control											
Minimum capacity	%	33%	33%	33%	25%	25%	20%	20%	17%	17%	14%	14%	13%
Air-cooled exchanger		All-aluminium microchannel heat exchanger (MCHE)											
Fans - Standard unit													
Quantity		3	4	4	4	4	5	5	6	6	7	7	8
Maximum total air flow	l/s	13542	18056	18056	18056	18056	22569	22569	27083	27083	31597	31597	36111
Maximum rotation speed	r/s	16	16	16	16	16	16	16	16	16	16	16	16
Water type heat exchanger		Dual-circuit plate heat exchanger											
Water volume	l	15	15	15	15	19	27	35	33	42	44	47	53
Max. water-side operating pressure without hydraulic module	kPa	1000	1000	1000	1000	1000	1000	1000	1000	1000	1000	1000	1000
Hydraulic module (option)		Pump, Victaulic screen filter, relief valve, water and air vent valve, pressure sensors											
Pump		Centrifugal pump, monocell, 48.3 r/s, low- or high-pressure (as required), single or dual (as required)											
Expansion vessel volume (option)	l	50	50	50	50	50	80	80	80	80	80	80	80
Buffer tank volume (optional)	l	550	550	550	550	550	550	550	550	550	550	550	550
Max. water-side operating pressure with hydraulic module	kPa	400	400	400	400	400	400	400	400	400	400	400	400
Water connections with/without hydraulic module		Victaulic® type											
Connections	inch	3	3	3	3	3	4	4	4	4	4	4	4
External diameter	mm	88,9	88,9	88,9	88,9	88,9	114,3	114,3	114,3	114,3	114,3	114,3	114,3
Casing paint		Colour code RAL 7035/RAL 7024											

106

TECHNICAL CHARACTERISTICS

AQUACIAT POWER LD HE				602	650	750	800	1000	1100	1250	1350	1500	1600	1750	2000
Cooling															
Standard unit Full load performances*	CA1	Nominal capacity	kW	168	180	197	216	261	300	331	365	397	430	464	523
		EER	kW/kW	3,04	3,12	2,98	2,97	2,90	2,97	2,92	2,95	2,90	2,94	2,90	2,90
		Eurovent class		B	A	B	B	B	B	B	B	B	B	B	B
	CA2	Nominal capacity	kW	216	247	263	297	336	393	428	475	510	556	593	676
		EER	kW/kW	3,6	3,89	3,59	3,7	3,37	3,53	3,4	3,47	3,37	3,45	3,34	3,38
		Eurovent class		C	A	C	B	D	C	D	D	D	D	E	D
Standard unit Seasonal energy efficiency**		**SEER $_{12/7°C}$ Comfort low temp.**	**kWh/kWh**	**4,32**	**4,29**	**4,18**	**4,25**	**4,20**	**4,52**	**4,40**	**4,52**	**4,37**	**4,45**	**4,53**	**4,40**
		ηs cool $_{12/7°C}$	**%**	**170**	**169**	**164**	**167**	**165**	**178**	**173**	**178**	**172**	**175**	**178**	**173**
		SEPR $_{12/7°C}$ Process high temp.	**kWh/kWh**	**5,43**	**5,61**	**5,32**	**5,56**	**5,16**	**5,60**	**5,24**	**5,62**	**5,32**	**5,50**	**5,38**	**5,26**
Unit + low temperature brine solution option Seasonal energy efficiency**		**SEPR $_{-2/-8°C}$ Process medium temp. *** **	**kWh/kWh**	**3,03**	**3,40**	**3,38**	**3,33**	**3,22**	**3,40**	**3,06**	**3,47**	**3,42**	NA	NA	NA
Part Load integrated values		IPLV.SI	kW/kW	4,758	4,855	4,733	4,849	4,749	4,999	4,833	5,004	4,815	4,925	4,999	4,839
Sound levels															
Standard unit															
Sound power(1)			dB(A)	91	92	92	92	92	93	93	93	93	94	94	94
Sound pressure at 10 m(2)			dB(A)	59	60	60	60	60	60	60	61	61	62	62	62
Unit + Low Noise option															
Sound power(1)			dB(A)	86	87	87	88	88	89	89	90	90	90	90	91
Sound pressure at 10 m(2)			dB(A)	54	55	55	56	56	57	57	58	58	58	58	59
Unit + Xtra Low Noise option															
Sound power(1)			dB(A)	81	81	81	82	82	83	83	84	84	85	85	85
Sound pressure at 10 m(2)			dB(A)	49	49	49	50	50	51	51	52	52	53	53	53
Dimensions - Standard unit															
Length			mm	2410					3604				4797		
Width			mm	2253					2253				2253		
Height			mm	2343					2343				2343		
Unit + Buffer tank module option			mm	3604					4798				5991		
Operating weight(3)															
Standard unit			kg	1292	1338	1338	1468	1489	1964	1999	2170	2228	2683	2700	2914
Unit + Low Noise option			kg	1375	1421	1421	1576	1597	2090	2125	2314	2371	2846	2863	3094
Unit + Low Noise option + HP dual-pump hydraulic module			kg	1552	1598	1599	1753	1790	2285	2366	2555	2611	3126	3143	3411
Unit + Low Noise option + HP dual-pump hydraulic module + Buffer tank module			kg	2511	2557	2558	2712	2749	3244	3325	3514	3570	4085	4102	4370
Compressors				Hermetic Scroll 48.3 r/s											
Circuit A				1	1	1	2	2	2	2	3	3	3	3	4
Circuit B				2	2	2	2	2	3	3	3	3	4	4	4
No. of power stages				3	3	3	4	4	5	5	6	6	7	7	8

*	In accordance with standard EN14511-3:2013.
**	In accordance with standard EN14825:2016, average climate conditions.
***	With 30 % brine solution
CA1	Conditions in cooling mode: Evaporator water inlet/outlet temperature 12 °C/7 °C, outdoor air temperature 35°C, evaporator fouling factor 0 m^2. k/W.
CA2	Cooling mode conditions: evaporator water inlet/outlet temperature 23 °C/18 °C, outdoor air temperature 35 °C, evaporator fouling factor 0 m^2. k/W.
ηs cool $_{12/7°C}$ & SEER $_{12/7°C}$	**Values in bold comply with Ecodesign Regulation (EU) No. 2016/2281 for Comfort application**
SEPR $_{12/7°C}$	**Values in bold comply with Ecodesign Regulation (EU) No. 2016/2281 for Process application**
SEPR $_{-2/-8°C}$	**Values in bold comply with Ecodesign Regulation (EU) No. 2015/1095 for Process application**
NA	Not authorised for the specific application for the EEC market.
IPLV.SI	Calculated as per AHRI standard 551-591 (SI).
(1)	in dB ref=$10^{-(12)}$ W, 'A' weighted. Declared dual-number noise emission values in accordance with ISO 4871 with an associated uncertainty of +/-3dB(A). Measured in accordance with ISO 9614-1 and certified by Eurovent.
(2)	In dB ref 20µPa, 'A' weighted. Declared dual-number noise emission values in accordance with ISO 4871 with an associated uncertainty of +/-3dB(A). For information, calculated from the sound power level Lw(A).
(3)	Values are guidelines only. Refer to the unit name plate.

EUROVENT CERTIFIED PERFORMANCE
www.eurovent-certification.com

Eurovent certified values

TECHNICAL CHARACTERISTICS

AQUACIAT POWER LD HE		602	650	750	800	1000	1100	1250	1350	1500	1600	1750	2000
Refrigerant(3)		R410A (GWP = 2088)											
Circuit A	kg	8,40	10,90	10,90	12,60	13,10	14,70	15,40	20,30	21,10	23,50	23,50	26,75
	tCO_2e	17,5	22,8	22,8	26,3	27,4	30,7	32,2	42,4	44,1	49,1	49,1	55,9
Circuit B	kg	12,25	12,60	12,60	12,70	13,10	20,20	20,20	20,40	22,20	26,70	26,80	26,95
	tCO_2e	25,6	26,3	26,3	26,5	27,4	42,2	42,2	42,6	46,4	55,7	56,0	56,3
Oil charge													
	l/cp	6,9	6,9	6,9	6,9	6,9	6,9	6,9	6,9	6,9	6,9	6,9	6,9
Control		Connect Touch Control											
Minimum capacity	%	33%	33%	33%	25%	25%	20%	20%	17%	17%	14%	14%	13%
Air-cooled exchanger		All-aluminium microchannel heat exchanger (MCHE)											
Fans - Standard unit													
Quantity		3	4	4	4	4	5	5	6	6	7	7	8
Maximum total air flow	l/s	13542	18056	18056	18056	18056	22569	22569	27083	27083	31597	31597	36111
Maximum rotation speed	r/s	16	16	16	16	16	16	16	16	16	16	16	16
Water type heat exchanger		Dual-circuit plate heat exchanger											
Water volume	l	15	15	15	15	19	27	35	33	42	44	47	53
Max. water-side operating pressure without hydraulic module	kPa	1000	1000	1000	1000	1000	1000	1000	1000	1000	1000	1000	1000
Hydraulic module (option)		Pump, Victaulic screen filter, relief valve, water and air vent valve, pressure sensors											
Pump		Centrifugal pump, monocell, 48.3 r/s, low- or high-pressure (as required), single or dual (as required)											
Expansion vessel volume (option)	l	50	50	50	50	50	80	80	80	80	80	80	80
Buffer tank volume (optional)	l	550	550	550	550	550	550	550	550	550	550	550	550
Max. water-side operating pressure with hydraulic module	kPa	400	400	400	400	400	400	400	400	400	400	400	400
Water connections with/without hydraulic module		Victaulic® type											
Connections	inch	3	3	3	3	3	4	4	4	4	4	4	4
External diameter	mm	88,9	88,9	88,9	88,9	88,9	114,3	114,3	114,3	114,3	114,3	114,3	114,3
Casing paint		Colour code RAL 7035/RAL 7024											

108

TECHNICAL CHARACTERISTICS

AQUACIAT POWER LD HE				2100	2350	2550	2800
Cooling							
Standard unit Full load performances*	CA1	Nominal capacity	kW	580	630	678	740
		EER	kW/kW	2,84	2,78	2,72	2,69
		Eurovent class		C	C	C	D
Standard unit Seasonal energy efficiency**		**SEER 12/7°C Comfort low temp.**	**kWh/kWh**	**4,35**	**4,18**	**4,20**	**4,26**
		ηs cool 12/7°C	**%**	**171**	**164**	**165**	**167**
		SEPR 12/7°C Process high temp.	**kWh/kWh**	**5,33**	**5,26**	**5,21**	**5,22**
Part Load integrated values		IPLV.SI	kW/kW	4,550	4,460	4,450	4,510
Sound levels							
Standard unit							
Sound power(1)			dB(A)	95	95	96	96
Sound pressure at 10 m(2)			dB(A)	63	63	63	63
Unit + Low Noise option							
Sound power(1)			dB(A)	93	94	94	94
Sound pressure at 10 m(2)			dB(A)	61	62	61	62
Unit + Xtra Low Noise option							
Sound power(1)			dB(A)	89	89	89	90
Sound pressure at 10 m(2)			dB(A)	57	57	56	57
Dimensions - Standard unit							
Length			mm	5995	5995	7189	7189
Width			mm	2253			
Height			mm	2297			
Unit + Buffer tank module option			mm	-			
Operating weight(3)							
Standard unit			kg	4675	4930	5393	5649
Unit + Low Noise option			kg	4876	5148	5628	5901
Compressors				Hermetic Scroll 48.3 r/s			
Circuit A				3	3	4	4
Circuit B				3	3	4	4
Circuit C				3	4	3	4
No. of power stages				9	10	11	12
Refrigerant(3)				R410A			
Circuit A			kg	21,50	21,50	26,00	26,00
			tCO_2e	44,9	44,9	54,3	54,3
Circuit B			kg	22,0	21,5	28,0	28,0
			tCO_2e	45,9	44,9	58,5	58,5
Circuit C			kg	23,50	28,00	24,00	31,00
			tCO_2e	49,1	58,5	50,1	64,7

*	In accordance with standard EN14511-3:2013.
**	In accordance with standard EN14825:2016, average climate conditions.
CA1	Cooling mode conditions: evaporator water inlet/outlet temperature 12 °C/7 °C, outdoor air temperature 35 °C, evaporator fouling factor 0 m^2. k/W.
ηs cool 12/7°C & SEER 12/7°C	**Values in bold comply with Ecodesign Regulation (EU) No. 2016/2281 for Comfort application**
SEPR 12/7°C	**Values in bold comply with Ecodesign Regulation (EU) No. 2016/2281 for Process application**
IPLV.SI	Calculated as per AHRI standard 551-591 (SI).
(1)	in dB ref=$10^{-(12)}$ W, 'A' weighted. Declared dual number noise emission values in accordance with ISO 4871 with an associated uncertainty of +/-3 dB(A). Measured in accordance with ISO 9614-1 and certified by Eurovent.
(2)	In dB ref 20µPa, 'A' weighted. Declared dual-number noise emission values in accordance with ISO 4871 with an associated uncertainty of +/-3dB(A). For information, calculated from the sound power Lw(A).
(3)	Values are guidelines only. Refer to the unit name plate.

EUROVENT CERTIFIED PERFORMANCE
www.eurovent-certification.com

Eurovent certified values

TECHNICAL CHARACTERISTICS

AQUACIAT POWER LD HE		2100	2350	2550	2800
Oil charge					
	l/cp	6,9	6,9	6,9	6,9
Control		Connect 3			
Minimum capacity	%	11%	10%	9%	8%
Air-cooled exchanger		All-aluminium microchannel heat exchanger (MCHE)			
Fans - Standard unit					
Quantity		9	10	11	12
Maximum total air flow	l/s	40623	45139	49653	54167
Maximum rotation speed	r/s	16	16	16	16
Water type heat exchanger		9	10	11	12
Water volume	l	284	284	284	284
Max. water-side operating pressure without hydraulic module	kPa	16	16	16	16
Water connections without hydraulic module		Victaulic® type			
Connections	inch	6	6	6	6
External diameter	mm	168,3	168,3	168,3	168,3
Casing paint		Colour code RAL 7035/RAL 7024			

ELECTRICAL DATA

Basic unit (excluding pump)

AQUACIAT POWER LD ST		602	650	750	800	1000	1100	1250	1350	1500	1600	1750	2000
Power circuit													
Nominal voltage	V-ph-Hz	400 - 3 -50											
Voltage range	V	360 - 440											
Control circuit supply		24 V via internal transformer											
Nominal unit current draw(1)													
Circuit A&B	A	100	110	124	133	161	180	201	221	242	261	282	322
Max. operating input power(2)													
Circuit A&B	kW	80	88	99	107	129	145	161	177	194	210	226	258
Unit power factor at maximum power(2)		0,88	0,87	0,87	0,88	0,88	0,88	0,88	0,88	0,88	0,88	0,88	0,88
Maximum unit current draw (Un-10%)(3)													
Circuit A&B	A	144	158	176	192	230	259	288	317	345	374	403	460
Max. current draw (Un)(4)													
Circuit A&B - Standard unit	A	133	146	163	177	212	239	266	292	319	345	372	425
Circuit A&B - Unit + Power factor corrector option	A	100	110	125	133	163	181	204	222	244	262	285	326
Maximum start-up current, standard unit (Un)(5)													
Circuit A&B	A	307	356	374	352	423	450	476	503	529	556	583	636
Maximum start-up current, unit with soft starter (Un)(5)													
Circuit A&B	A	261	283	300	305	349	376	403	429	456	482	509	562

(1) Conditions equivalent to the standardised Eurovent conditions (water exchanger water inlet/outlet temperature = 12°C/7°C, outdoor air temperature = 35°C).
(2) Power input, compressors + fans, at the unit operating limits (saturated suction temperature: 15 °C, saturated condensation temperature 68.3 °C) and nominal voltage of 400 V (data given on the unit's nameplate).
(3) Maximum unit operating current at maximum unit power input and 360 V.
(4) Maximum unit operating current at maximum unit input power and 400 V (data given on the unit's name plate).
(5) Maximum instantaneous starting current at the operating limits (maximum operating current of the smallest compressor(s) + current of the fan(s) + locked rotor current of the largest compressor).
Fan motor electrical data at Eurovent equivalent conditions and motor ambient air temperature of 50 °C at 400 V: current 3.8 A, starting current 20 A, input power: 1.75 kW.

1

AQUACIAT POWER LD HE		602	650	750	800	1000	1100	1250	1350	1500	1600	1750	2000
Power circuit													
Nominal voltage	V-ph-Hz	400 - 3 -50											
Voltage range	V	360 - 440											
Control circuit supply		24 V via internal transformer											
Nominal unit current draw(1)													
Circuit A&B	A	97	107	121	130	158	176	197	216	237	255	276	316
Max. operating input power(2)													
Circuit A&B	kW	81	88	99	108	129	145	162	178	194	210	226	259
Unit power factor at maximum power(2)		0,88	0,88	0,88	0,88	0,88	0,88	0,88	0,88	0,88	0,88	0,88	0,88
Unit max. operating current (Un-10%)(3)													
Circuit A&B	A	142	154	173	189	227	255	284	312	340	369	397	454
Max. current draw (Un)(4)													
Circuit A&B - Standard unit	A	131	142	160	174	209	235	262	287	314	340	366	419
Circuit A&B - Unit + Power factor correction option	A	98	108	123	131	161	178	201	219	241	259	281	321
Maximum start-up current, standard unit (Un)(5)													
Circuit A&B	A	305	353	371	349	420	446	472	498	525	550	577	629
Maximum start-up current, unit with soft starter (Un)(5)													
Circuit A&B	A	259	279	297	302	346	372	399	424	451	477	503	556

(1) Conditions equivalent to the standardised Eurovent conditions (water exchanger water inlet/outlet temperature = 12°C/7°C, outdoor air temperature = 35°C).
(2) Power input, compressors + fans, at the unit operating limits (saturated suction temperature: 15 °C, saturated condensation temperature: 68.3 °C) and nominal voltage of 400 V (data given on the unit's name plate).
(3) Maximum unit operating current at maximum unit power input and 360 V.
(4) Maximum unit operating current at maximum unit input power and 400 V (data given on the unit's name plate).
(5) Maximum instantaneous starting current at the operating limits (maximum operating current of the smallest compressor(s) + current of the fan(s) + locked rotor current of the largest compressor).
Fan motor electrical data reported upstream of the variable speed drive at Eurovent equivalent conditions and motor ambient air temperature of 50°C at 400 V: current 3.0 A; starting current 20 A; power input: 1.75 kW.

ELECTRICAL DATA

AQUACIAT POWER LD HE		2100	2350	2550	2800
Power circuit					
Nominal voltage	V-ph-Hz	400 - 3 -50			
Voltage range	V	360 - 440			
Control circuit supply		24 V via internal transformer			
Nominal unit current draw(1)					
Circuit A&B (single supply)	A	216	216	288	288
Circuit C (separate supply)	A	118	158	118	158
Max. operating input power(2)					
Circuit A&B (single supply)	kW	178	178	237	237
Circuit C (separate supply)	kW	97	129	97	129
Unit power factor at maximum power(2)		0,89	0,89	0,89	0,89
Maximum unit current draw (Un-10%)(3)					
Circuit A&B (single supply)	A	312	312	416	416
Circuit C (separate supply)	A	170	227	170	227
Max. current draw (Un)(4)					
Circuit A&B (single supply)	A	287	287	383	383
Circuit C (separate supply)	A	157	209	157	209
Maximum start-up current, standard unit (Un)(5)					
Circuit A&B	A	498	498	594	594
Circuit C	A	368	420	368	420

(1) Conditions equivalent to the standardised Eurovent conditions (water exchanger water inlet/outlet temperature = 12°C/7°C, outdoor air temperature = 35°C).
(2) Power input, compressors + fans, at the unit operating limits (saturated suction temperature: 10 °C, saturated condensation temperature: 65 °C) and nominal voltage of 400 V (data given on the unit's nameplate).
(3) Maximum unit operating current at maximum unit power input and 360 V.
(4) Maximum unit operating current at maximum unit input power and 400 V (data given on the unit's name plate).
(5) Maximum instantaneous starting current at the operating limits (maximum operating current of the smallest compressor(s) + current of the fan(s) + locked rotor current of the largest compressor).
Fan motor electrical data reported upstream of the variable speed drive at Eurovent equivalent conditions and motor ambient air temperature of 50°C at 400 V: current 3.0 A; starting current 20 A; power input: 1.75 kW.

Short circuit current withstand capability (TN system(1))

AQUACIAT POWER LD ST/HE	602	650	800	900	902	1000	1150	1200	1400	1600	1800	2000
Value without upstream protection												
Short time (1s) assigned current - Icw - kA eff	8	8	8	8	8	8	15	15	15	15	20	20
Allowable peak assigned current - Ipk - kA pk	30	30	30	30	30	30	65	65	65	65	80	80
Value with upstream protection												
Protection type: Fuse												
Rated conditional short circuit current Icc or Icf - kA eff	50	50	50	50	50	50	50	50	50	50	50	50
Assigned gL/gG fuses	200	200	200	250	250	250	315	315	400	400	630	630

(1) Type of system earthing

ELECTRICAL DATA

AQUACIAT POWER LD HE		2100	2350	2550	2800
Without disconnect switch					
With fuses upstream - maximum fuse values assigned (gL/gG)					
Circuits A & B	A	630/500	630/500	630/500	630/500
Circuit C	A	400	400	400	400
With fuses upstream - useful current carrying capacity (gL/gG)					
Circuits A & B	kA	70	70	60/70	60/70
Circuit C	kA	60	60	60	60
With main disconnect switch without fuse option					
Rated short-time withstand current Icw(**), (1s) rms value/peak Ipk(***)					
Circuits A & B	A	13/26	13/26	15/30	15/30
Circuit C	A	13/26	13/26	13/26	13/26
With fuses upstream - maximum fuse values assigned (gL/gG)					
Circuits A & B	A	400	400	630	630
Circuit C	A	400	400	400	400
With fuses upstream - conditional short-circuit assigned current (Icc)/Icf††					
Circuits A & B	kA	50	50	50	50
Circuit C	kA	50	50	50	50
With main disconnect switch with fuses option					
Icc/Icf†† withstand current increased with fuses - maximum fuse values assigned (gL/gG)					
Circuits A & B	A	400	400	630	630
Circuit C	A	250	250	250	250
Icc/Icf†† withstand current increased with fuses - useful current carrying capacity (gL/gG)					
Circuits A & B	kA	50	50	50	50
Circuit C	kA	50	50	50	50

* Type of system earthing
** Icw: short-time assigned current
*** Ipk: allowable peak assigned current
†† Icc/Icf: conditional short circuit assigned current

1

Dimensions

■ AQUACIAT POWER LD ST-HE 602 to 1000 Without buffer tank

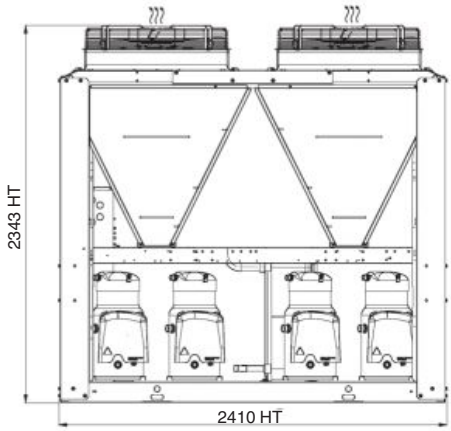

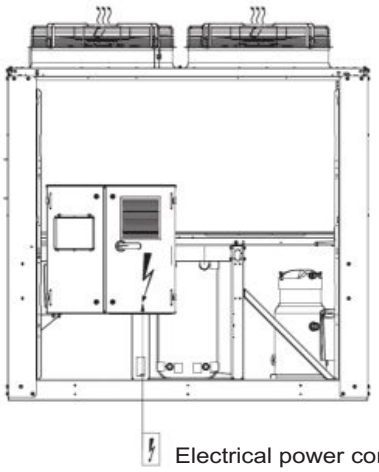

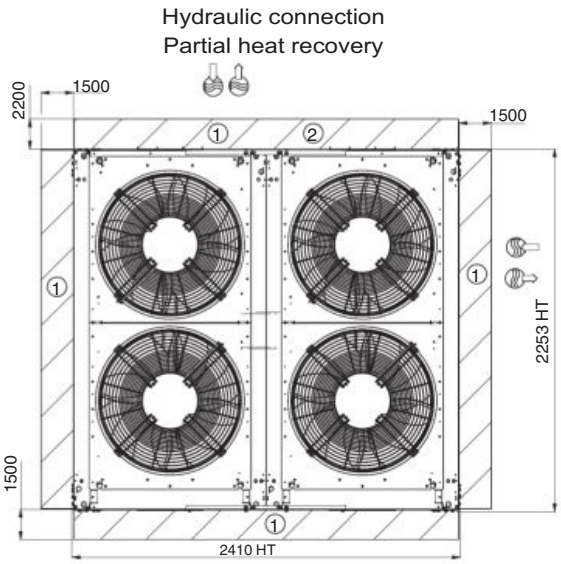

Key
All dimensions in mm

- (1) Clearance required for maintenance and air flow
- (2) Clearance recommended for removal of the coils
- Water inlet
- Water outlet
- Air outlet, do not obstruct
- Electrical cabinet

Notes:
Non-contractual drawings.

When designing a system, refer to the certified dimensional drawings provided with the unit or available on request.

Please refer to the certified dimensional drawings for the positioning of the fixing points, weight distribution points and centre of gravity coordinates.

Dimensions

■ AQUACIAT POWER LD ST-HE 602 to 1000 With buffer tank

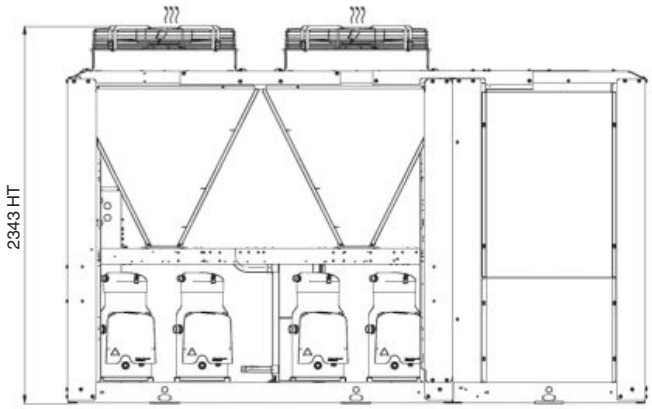

Main hydraulic connection

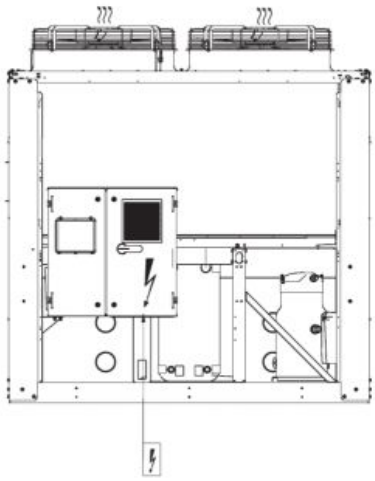

Electrical power connection

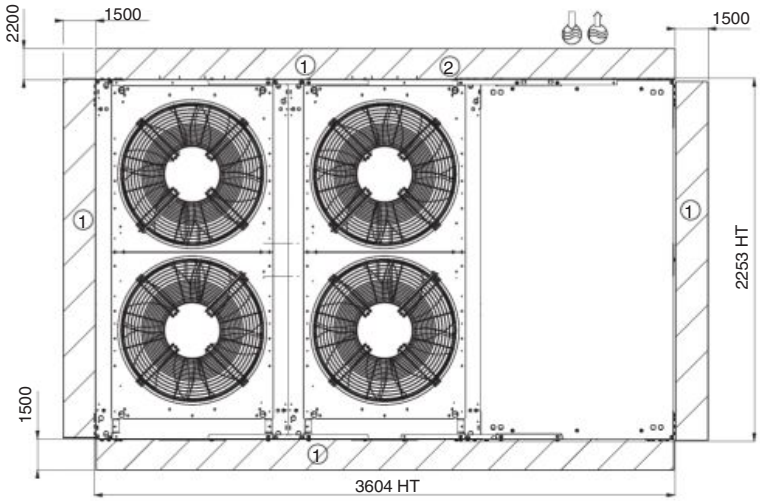

Key
All dimensions in mm

- (1) Clearance required for maintenance and air flow
- (2) Clearance recommended for removal of the coils
- Water inlet
- Water outlet
- Air outlet, do not obstruct
- Electrical cabinet

Notes:
Non-contractual drawings.

When designing a system, refer to the certified dimensional drawings provided with the unit or available on request.

Please refer to the certified dimensional drawings for the positioning of the fixing points, weight distribution points and centre of gravity coordinates.

Dimensions

■ AQUACIAT POWER LD ST-HE 1100 to 1500 Without buffer tank

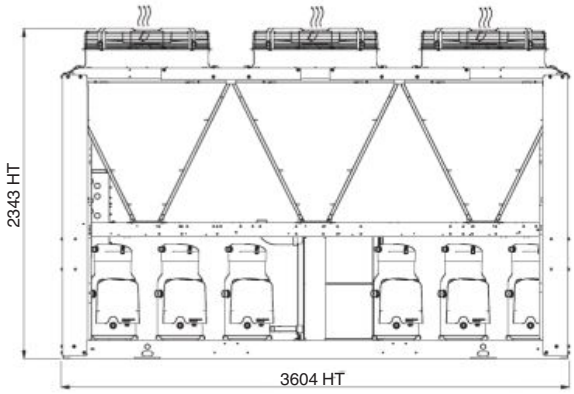

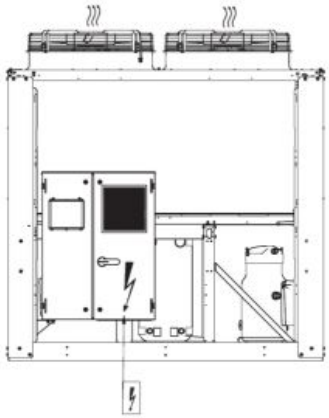

Electrical power connection

Hydraulic connection
Partial heat recovery

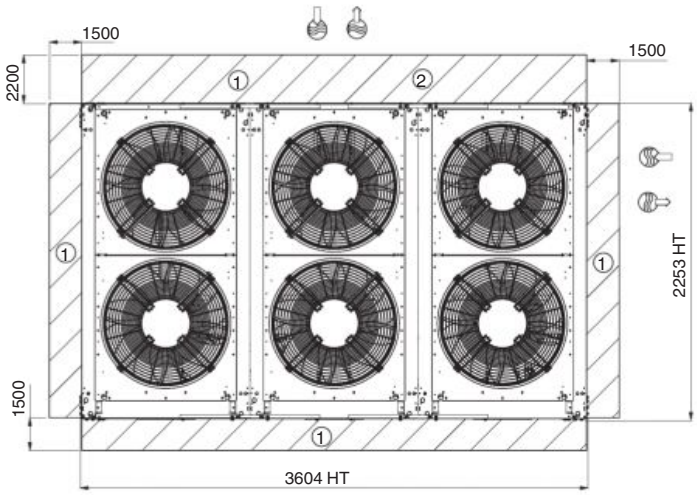

Main hydraulic connection

Key
All dimensions in mm

- (1) Clearance required for maintenance and air flow
- (2) Clearance recommended for removal of the coils
- Water inlet
- Water outlet
- Air outlet, do not obstruct
- Electrical cabinet

Notes:
Non-contractual drawings.

When designing a system, refer to the certified dimensional drawings provided with the unit or available on request.

Please refer to the certified dimensional drawings for the positioning of the fixing points, weight distribution points and centre of gravity coordinates.

Dimensions

■ AQUACIAT POWER LD ST-HE 1100 to 1500 With buffer tank

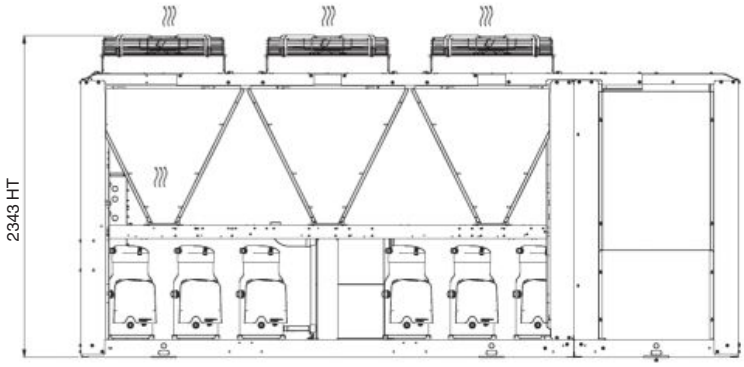

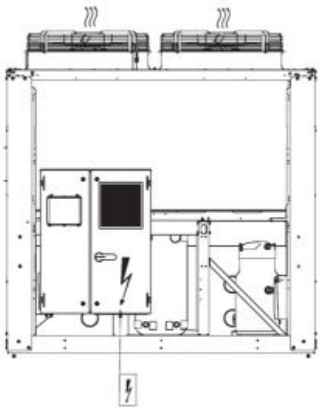

Electrical power connection

Main hydraulic connection

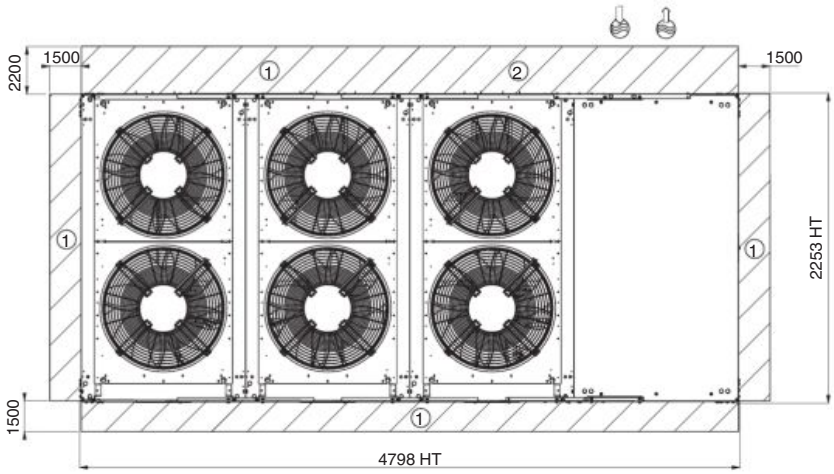

Key
All dimensions in mm

- (1) Clearance required for maintenance and air flow
- (2) Clearance recommended for removal of the coils
- Water inlet
- Water outlet
- Air outlet, do not obstruct
- Electrical cabinet

Notes:
Non-contractual drawings.

When designing a system, refer to the certified dimensional drawings provided with the unit or available on request.

Please refer to the certified dimensional drawings for the positioning of the fixing points, weight distribution points and centre of gravity coordinates.

Dimensions

■ AQUACIAT POWER LD ST-HE 1600 to 2000 Without buffer tank

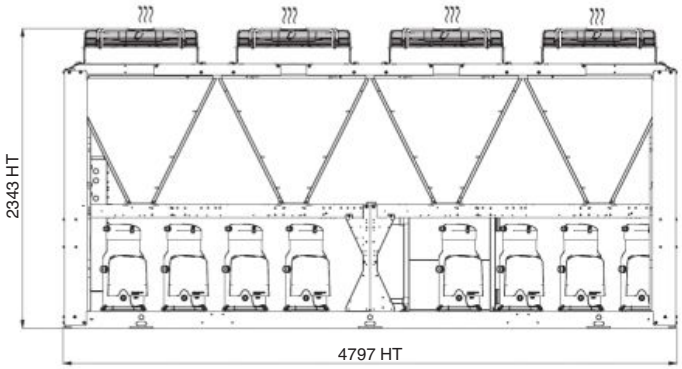

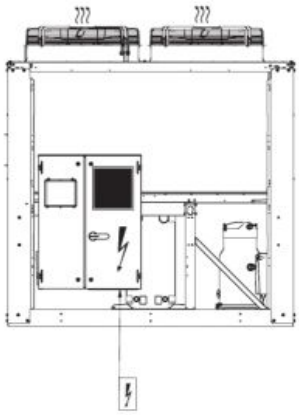

Electrical power connection

Hydraulic connection
Partial heat recovery

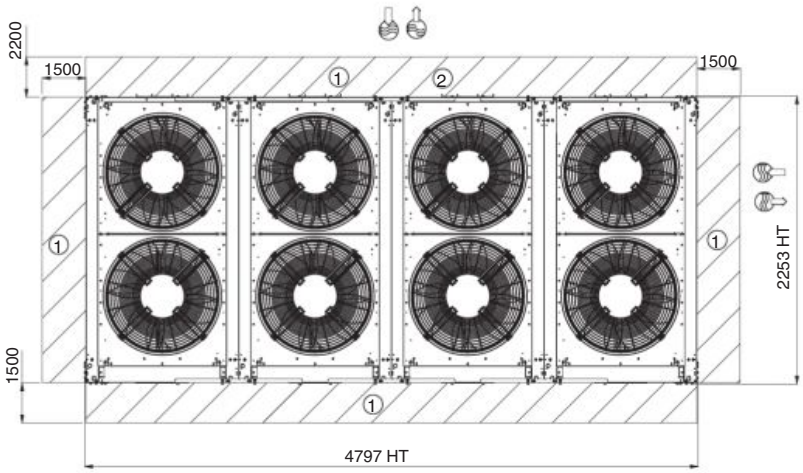

Main hydraulic connection

Key
All dimensions in mm

- (1) Clearance required for maintenance and air flow
- (2) Clearance recommended for removal of the coils
- Water inlet
- Water outlet
- Air outlet, do not obstruct
- Electrical cabinet

Notes:
Non-contractual drawings.

When designing a system, refer to the certified dimensional drawings provided with the unit or available on request.

Please refer to the certified dimensional drawings for the positioning of the fixing points, weight distribution points and centre of gravity coordinates.

Dimensions

■ AQUACIAT POWER LD ST-HE 1600 to 2000 With buffer tank

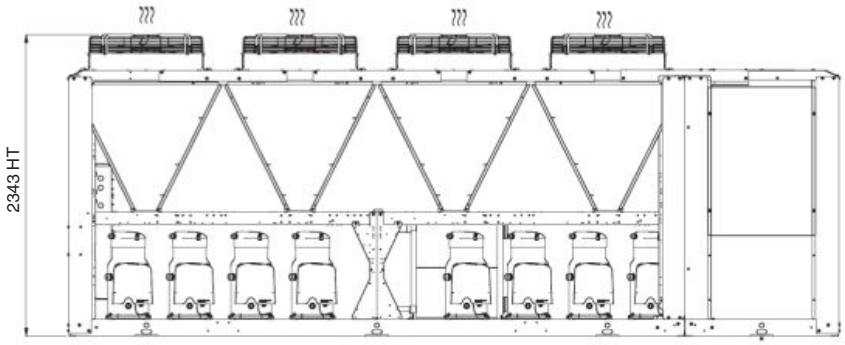

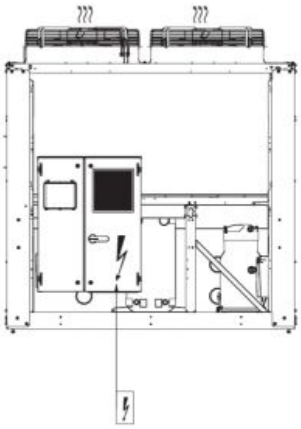

Main hydraulic connection

Electrical power connection

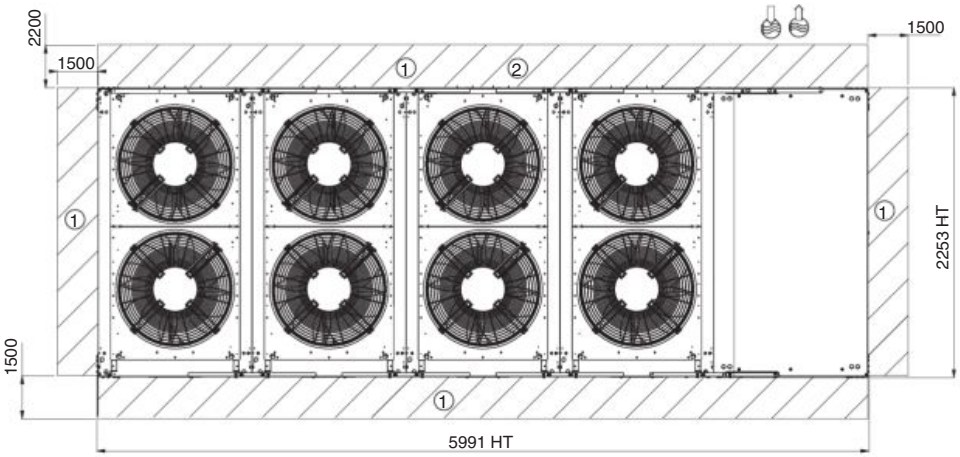

Key
All dimensions in mm

- (1) Clearance required for maintenance and air flow
- (2) Clearance recommended for removal of the coils
- Water inlet
- Water outlet
- Air outlet, do not obstruct
- Electrical cabinet

Notes:
Non-contractual drawings.

When designing a system, refer to the certified dimensional drawings provided with the unit or available on request.

Please refer to the certified dimensional drawings for the positioning of the fixing points, weight distribution points and centre of gravity coordinates.

Dimensions

■ AQUACIAT POWER LD HE 2100-2800

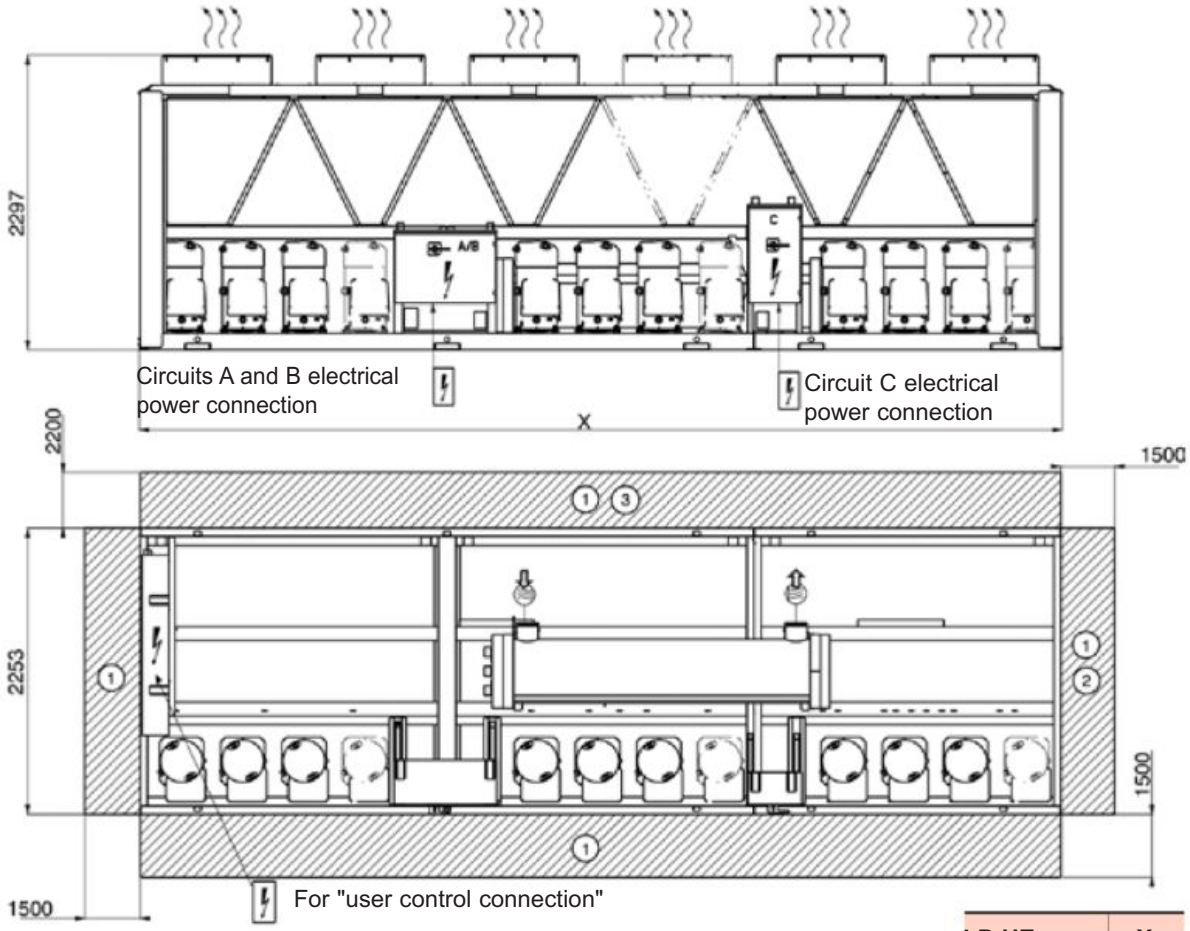

LD HE	X
2100-2350	5992
2550-2800	7186

Key
All dimensions in mm

- (1) Clearance required for maintenance and air flow
- (2) Clearance recommended for removal of the coils
- Water inlet
- Water outlet
- Air outlet, do not obstruct
- Electrical cabinet

Notes:
Non-contractual drawings.

When designing a system, refer to the certified dimensional drawings provided with the unit or available on request.

Please refer to the certified dimensional drawings for the positioning of the fixing points, weight distribution points and centre of gravity coordinates.

AQUACIAT POWER ILD
Heat pump

Energy excellence

Compact and silent

Scroll compressors

High-efficiency brazed plate heat exchangers

Self-adjusting electronic control

Cooling capacity: 156 to 511 kW

Cooling capacity: 173 to 537 kW

Cooling and heating **Hydraulic module** **Heat recovery**

Use

The new generation of **AQUACIAT POWER** high efficiency air-to-water heat pumps offers an optimal solution for all heating and cooling applications used for the Office, Healthcare, Industry, Administration, Shopping Centres and Collective housing sectors.

These units are designed for outdoor installation and require no special protection against adverse weather conditions.

AQUACIAT POWER is optimised to use ozone-friendly HFC R410A refrigerant.

This range guarantees compliance with the most demanding requirements for increased seasonal energy efficiency (ESEER and SCOP) and CO_2 reduction to comply with the various applicable European directives and regulations.

Range

AQUACIAT POWER ILD ST series

Standard reversible heat pump version

The product is optimised to meet the most demanding technical and economic requirements.

AQUACIAT POWER ILD HE series

High seasonal efficiency heat pump version.

The product is optimised for part load applications for which an optimum SEER and SCOP value is required. In this case, the machine is equipped as standard with variable-speed fans, allowing for optimisation of the partial load efficiency throughout the year.

DESCRIPTION

AQUACIAT POWER units are packaged machines supplied as standard with the following components:

- Hermetic SCROLL compressors
- Brazed plate condenser or evaporator water type heat exchanger
- Condenser or evaporator air-cooled exchanger, copper tube coil with aluminium fins and axial fan motor assembly
- Electrical power and remote control cabinet:
  - 400V-3ph-50Hz (+/-10%) general power supply + Earth
  - transformer fitted as standard on the machine for supplying the remote control circuit with 24V
- Connect Touch electronic control module
- Casing for outdoor installation

The entire AQUACIAT POWER range complies with the following EC directives and standards:

- Machinery directive 2006/42/EC.
- Electromagnetic compatibility directive 2014/30/EU.
- EMC immunity and emissions EN 61800-3 'C3'
- Low Voltage directive 2014/35/EU.
- RoHS 2011/65/EU
- Pressure equipment directive (PED) 2014/68/EU
- Machinery directive EN 60-204 -1
- Refrigeration systems and heat pumps EN 378-2
- Commission Regulation (EU) No. 813/2013 implementing directive 2009/125/EC setting the ecodesign requirements

DESCRIPTION

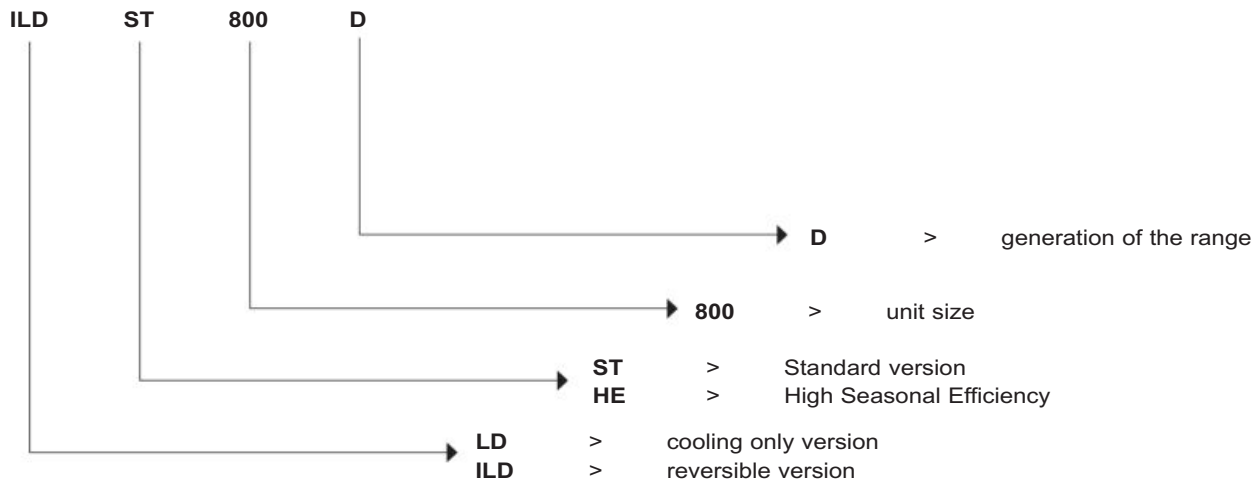

CONFIGURATION

ST	Standard	**HE**	High Seasonal Efficiency
ST LN option	Standard Low Noise	**HE LN option**	High Seasonal Efficiency Low Noise
		HE XLN Option	High Seasonal Efficiency Xtra Low Noise
		HE SLN Option	High Seasonal Efficiency Super Low Noise

DESCRIPTION OF THE MAIN COMPONENTS

Compressors

- Hermetic SCROLL type
- Electronic motor overheating protection
- Crankcase heater
- Mounted on anti-vibration mounts

Water type heat exchanger

- Asymmetrical brazed plate heat exchanger
- Plate patterns optimised for high efficiency
- 19 mm armaflex thermal insulation

Air-cooled exchanger

- Air-cooled exchanger, copper tube coil, aluminium fins
- Axial fans with composite blades offering an optimised profile, fixed speed (ST version) or variable speed (HE version)
- Motors – IP 54, class F

Refrigerant accessories

- Dehumidifier filters with rechargeable cartridges
- Hygroscopic sight glasses
- Electronic expansion valves
- Service valves on the liquid line
- 4-way cycle inversion valve in cooling/heating mode

Regulation and safety instruments

- Low and high pressure sensors
- Safety valves on the refrigerant circuit
- Water temperature control sensors
- Evaporator antifreeze protection sensor
- Factory-fitted evaporator water flow controller

Electrical cabinet

- Electrical cabinet with IP54 protection rating (IP44 for the entire unit)
- A connection point without neutral
- Front-mounted main safety switch with handle
- Control circuit transformer
- 24V control circuit
- Fan and compressor motor circuit breaker
- Fan and compressor motor contactors
- Connect Touch microprocessor-controlled electronic control module
- Wire numbering
- Marking of the main electrical components

Casing

Frame made from RAL 7035 light grey & RAL 7024 graphite grey painted panels

Connect Touch control module

- User interface with 4.3 inch touch screen
- Intuitive, user-friendly navigation using icons
- Clear text display of information available in 8 languages (F-GB-D-NL-E-I-P+Chinese)

The electronic control module performs the following main functions:

- Regulation of the chilled water temperature (at the return or at the outlet)
- Regulation of the water temperature based on the outdoor temperature (water law)
- Regulation for low temperature energy storage
- Second setpoint management
- Complete management of compressors with start-up sequence, timer and runtime balancing
- Self-regulating and proactive functions with adjustment of the control based on parameter drift
- In-series staged power control system on the compressors according to the thermal requirements
- Management of compressor short-cycle protection
- Frost protection (exchanger heater option)
- Phase reversal protection
- Optimised defrosting with free defrost function to optimise performance at partial load and the SCOP
- Management of occupied/unoccupied modes (according to the time schedule)
- Compressor and pump runtime balancing
- Management of the machine operation limit according to the outdoor temperature
- Sound level reduction device (night mode according to the user programme) with limitation of compressor capacity and fan speed
- Diagnosis of fault and operating statuses
- Management of a fault memory allowing a log of the last 50 incidents to be accessed, with operating readings taken when the fault occurs
- Blackbox memory
- Master/slave management of the two machines in parallel with runtime balancing and automatic changeover if a fault occurs on one machine
- Weekly and hourly time schedule for the machine, including 16 periods of absence
- Pump standby based on demand (energy saving)
- Calculation of the water flow rate and operating pressure (hydraulic module version)
- Electronic adjustment of the water pump speed and water flow rate (variable speed pump option)
- Display of all machine parameters (3 access levels, User/Maintenance/Factory, password-protected): temperature, setpoints, pressures, water flow rate (hydraulic version), runtime.
- Display of trend curves for the main values
- Storage of maintenance manual, wiring diagram and spare parts list.
- Innovative smart energy monitoring, providing users with smart data such as real-time electric energy consumption and heating and cooling capacity, and instantaneous and average energy efficiency rates.

Remote management

Connect Touch is equipped as standard with an RS485 port and an ETHERNET (IP) connection, offering a range of options for remote management, monitoring and diagnostics.

Using the integrated Webserver, a simple internet connection uses the unit's IP address to access the Connect Touch interface on the PC, facilitating everyday management tasks and maintenance operations.

A range of communication protocols are available: MODBUS/JBUS RTU (RS485) or TC/IP as standard, LONWORKS – BACNET IP as an option, enabling most CMS/BMS to be integrated

Several contacts are available as standard, enabling the machine to be controlled remotely by wired link:

- Automatic operation control: when this contact is open, the machine stops
- Heating/cooling mode selection
- Setpoint 1/setpoint 2 selector: when this contact is closed, a second cooling setpoint is activated (energy storage or unoccupied mode, for example)
- Power limitation: closing the contact concerned allows the power or refrigerating consumption of the machine to be limited by stopping one or more compressors (this limit can be set with a parameter)
- Fault reporting: this contact indicates the presence of a major fault which has caused one or both refrigerant circuits to stop
- Operational status reporting indicates that the unit is in production mode.
- Activation control for partial energy heat recovery unit using the desuperheater.
- Switch control for the customer pump, external to the machine (on/off).

Contacts available as an option:

- Setpoint adjustable via 4-20 mA signal: this input is used to adjust the setpoint in COOLING mode
- On/off control for a boiler
- 4-stage on/off management for additional heaters
- Power limitation adjustable by 4-20 mA signal
- Second power limitation level
- Power indication: analogue output (0-10 V) providing an indication of the unit's load rate.
- User fault reporting enables integration of a fault in the water loop
- General fault reporting: this contact indicates that the unit has stopped completely
- Alert reporting: this contact indicates the presence of a minor fault which did not cause the refrigerant circuit in question to stop.
- End of storage signal: enables return to the second setpoint at the end of the storage cycle
- Schedule override: closing this contact cancels the time schedule.
- Desuperheater activation control
- Desuperheater pump On/Off control

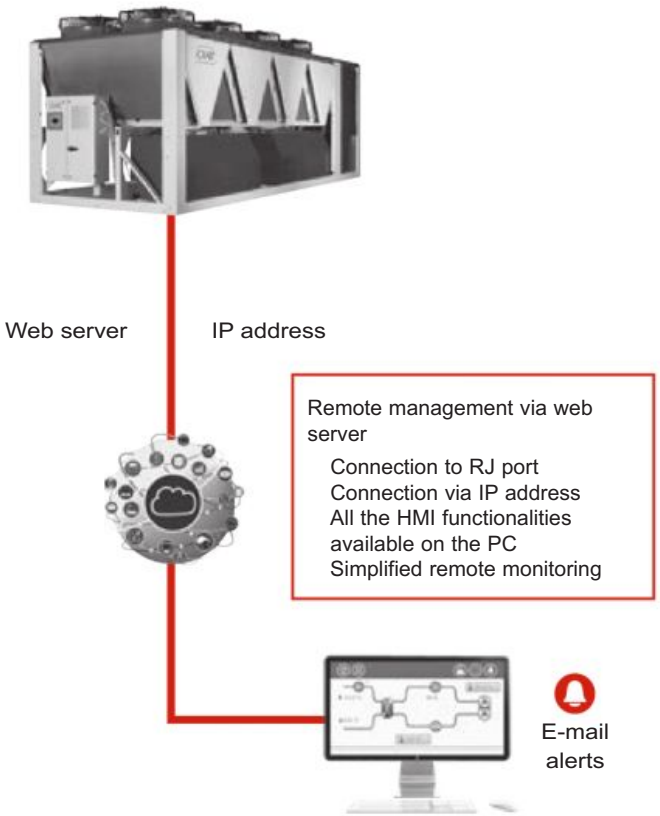

Maintenance

Connect Touch has two maintenance reminder functions as standard, making users aware of the need to regularly perform maintenance operations and to guarantee the service life and performance of the unit. These two functions can be activated independently.

A reminder message appears on the unit's HMI screen, and stays there until it is acknowledged by the maintenance operator. The information and alert relating to these functions are available on the communication bus to be used on the CMS/BMS.

- The scheduled maintenance reminder: when activated, this function enables the period between two maintenance inspections to be set. This period may be set by the operator in either days, months or hours of operation, depending on the application.
- The compulsory F-GAS sealing test maintenance reminder: when activated, this function, which is the default factory setting, enables the period between two sealing tests to be selected, according to the refrigerant charge, in compliance with the F-GAS regulations.

124

AVAILABLE OPTIONS

Options	Description	Advantages	ILD ST / HE
Corrosion protection, traditional coils	Fins made of pre-treated aluminium (polyurethane and epoxy)	Improved corrosion resistance, recommended for moderate marine and urban environments	●
Low-temperature brine solution	Low temperature chilled water production down to -8°C with ethylene or propylene glycol	Covers specific applications such as ice storage and industrial processes	ILD HE 650-900-1000-1150
Low Noise	Aesthetic and sound absorbing compressor enclosure	Noise level reduction	●
Xtra Low Noise	Acoustic compressor enclosure and low-speed fans	Noise emission reduction at reduced fan speed	HE version, all sizes
Super Low Noise	Acoustic compressor enclosure, low-speed fans and enhanced sound insulation of main noise sources	Noise level reduction for sensitive sites	HE version, all sizes
XtraFan	Unit equipped with specific variable speed fans: XtraFan (see the dedicated chapter to find out the maximum static operating pressure for each size). Each fan is equipped with a connection flange and flexible sleeves enabling connection to the duct system.	Ducted fan discharge, optimised control of the condensing temperature (or evaporating temperature on the heat pump version), based on the operating conditions and system characteristics	HE version, all sizes
IP54 control box	Increased leak tightness of the unit	Protects the inside of the electrical box from dust, water and sand. In general, this option is recommended for installations in polluted environments	●
Protection grilles	Metal grilles on the 4 unit sides.	Improves protection against intrusion to the unit interior, coil and piping protection against impacts.	●
Soft Starter	Electronic starter on each compressor	Reduced start-up current	●
Winter operation down to -20 °C	Fan speed control	Stable operation of the unit when the air temperature is between 0 °C and -20 °C.	ST version, all sizes
Water exchanger frost protection	Electric heater on the water type heat exchanger and the water piping	Water type heat exchanger module frost protection between outdoor air temperatures of 0 °C and -20 °C	●
Water type heat exchanger and hydraulic module frost protection	Electrical heaters on the water type heat exchanger, water pipes, hydraulic module and expansion tank	Water type heat exchanger and hydraulic module frost protection down to an outdoor air temperature of -20 °C	●
Water type heat exchanger and hydraulic module frost protection	Electrical heaters on the water type heat exchanger, water pipes, hydraulic module, expansion tank and water buffer tank module	Water type heat exchanger and hydraulic module frost protection down to an outdoor air temperature of -20 °C	●
Partial heat recovery	Unit equipped with one desuperheater on each refrigerant circuit	Production of free high-temperature hot-water simultaneously with chilled water production (or hot water for Heat pump)	●
Master/slave operation	Unit equipped with supplementary water outlet temperature sensor kit (to be field installed) allowing master/slave operation of two units connected in parallel	Optimised operation of two units connected in parallel operation with operating time equalisation	●
Compressor discharge valves	Shut-off valves on the compressor discharge piping	Simplified maintenance. Possibility to store the refrigerant charge in the condenser side during servicing	●
HP single-pump hydraulic module	Single high pressure water pump, water filter, variable water flow control, pressure sensors. For more details, refer to the dedicated chapter (expansion tank not included. Option with built-in hydraulic safety components available).	Quick, easy installation (plug & play)	●
HP dual-pump hydraulic module	Dual high pressure water pump, water filter, water flow electronic control, pressure sensors. For more details, refer to the dedicated chapter (expansion tank not included. Option with built-in hydraulic safety components available).	Quick, easy installation (plug & play)	●
LP single-pump hydraulic module	Single low pressure water pump, water filter, water flow electronic control, pressure sensors. For more details, refer to the dedicated chapter (expansion tank not included. Option with built-in hydraulic safety components available).	Quick, easy installation (plug & play)	●
LP dual-pump hydraulic module	Dual low pressure water pump, water filter, water flow electronic control, pressure sensors. For more details, refer to the dedicated chapter (expansion tank not included. Option with built-in hydraulic safety components available).	Quick, easy installation (plug & play)	●

● ALL MODELS

Refer to the selection tool to find out which options are not compatible.

125

AVAILABLE OPTIONS

Options	Description	Advantages	ILD ST / HE
HP variable speed single-pump hydraulic module	Single high pressure water pump with variable speed drive, water filter, water flow electronic control, pressure sensors. Multiple water flow control options. For more details, refer to the dedicated chapter (expansion tank not included. Option with built-in hydraulic safety components available).	Quick, easy installation (plug & play), significant reduction in energy consumption for pump use (more than two-thirds), tighter water flow control, improved system reliability	●
HP variable speed dual-pump hydraulic module	Dual high pressure water pump with variable speed drive, water filter, variable water flow control, pressure sensors. Multiple water flow control options. For more details, refer to the dedicated chapter (expansion tank not included. Option with built-in hydraulic safety components available).	Quick, easy installation (plug & play), significant reduction in energy consumption for pump use (more than two-thirds), tighter water flow control, improved system reliability	●
Lon gateway	Bi-directional communication board complying with Lon Talk protocol	Connects the unit by communication bus to a building management system	●
Bacnet over IP	Bi-directional high-speed communication using BACnet protocol over Ethernet network (IP)	Easy and high-speed connection by Ethernet line to a BMS. Allows access to multiple unit parameters	●
Energy Management Module	Control board with additional inputs/outputs. See Contacts available in option on control description.	Extended remote control capabilities (setpoint reset by 0-20 mA input, ice storage end, demand limits, boiler on/off command...)	●
Contact for refrigerant leak detection	0-10 V signal to report any refrigerant leakage in the unit directly on the controller (the leak detector itself must be supplied by the customer)	Immediate customer notification of refrigerant losses to the atmosphere, allowing timely corrective actions	●
Compliance with Russian regulations	EAC certification	Compliance with Russian regulations	●
Power factor correction	Capacitors for automatic regulation of power factor (cos phi) value to 0.95.	Reduction of the apparent electrical power, compliance with minimum power factor limit set by utilities	●
Coil defrost resistance heaters	Electric heaters under the coils and the condensate pans	Prevents frost formation on the coils; compulsory in the heating mode, if the outdoor is below 0°C	●
230V electrical plug	230V AC power supply source provided with plug socket and transformer (180 VA, 0,8 Amps)	Permits connection of a laptop or an electrical device during unit commissioning or servicing	●
Expansion tank	6 bar expansion tank integrated in the hydraulic module	Easy and fast installation (plug & play), & protection of closed water systems from excessive pressure	● with pump
Connection sleeve to be screwed onto the desuperheater	Desuperheater connections with screwed joints	Easy to install. Allows unit connection to a screw connector	●
Desuperheater flexible couplings	Flexible connections on the desuperheater water side	Easy to install. Limit transmission of vibrations on the water network	●
Water buffer tank module	Integrates a water buffer tank module	Avoid short cycle on compressors and ensure a stable water in the loop	● with pump
Anti-vibration mounts	Elastomer anti-vibration mounts to be fitted underneath the unit	Isolate the unit from the building, prevent the transmission of vibrations and associated noise to the building. Must be used in conjunction with a flexible connection on the water side	●
Flexible connection couplings for the exchanger	Flexible connections for the water type heat exchanger	Easy to install. Limits the transmission of vibrations to the water network	●
Desuperheater flexible couplings	Flexible connections on the desuperheater water side	Easy to install. Limit transmission of vibrations on the water network	●
Water filter on the evaporator	Water filter	Prevents fouling in the water network	● no pump
Setpoint adjustable via a 4-20 mA signal	Connections enabling a 4-20 mA signal input	Simplified energy management, enabling the setpoint to be set by a 4-20 mA external signal	●

● ALL MODELS

Refer to the selection tool to find out which options are not compatible.

126

AVAILABLE OPTIONS

Options	Description	Advantages	ILD ST / HE
Evap. single pump power/control circuit	Unit equipped with an electrical power and control circuit for one pump evaporator side	Quick and easy to install: the control for the fixed speed pumps is embedded in the control unit	●
Evap. dual pumps power/control circuit	Unit equipped with an electrical power and control circuit for two pumps evaporator side	Quick and easy to install: the control for the fixed speed pumps is embedded in the control unit	●
M2M supervision (accessory)	Monitoring solution which allows customers to track and monitor their equipment remotely in real time	Real-time expert technical support to increase equipment availability and improve performance.	●

● ALL MODELS

Refer to the selection tool to find out which options are not compatible.

127

TECHNICAL CHARACTERISTICS

AQUACIAT POWER ILD ST				602	650	800	900	902	1000	1150	1200	1400	1600	1800	2000
Heating															
Standard unit Full load performances *	HA1	Nominal capacity	kW	181	198	240	216	272	294	342	359	415	474	457	436
		COP	kW/kW	3,75	3,79	3,81	3,56	3,86	3,75	3,74	3,82	3,72	3,72	3,62	3,57
	HA2	Nominal capacity	kW	174	191	232	245	262	282	329	345	399	456	498	537
		COP	kW/kW	2,99	3,05	3,04	2,91	3,11	2,96	2,98	3,04	2,95	2,97	2,95	2,94
Standard unit Seasonal energy efficiency **	HA1	**SCOP $_{30/35°C}$**	**kW/kW**	**3,20**	**3,21**	**3,23**	**3,21**	**3,20**	**3,22**	**3,21**	**3,20**	**3,30**	**3,35**	**3,34**	**3,32**
		ηs heat $_{30/35°C}$	**%**	**125**	**125**	**126**	**125**	**125**	**126**	**125**	**125**	**129**	**131**	**131**	**130**
		P_{rated}	kW	121	134	159	169	159	194	211	231	268	305	339	356
Cooling															
Standard unit Full load performances *	CA1	Nominal capacity	kW	154	168	201	225	232	264	297	322	372	424	458	510
		EER	kW/kW	2,76	2,87	2,73	2,74	2,89	2,86	2,86	2,87	2,87	2,90	2,75	2,74
		Eurovent class		C	C	C	C	C	C	C	C	C	B	C	C
Standard unit Seasonal energy efficiency **		SEER $_{12/7\ °C}$ Comfort low temp.	kWh/kWh	3,89	3,89	3,93	3,99	3,95	4,03	4,06	4,00	4,04	4,11	4,09	4,04
		SEPR $_{12/7\ °C}$ Process high temp.	kWh/kWh	4,40	4,31	4,41	4,12	4,64	4,77	4,72	5,09	5,03	4,86	4,78	4,58
Part Load integrated values		IPLV.SI	kW/kW	4,320	4,350	4,380	4,370	4,280	4,470	4,410	4,490	4,560	4,610	4,610	4,580
Sound levels															
Standard unit															
Sound power(1)			dB(A)	90	91	91	91	92	92	93	93	94	94	94	94
Sound pressure at 10 m(2)			dB(A)	58	59	59	59	60	60	61	61	62	62	62	62
Unit + Low Noise option															
Sound power(1)			dB(A)	89	90	90	90	91	91	91	92	92	93	93	93
Sound pressure at 10 m(2)			dB(A)	57	58	58	58	59	59	59	60	60	61	61	61
Dimensions															
Length			mm	2410				3604				4797			
Width			mm	2253				2253				2253			
Height			mm	2322				2322				2322			
Unit + Buffer tank module option			mm	3604				4798				5991			
Operating weight (3)															
Standard unit			kg	1443	1518	1646	1669	2090	2257	2382	2613	3094	3344	3356	3396
Unit + Low Noise option			kg	1514	1585	1739	1762	2179	2383	2508	2757	3256	3524	3536	3576
Unit + Low Noise option + HP dual-pump hydraulic module			kg	1704	1748	1913	1936	2398	2630	2763	2998	3538	3806	3855	3894
Unit + Low Noise option + HP dual-pump hydraulic module + Buffer tank module			kg	2652	2692	2857	2880	3338	3589	3722	3957	4497	4765	4814	4853
Compressors				Hermetic Scroll 48.3 r/s											
Circuit A				1	1	2	2	2	2	2	2	3	4	4	4
Circuit B				2	2	2	2	2	3	3	4	4	4	4	4
No. of power stages				3	3	4	4	4	5	5	6	7	8	8	8
Refrigerant (3)				R410A											
Circuit A			kg	14,5	22,0	23,0	24,0	27,0	27,0	30,0	33,0	42,0	53,0	54,0	56,0
			tCO_2e	30,3	45,9	48,0	50,1	56,4	56,4	62,6	68,9	87,7	110,7	112,8	116,9
Circuit B			kg	23,0	23,0	23,0	24,0	35,0	36,0	48,5	53,0	53,0	53,0	54,0	56,0
			tCO_2e	48,0	48,0	48,0	50,1	73,1	75,2	101,3	110,7	110,7	110,7	112,8	116,9

*	In accordance with standard EN14511-3:2013.
**	In accordance with standard EN14825:2016, average climate conditions.
HA1	Heating mode conditions: Water heat exchanger water entering/leaving temperature 30°C/35°C, outside air temperature tdb/twb = 7°C db/6°C wb, evaporator fouling factor 0 m^2. k/W
HA2	Heating mode conditions: Water heat exchanger water entering/leaving temperature 40°C/45°C, outside air temperature tdb/twb = 7°C db/6°C wb, evaporator fouling factor 0 m^2. k/W
CA1	Cooling mode conditions: evaporator water inlet/outlet temperature 12 °C/7 °C, outdoor air temperature 35 °C, evaporator fouling factor 0 m^2. k/W
ηs heat $_{30/35°C}$& SCOP $_{30/35°C}$	**Values in bold comply with Ecodesign Regulation (EU) No. 813/2013 for Heating applications**
SEER $_{12/7°C}$& SEPR $_{12/7°C}$	Values calculated according to EN14825:2016
IPLV.SI	Calculated as per AHRI standard 551-591 (SI).

EUROVENT CERTIFIED PERFORMANCE
www.eurovent-certification.com

Eurovent certified values

TECHNICAL CHARACTERISTICS

AQUACIAT POWER ILD ST		602	650	800	900	902	1000	1150	1200	1400	1600	1800	2000
Oil charge													
Circuit A	l	6,9	6,9	13,8	13,8	13,8	13,8	13,8	13,8	20,7	27,6	27,6	27,6
Circuit B	l	13,8	13,8	13,8	13,8	13,8	20,7	20,7	27,6	27,6	27,6	27,6	27,6
Control		Connect Touch Control											
Minimum capacity	%	33%	33%	25%	25%	25%	20%	20%	17%	14%	13%	13%	13%
Air-cooled exchanger		Grooved copper tubes and aluminium fins (RTPF)											
Fans - Standard unit													
Quantity		3	4	4	4	5	5	6	6	7	8	8	8
Maximum total air flow	l/s	13542	18056	18056	18056	22569	22569	27083	27083	31597	36111	36111	36111
Maximum rotation speed	r/s	16	16	16	16	16	16	16	16	16	16	16	16
Water type heat exchanger		Dual-circuit plate heat exchanger											
Water volume	l	15	15	15	19	27	27	35	44	44	44	47	53
Max. water-side operating pressure without hydraulic module	kPa	1000	1000	1000	1000	1000	1000	1000	1000	1000	1000	1000	1000
Hydraulic module (option)		Pump, Victaulic screen filter, relief valve, water and air vent valve, pressure sensors											
Pump		Centrifugal pump, monocell, 48.3 r/s, low- or high-pressure (as required), single or dual (as required)											
Expansion tank volume (option)	l	50	50	50	50	80	80	80	80	80	80	80	80
Water buffer tank module volume (option)	l	550	550	550	550	550	550	550	550	550	550	550	550
Max. water-side operating pressure with hydraulic module	kPa	400	400	400	400	400	400	400	400	400	400	400	400
Water connections with / without hydraulic module		Victaulic® type											
Diameter	inch	3	3	3	3	4	4	4	4	4	4	4	4
External diameter	mm	88,9	88,9	88,9	88,9	114,3	114,3	114,3	114,3	114,3	114,3	114,3	114,3
Casing paint		Colour code RAL 7035/RAL 7024											

129

TECHNICAL CHARACTERISTICS

AQUACIAT POWER ILD HE				602	650	800	900	902	1000	1150	1200	1400	1600	1800	2000
Heating															
Standard unit Full load performances *	HA1	Nominal capacity	kW	181	198	240	216	272	294	342	359	415	474	457	436
		COP	kW/kW	3,75	3,79	3,81	3,56	3,86	3,75	3,74	3,82	3,72	3,72	3,62	3,57
	HA2	Nominal capacity	kW	174	191	232	245	262	282	329	345	399	456	498	537
		COP	kW/kW	2,99	3,05	3,04	2,91	3,11	2,96	2,98	3,04	2,95	2,97	2,95	2,94
Standard unit Seasonal energy efficiency **	HA1	**SCOP 30/35 °C**	**kW/kW**	**3,38**	**3,38**	**3,39**	**3,39**	**3,38**	**3,39**	**3,41**	**3,40**	**3,43**	**3,46**	**3,47**	**3,41**
		ηs heat 30/35°C	**%**	**132**	**132**	**133**	**133**	**132**	**132**	**133**	**133**	**134**	**135**	**136**	**134**
		P_{rated}	kW	121	134	159	169	159	194	211	231	268	305	339	356
Cooling															
Standard unit Full load performances *	CA1	Nominal capacity	kW	154	168	201	225	232	264	297	322	372	424	458	510
		EER	kW/kW	2,76	2,87	2,73	2,74	2,89	2,86	2,86	2,87	2,87	2,90	2,75	2,74
		Eurovent class		C	C	C	C	C	C	C	C	C	B	C	C
Standard unit Seasonal energy efficiency **		SEER 12/7 °C Comfort low temp.	kWh/kWh	4,07	4,08	4,09	4,13	4,16	4,21	4,16	4,23	4,32	4,33	4,30	4,22
		SEPR 12/7 °C Process high temp.	kWh/kWh	5,24	5,29	5,29	5,16	5,13	5,39	5,52	5,45	5,56	5,64	5,40	5,18
Unit + low temperature brine solution option Seasonal energy efficiency **		**SEPR -2/-8°C Process medium temp. *** **	**kWh/kWh**	NA	**3,55**	NA	**3,47**	NA	**3,36**	**3,67**	NA	NA	NA	NA	NA
Part Load integrated values		IPLV.SI	kW/kW	4,560	4,630	4,670	4,660	4,620	4,670	4,840	4,690	4,780	4,880	4,850	4,740
Sound levels															
Standard unit															
Sound power(1)			dB(A)	90	91	91	91	92	92	93	93	94	94	94	94
Sound pressure at 10 m(2)			dB(A)	58	59	59	59	60	60	61	61	62	62	62	62
Unit + Low Noise option															
Sound power(1)			dB(A)	89	90	90	90	91	91	91	92	92	93	93	93
Sound pressure at 10 m(2)			dB(A)	57	58	58	58	59	59	59	60	60	61	61	61
Unit + Xtra Low Noise option															
Sound power(1)			dB(A)	84	85	86	86	86	87	87	87	88	89	89	89
Sound pressure at 10 m(2)			dB(A)	52	53	54	54	54	55	55	55	56	57	57	57
Unit + Super Low Noise option															
Sound power(1)			dB(A)	82	83	84	84	84	85	85	86	86	87	87	87
Sound pressure at 10 m(2)			dB(A)	50	51	52	52	52	53	53	54	54	55	55	55
Dimensions															
Length			mm	2410				3604				4797			
Width			mm	2253				2253				2253			
Height			mm	2322				2322				2322			
Unit + Buffer tank module option			mm	3604				4798				5991			
Operating weight (3)															
Standard unit			kg	1479	1554	1683	1705	2127	2274	2396	2626	3104	3370	3382	3432
Unit + Low Noise option			kg	1550	1622	1775	1798	2215	2400	2499	2747	3239	3520	3532	3612
Unit + Low Noise option + HP dual-pump hydraulic module			kg	1717	1785	1950	2003	2395	2648	2731	3012	3494	3771	3820	3929
Unit + Low Noise option + HP dual-pump hydraulic module + Buffer tank module			kg	2664	2728	2894	2946	3335	3588	3667	3948	4426	4699	4748	4858

*	In accordance with standard EN14511-3:2013.
**	In accordance with standard EN14825:2016, average climate conditions.
***	30 % brine solution
HA1	Heating mode conditions: Water heat exchanger water entering/leaving temperature 30°C/35°C, outside air temperature tdb/twb = 7°C db/6°C wb, evaporator fouling factor 0 m^2. k/W
HA2	Heating mode conditions: Water heat exchanger water entering/leaving temperature 40°C/45°C, outside air temperature tdb/twb = 7°C db/6°C wb, evaporator fouling factor 0 m^2. k/W
CA1	Cooling mode conditions: evaporator water inlet/outlet temperature 12 °C/7 °C, outdoor air temperature 35 °C, evaporator fouling factor 0 m^2. k/W
ηs heat 30/35°C & SCOP 30/35°C	**Values in bold comply with Ecodesign Regulation (EU) No. 813/2013 for Heating applications**
SEER 12/7°C & SEPR 12/7°C	Values calculated according to EN14825:2016
SEPR -2/-8°C	**Values in bold comply with Ecodesign Regulation (EU) No. 2015/1095 for Process application**
NA	Not authorised for the specific application for the EEC market
IPLV.SI	Calculated as per AHRI standard 551-591 (SI).

EUROVENT CERTIFIED PERFORMANCE
www.eurovent-certification.com

Eurovent certified values

TECHNICAL CHARACTERISTICS

AQUACIAT POWER ILD HE		602	650	800	900	902	1000	1150	1200	1400	1600	1800	2000
Compressors		Hermetic Scroll 48.3 r/s											
Circuit A		1	1	2	2	2	2	2	2	3	4	4	4
Circuit B		2	2	2	2	2	3	3	4	4	4	4	4
No. of power stages		3	3	4	4	4	5	5	6	7	8	8	8
Refrigerant (3)		R410A											
Circuit A	kg	14,5	22	23	24	27	27	30	33	42	53	54	56
Circuit B	tCO_2e	30,3	45,9	48	50,1	56,4	56,4	62,6	68,9	87,7	110,7	112,8	116,9
Circuit B	kg	23	23	23	24	35	36	48,5	53	53	53	54	56
No. of power stages	tCO_2e	48	48	48	50,1	73,1	75,2	101,3	110,7	110,7	110,7	112,8	116,9
Oil charge													
Circuit A	l	6,9	6,9	13,8	13,8	13,8	13,8	13,8	13,8	20,7	27,6	27,6	27,6
Circuit B	l	13,8	13,8	13,8	13,8	13,8	20,7	20,7	27,6	27,6	27,6	27,6	27,6
Control		Connect Touch Control											
Minimum capacity	%	33%	33%	25%	25%	25%	20%	20%	17%	14%	13%	13%	13%
Air-cooled exchanger		Grooved copper tubes and aluminium fins (RTPF)											
Fans													
Quantity		3	4	4	4	5	5	6	6	7	8	8	8
Maximum total air flow	l/s	13542	18056	18056	18056	22569	22569	27083	27083	31597	36111	36111	36111
Maximum rotation speed	r/s	16	16	16	16	16	16	16	16	16	16	16	16
Water type heat exchanger		Dual-circuit plate heat exchanger											
Water volume	l	15	15	15	19	27	27	35	44	44	44	47	53
Max. water-side operating pressure without hydraulic module	kPa	1000	1000	1000	1000	1000	1000	1000	1000	1000	1000	1000	1000
Hydraulic module (option)		Pump, Victaulic screen filter, relief valve, water and air vent valve, pressure sensors											
Pump		Centrifugal pump, monocell, 48.3 r/s, low or high pressure (as required), single or dual (as required)											
Expansion tank volume (option)	l	50	50	50	50	80	80	80	80	80	80	80	80
Water buffer tank module volume (option)	l	550	550	550	550	550	550	550	550	550	550	550	550
Max. water-side operating pressure with hydraulic module	kPa	400	400	400	400	400	400	400	400	400	400	400	400
Water connections with / without hydraulic module		Victaulic® type											
Diameter	inch	3	3	3	3	4	4	4	4	4	4	4	4
External diameter	mm	88,9	88,9	88,9	88,9	114,3	114,3	114,3	114,3	114,3	114,3	114,3	114,3
Casing paint		Colour code RAL 7035/RAL 7024											

ELECTRICAL DATA

Basic unit (excluding pump)

AQUACIATPOWER ILD ST		602	650	800	900	902	1000	1150	1200	1400	1600	1800	2000
Power circuit													
Nominal voltage	V-ph-Hz	400 - 3 -50											
Voltage range	V	360 - 440											
Control circuit supply		24 V, via internal transformer											
Nominal unit current draw(1)													
Circuit A&B	A	100	110	124	133	161	180	201	221	242	261	282	322
Max. operating input power(2)													
Circuit A&B	kW	80	88	99	107	129	145	161	177	194	210	226	258
Cosine Phi unit at maximum power (2)		0,88	0,87	0,87	0,88	0,88	0,88	0,88	0,88	0,88	0,88	0,88	0,88
Maximum unit current draw (Un-10%)(3)													
Circuit A&B	A	144	158	176	192	230	259	288	317	345	374	403	460
Maximum unit current draw (Un)(4)													
Circuit A&B - Standard unit	A	133	146	163	177	212	239	266	292	319	345	372	425
Circuit A&B - Unit + Power factor corrector option	A	100	110	125	133	163	181	204	222	244	262	285	326
Maximum start-up current, standard unit (Un)(5)													
Circuit A&B	A	307	356	374	352	423	450	476	503	529	556	583	636
Maximum start-up current, unit with soft starter (Un)(5)													
Circuit A&B	A	261	283	300	305	349	376	403	429	456	482	509	562

(1) Conditions equivalent to the standardised Eurovent conditions (water type heat exchanger water input/output temperature = 12 °C/7 °C, outdoor air temperature = 35 °C).
(2) Power input, compressors + fans, at the unit operating limits (saturated suction temperature: 15 °C, saturated condensation temperature 68.3 °C) and nominal voltage of 400 V (data given on the unit's nameplate).
(3) Maximum unit operating current at maximum unit power input and 360 V.
(4) Maximum unit operating current at maximum unit input power and 400 V (data given on the unit's name plate).
(5) Maximum instantaneous starting current at the operating limits (maximum operating current of the smallest compressor(s) + current of the fan(s) + locked rotor current of the largest compressor).
Fan motor electrical data at Eurovent equivalent conditions and motor ambient air temperature of 50 °C at 400 V: current 3.8 A, starting current 20 A, input power: 1.75 kW.

AQUACIATPOWER ILD HE		602	650	800	900	902	1000	1150	1200	1400	1600	1800	2000
Power circuit													
Nominal voltage	V-ph-Hz	400 - 3 -50											
Voltage range	V	360 - 440											
Control circuit supply		24 V, via internal transformer											
Nominal unit current draw(1)													
Circuit A&B	A	97	107	121	130	158	176	197	216	237	255	276	316
Max. operating input power(2)													
Circuit A&B	kW	81	88	99	108	129	145	162	178	194	210	226	259
Cosine Phi unit at maximum power (2)		0,88	0,88	0,88	0,88	0,88	0,88	0,88	0,88	0,88	0,88	0,88	0,88
Maximum unit current draw (Un-10%)(3)													
Circuit A&B	A	142	154	173	189	227	255	284	312	340	369	397	454
Maximum unit current draw (Un)(4)													
Circuit A&B - Standard unit	A	131	142	160	174	209	235	262	287	314	340	366	419
Circuit A&B - Unit + Power factor correction option	A	98	108	123	131	161	178	201	219	241	259	281	321
Maximum start-up current, standard unit (Un)(5)													
Circuit A&B	A	305	353	371	349	420	446	472	498	525	550	577	629
Maximum start-up current, unit with soft starter (Un)(5)													
Circuit A&B	A	259	279	297	302	346	372	399	424	451	477	503	556

(1) Conditions equivalent to the standardised Eurovent conditions (water type heat exchanger water input/output temperature = 12 °C/7 °C, outdoor air temperature = 35 °C).
(2) Power input, compressors + fans, at the unit operating limits (saturated suction temperature: 15 °C, saturated condensation temperature: 68.3 °C) and nominal voltage of 400 V (data given on the unit's name plate).
(3) Maximum unit operating current at maximum unit power input and 360 V.
(4) Maximum unit operating current at maximum unit input power and 400 V (data given on the unit's name plate).
(5) Maximum instantaneous starting current at the operating limits (maximum operating current of the smallest compressor(s) + current of the fan(s) + locked rotor current of the largest compressor).
Fan motor electrical data reported upstream of the variable drive at Eurovent equivalent conditions and motor ambient air temperature of 50 °C at 400 V: Current 3.0 A; Starting current 20 A; Power input: 1.75 kW.

ELECTRICAL DATA

Short circuit current withstand capability (TN system(1))

AQUACIATPOWER ILD ST / HE	602	650	800	900	902	1000	1150	1200	1400	1600	1800	2000
Value without upstream protection												
Short time (1s) assigned current - Icw - kA eff	8	8	8	8	8	8	15	15	15	15	20	20
Allowable peak assigned current - Ipk - kA pk	30	30	30	30	30	30	65	65	65	65	80	80
Value with upstream protection												
Protection type: Fuse												
Rated conditional short circuit current Icc or Icf - kA eff	50	50	50	50	50	50	50	50	50	50	50	50
Assigned gL/gG fuses	200	200	200	250	250	250	315	315	400	400	630	630

(1) Type of system earthing

133

Dimensions

■ AQUACIAT POWER ILD ST-HE 602 to 900 Without buffer tank

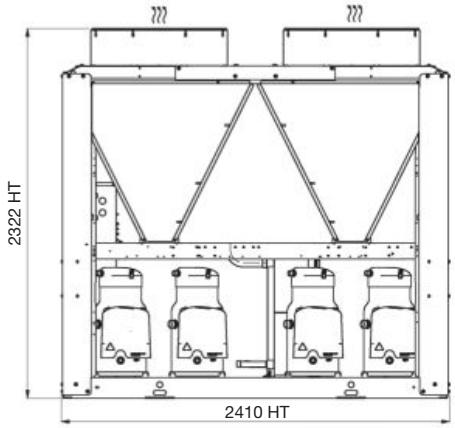

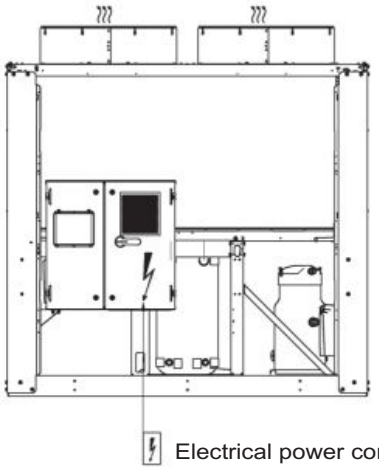

Hydraulic connection
Partial heat recovery

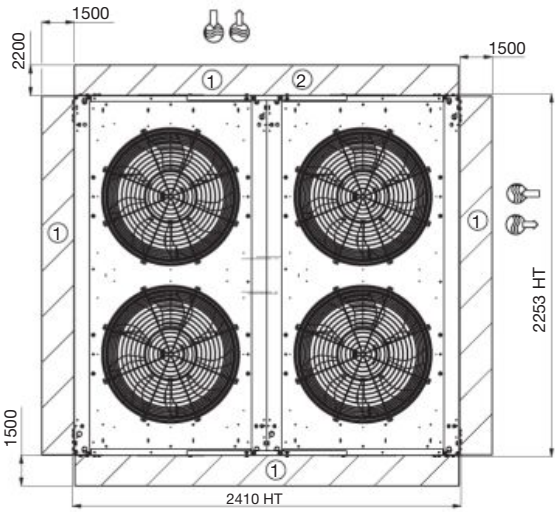

Main hydraulic connection

Key
All dimensions in mm

- (1) Clearance required for maintenance and air flow
- (2) Clearances recommended for removal of the coils
- Water inlet
- Water outlet
- Air outlet, do not obstruct
- Electrical cabinet

Notes:
Non-contractual drawings.

When designing a system, refer to the certified dimensional drawings provided with the unit or available on request.

Please refer to the certified dimensional drawings for the positioning of the fixing points, weight distribution points and centre of gravity coordinates.

Dimensions

■ AQUACIAT POWER ILD ST-HE 602 to 900 With buffer tank

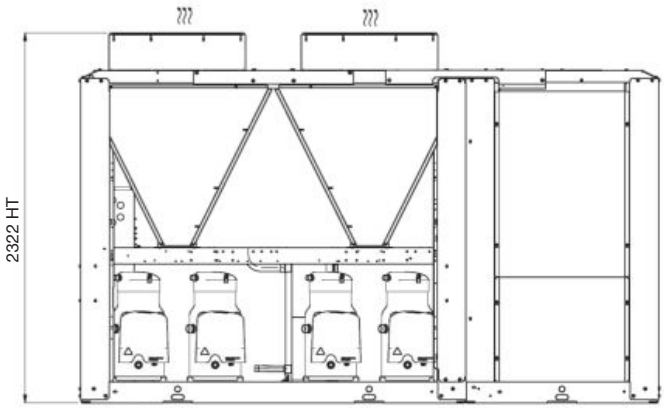

Main hydraulic connection

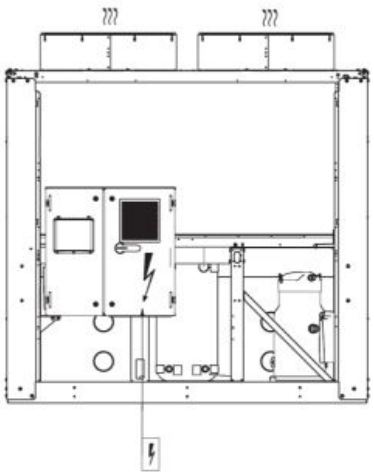

Electrical power connection

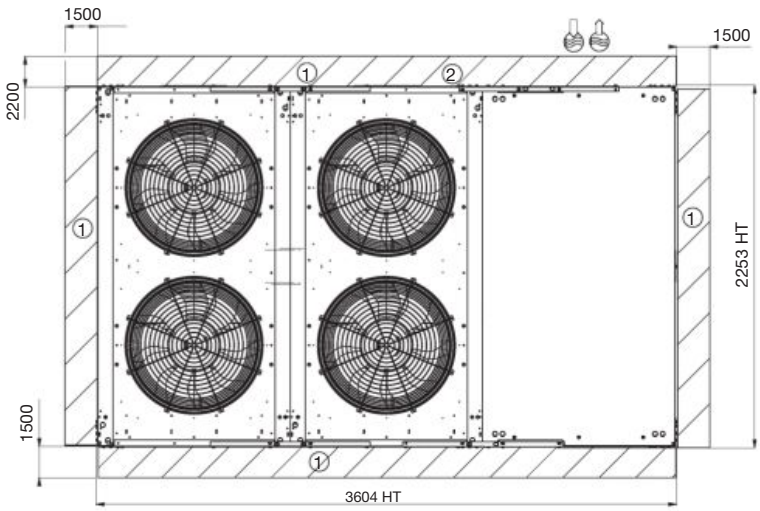

Key
All dimensions in mm

- (1) Clearance required for maintenance and air flow
- (2) Clearances recommended for removal of the coils
- Water inlet
- Water outlet
- Air outlet, do not obstruct
- Electrical cabinet

Notes:
Non-contractual drawings.

When designing a system, refer to the certified dimensional drawings provided with the unit or available on request.

Please refer to the certified dimensional drawings for the positioning of the fixing points, weight distribution points and centre of gravity coordinates.

Dimensions

■ AQUACIAT POWER ILD ST-HE 902 to 1200 Without buffer tank

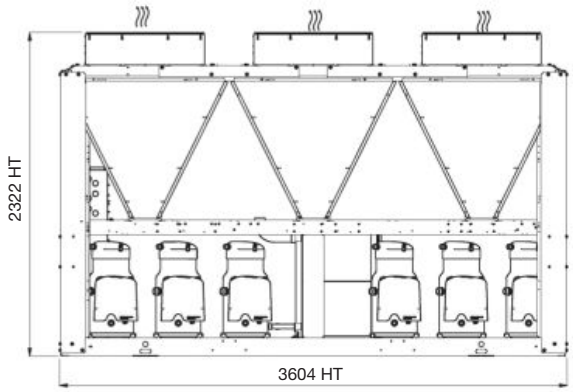

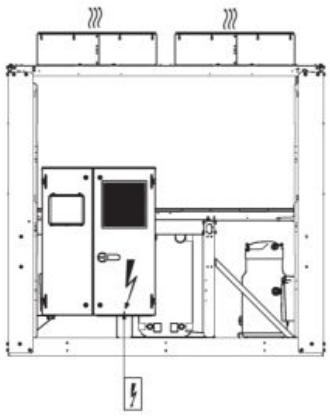

Electrical power connection

Hydraulic connection
Partial heat recovery

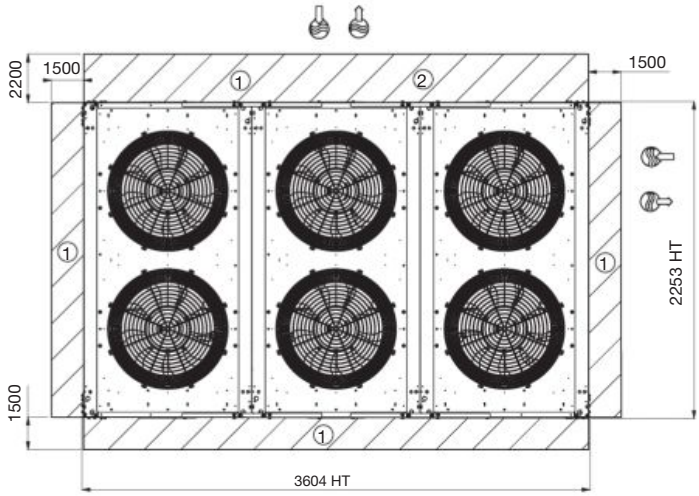

Main hydraulic connection

Key
All dimensions in mm

- (1) Clearance required for maintenance and air flow
- (2) Clearances recommended for removal of the coils
- Water inlet
- Water outlet
- Air outlet, do not obstruct
- Electrical cabinet

Notes:
Non-contractual drawings.

When designing a system, refer to the certified dimensional drawings provided with the unit or available on request.

Please refer to the certified dimensional drawings for the positioning of the fixing points, weight distribution points and centre of gravity coordinates.

Dimensions

■ AQUACIAT POWER ILD ST-HE 902 to 1200 With buffer tank

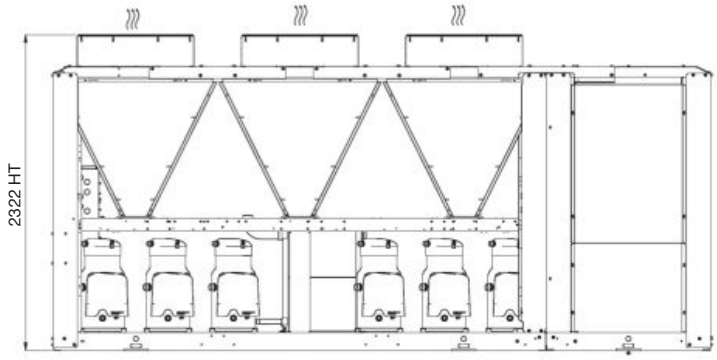

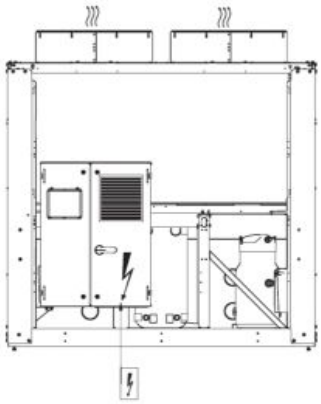

Electrical power connection

Main hydraulic connection

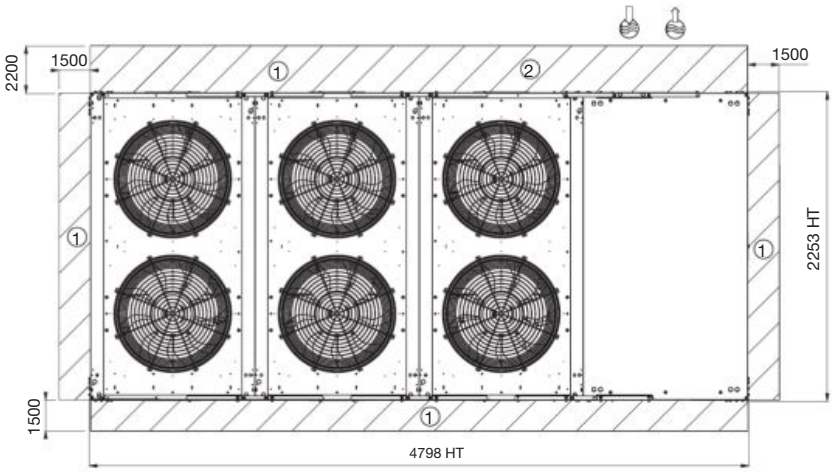

Key
All dimensions in mm

- (1) Clearance required for maintenance and air flow
- (2) Clearances recommended for removal of the coils
- Water inlet
- Water outlet
- Air outlet, do not obstruct
- Electrical cabinet

Notes:
Non-contractual drawings.

When designing a system, refer to the certified dimensional drawings provided with the unit or available on request.

Please refer to the certified dimensional drawings for the positioning of the fixing points, weight distribution points and centre of gravity coordinates.

Dimensions

■ AQUACIAT POWER ILD ST-HE 1400 to 2000 Without buffer tank

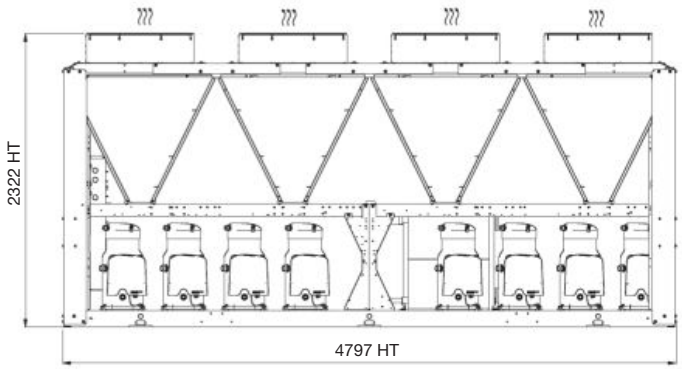

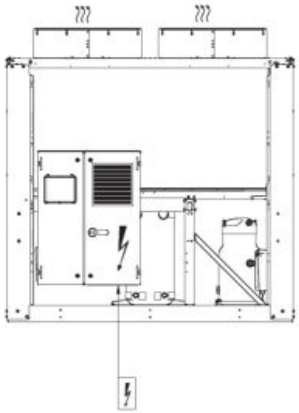

Electrical power connection

Hydraulic connection
Partial heat recovery

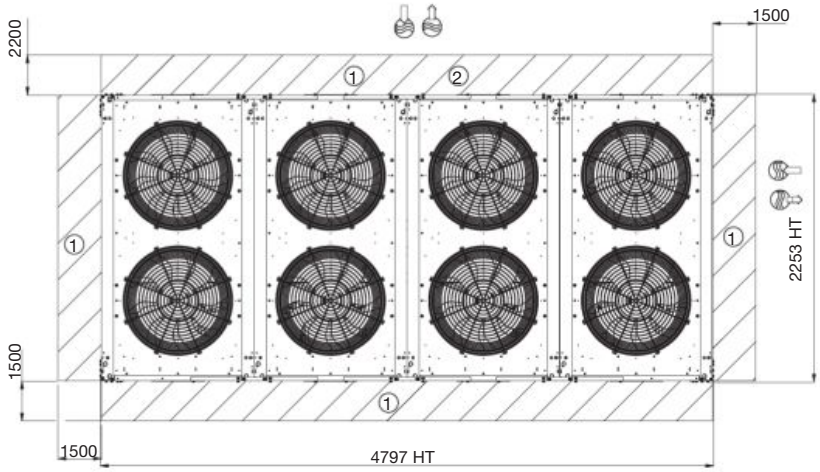

Main hydraulic connection

Key
All dimensions in mm

- (1) Clearance required for maintenance and air flow
- (2) Clearances recommended for removal of the coils
- Water inlet
- Water outlet
- Air outlet, do not obstruct
- Electrical cabinet

Notes:
Non-contractual drawings.

When designing a system, refer to the certified dimensional drawings provided with the unit or available on request.

Please refer to the certified dimensional drawings for the positioning of the fixing points, weight distribution points and centre of gravity coordinates.

Dimensions

■ AQUACIAT POWER ILD ST-HE 1400 to 2000 With buffer tank

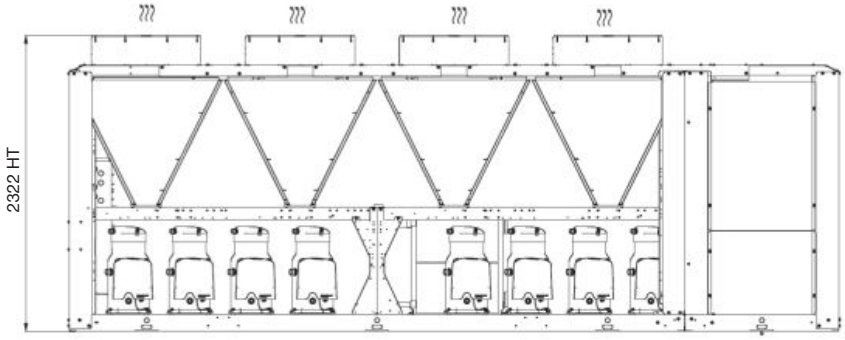

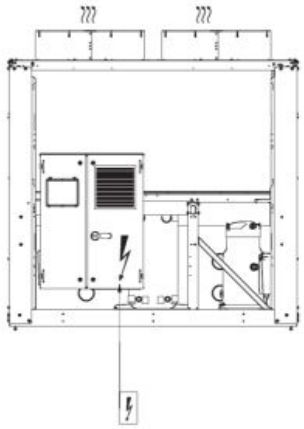

Main hydraulic connection

Electrical power connection

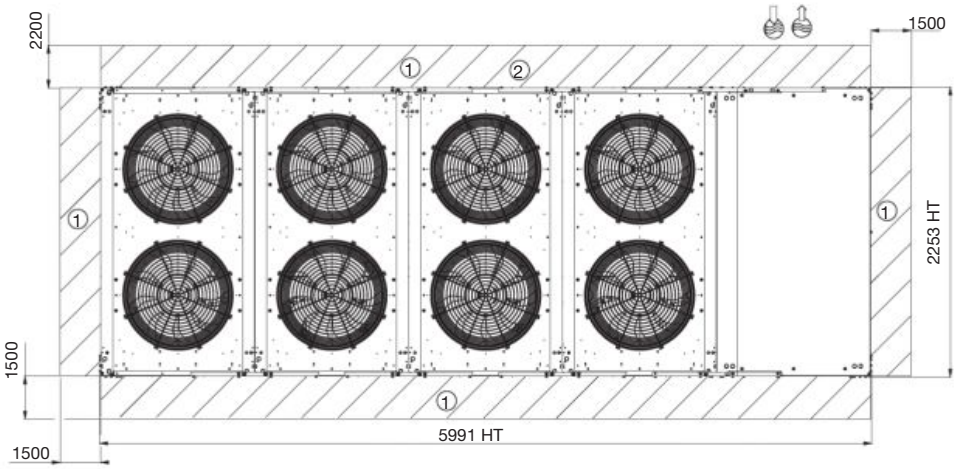

Key
All dimensions in mm

- (1) Clearance required for maintenance and air flow
- (2) Clearances recommended for removal of the coils
- Water inlet
- Water outlet
- Air outlet, do not obstruct
- Electrical cabinet

Notes:
Non-contractual drawings.

When designing a system, refer to the certified dimensional drawings provided with the unit or available on request.

Please refer to the certified dimensional drawings for the positioning of the fixing points, weight distribution points and centre of gravity coordinates.

POWERCIAT LX

Water chillers

Energy excellence !

Eurovent-certified class A EER
SEER up to 4.5, SEPR up to 6.3
Operating range from -20 °C to +55 °C
Compact and silent
High-efficiency flooded shell and tube evaporator
Aluminium micro-channel condenser
Hydraulic module & heat recovery

Cooling capacity : 273 à 1493 kW

Cooling only | **Hydraulic module** | **Heat recovery**

Use

The latest generation of **POWERCIAT** high-efficiency air-towater water chillers are the perfect solution for all cooling applications in the Offices, Healthcare, Industry, Administration, Shopping Centres and Collective Housing markets.

These units are designed for outdoor installation and require no special protection against adverse weather conditions.

POWERCIAT is optimised to use ozone-friendly HFC R134a refrigerant.

This range guarantees compliance with the most demanding requirements for increased seasonal energy efficiency (SEER and SEPR) and CO_2 reduction to comply with the various applicable European directives and regulations.

Range

■ POWERCIAT series LX ST

Standard cooling only version.

The product is optimised to meet the most demanding technical and economic requirements, as well as fulfilling the provisions of the new Ecodesign regulation governing process applications.

■ POWERCIAT series LX XE

Premium cooling only version.

The product is optimised for part load applications and fulfils the provisions of the new Ecodesign regulation governing comfort and process applications, while also facilitating a return on investment. In this case, the machine is equipped with ECtype variable-speed fans as standard, enabling the optimum part load efficiency to be achieved throughout the year

■ POWERCIAT series LX HE

Cooling only version High seasonal energy efficiency.

The product is optimised for part load applications and fulfils the provisions of the new Ecodesign regulation governing comfort and process applications. In this case, the machine is equipped as standard with variable-speed fans with AC motor and external speed regulator, allowing for optimisation of the part load efficiency throughout the year.

DESCRIPTION

POWERCIAT units are packaged machines supplied as standard with the following components:

- Twin-screw semi-hermetic compressors
- Flooded shell and tube type chilled-water evaporator
- Air-cooled exchanger, all-aluminium micro-channel coil with axial fan motor assembly
- Electrical power and remote control cabinet:
  - 400 V-3ph-50 Hz (+/-10 %) mains power supply + earth
  - transformer fitted as standard on the machine for supplying the remote control circuit with 24 V
- Connect Touch electronic control module
- Casing for outdoor installation

The entire POWERCIAT range complies with the following EC directives and standards:

- Machinery directive 2006/42/EC.
- Electromagnetic compatibility directive 2014/30/EU.
- EMC immunity and emissions EN 61800-3 'C3'
- Low voltage directive 2014/35/EU.
- RoHS 2011/65/EU
- Pressure equipment directive (PED) 2014/68/EU
- Machinery directive EN 60-204 - 1
- Refrigeration systems and heat pumps EN 378-2
- Regulation (EU) no. 2016/2281 implementing directive 2009/125/EC with regard to Ecodesign requirements

DESCRIPTION

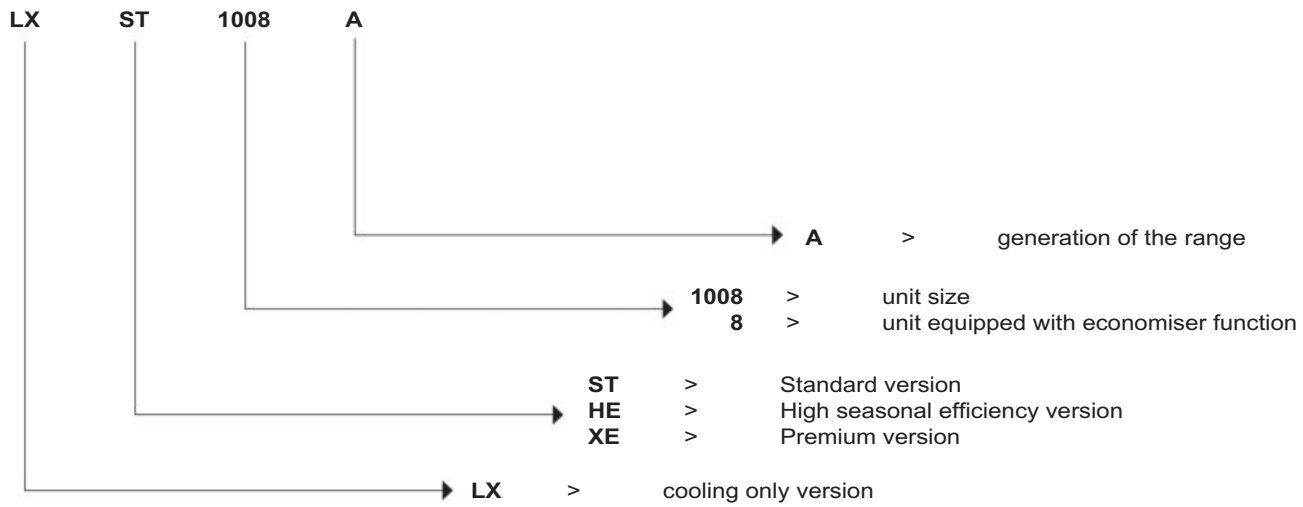

CONFIGURATION

ST	Standard	**HE**	High Seasonal Efficiency
ST Option LN	Standard Low Noise	**HE LN option**	High Seasonal Efficiency Low Noise
ST Option XLN	Standard Xtra Low Noise	**HE XLN option**	High Seasonal Efficiency Xtra Low Noise
ST Option SLN	Standard Super Low Noise	**HE SLN option**	High Seasonal Efficiency Super Low Noise

XE	Premium
XE Option LN	Premium Low Noise
XE Option XLN	Premium Xtra Low Noise

Description of the main components

Compressors
- Twin-screw semi-hermetic type
- 2 screws fitted on ball and roller bearings
- Continuous power control
- Built-in electric motor, cooled by intake gases
- Integral electronic protection of the motor against thermal and electrical overloads
- Monitoring of rotation direction, absence of phase, over and under voltage, and power supply failure
- Monitoring of lubrication under differential pressure
- Built-in oil filter
- Internal pressure surge valve and valve to prevent reverse rotation during shutdown phases
- Monitoring of maximum head pressure
- Oil separator with integrated silencer to reduce pulses from the discharged gas
- Star-delta start limiting the in-rush current

Shell and tube evaporator
- High performance glandless technology
- Copper tube bundle with internal and external grooves
- 19-mm thermal insulation
- Victaulic type coupling
- Maximum pressure, water side, of 10 bar **(21 bar as option)**

Condenser
- air-cooled exchanger, all-aluminium micro-channel coil
- propeller fans with composite blades offering an optimised profile, fixed speed (ST version) or variable speed (HE and XE versions)
- motors – IP 54, class F

Refrigerating accessories
- Dehumidifier filters with rechargeable cartridges
- hygroscopic sight glasses
- electronic expansion valves
- service valves on the liquid line

Control and safety instruments
- low and high pressure sensors
- safety valves on refrigerant circuit
- water temperature control sensors
- evaporator antifreeze protection sensor
- factory-fitted evaporator water flow controller

Electrical cabinet
- Electrical cabinet protection rating: IP 44 (IP 54 optional)
- A connection point without neutral for sizes 808 to 3028
- Two connection points without neutral for sizes 3428 to 4608 (one connection point optional)
- front-mounted main safety switch with handle
- control circuit transformer
- 24 V control circuit
- fan and compressor motor circuit breaker
- fan and compressor motor contactors
- Connect Touch microprocessor-controlled electronic control module
- wire numbering
- marking of the main electrical components

Chassis
Frame made from RAL 7035 light grey & RAL 7024 graphite grey painted panels

Connect Touch control module
- User interface with 5-inch touchscreen
- Intui t ive, user - f r iendly navigation using icons
- Clear text display of information available in 9 languages (F-GBD- NL-E-I-P-RU +Chinese)

The electronic control module performs the following main functions:
- regulation of the chilled water temperature (at the return or at the outlet)
- regulation of the water temperature based on the outdoor temperature (water law)
- regulation for low temperature energy storage
- second setpoint management
- complete management of compressors with start-up sequence, timer and operating time balancing
- self-regulating and proactive functions with adjustment of the control to counter parameter drift
- i n-series staged power control system on the compressors according to the thermal requirements
- management of compressor short-cycle protection
- frost protection (exchanger heater option)
- phase reversal protection
- management of occupied/unoccupied modes (according to the time schedule)
- compressor and pump operating time balancing
- management of the machine operating limit according to outdoor temperature
- sound level reduction device (night mode according to the user programme) with limitation of compressor capacity and fan speed
- diagnosis of fault and operating statuses
- management of a fault memory allowing a log of the last 50 incidents to be accessed, with operating readings taken when the fault occurs
- Blackbox memory
- master/slave management of the two machines in parallel with operating time balancing and automatic changeover if a fault occurs on one machine
- weekly and hourly time schedule for the machine, including 16 periods of absence
- pump standby based on demand (energy saving)
- calculation of the water flow rate and operating pressure (hydraulic module version)
- display of all machine parameters (3 access levels, User/Maintenance/Factory, password-protected): temperature, setpoints, pressures, water flow rate (hydraulic version), runtime.
- display of trend curves for the main values
- storage of maintenance manual, wiring diagram and spare parts list.

Description of the main components

Remote management

Connect Touch is equipped as standard with an RS485 port and an ETHERNET (IP) connection, offering a range of options for remote management, monitoring and diagnostics.

Using the integrated Webserver, a simple internet connection uses the unit's IP address to access the Connect Touch interface on the PC, facilitating everyday management tasks and maintenance operations.

A range of communication protocols are available: MODBUS/JBUS RTU (RS485) or TC/IP as standard, LONWORKS – BACNET IP as an option, enabling most CMS/BMS to be integrated

Several contacts are available as standard, enabling the machine to be controlled remotely by wired link:
- automatic operation control: when this contact is open, the machine stops
- setpoint 1/setpoint 2 selector: when this contact is closed, a second cooling setpoint is activated (energy storage or unoccupied mode, for example)
- Power limitation: closing the contact concerned allows the power or refrigerating consumption of the machine to be limited by stopping one or more compressors (this limit can be set with a parameter)
- fault reporting: this contact indicates the presence of a major fault which has caused one or both refrigerant circuits to stop
- operational status reporting indicates that the unit is in production mode.
- switch control for the customer pump, external to the machine (on/off).

Contacts available as an option:
- setpoint adjustable via 4-20 mA signal: this input is used to adjust the setpoint in COOLING mode
- power limitation adjustable by 4-20 mA signal
- Second power limitation level
- Power indication: analogue output (0-10 V) providing an indication of the unit's load rate.
- user fault reporting, enables integration of a fault in the water loop
- general fault reporting: this contact indicates that the unit has stopped completely
- alert reporting: this contact indicates the presence of a minor fault which did not cause the refrigerant circuit in question to stop.
- End of storage signal: enables return to the second setpoint at the end of the storage cycle
- Schedule override: closing this contact cancels the time schedule.

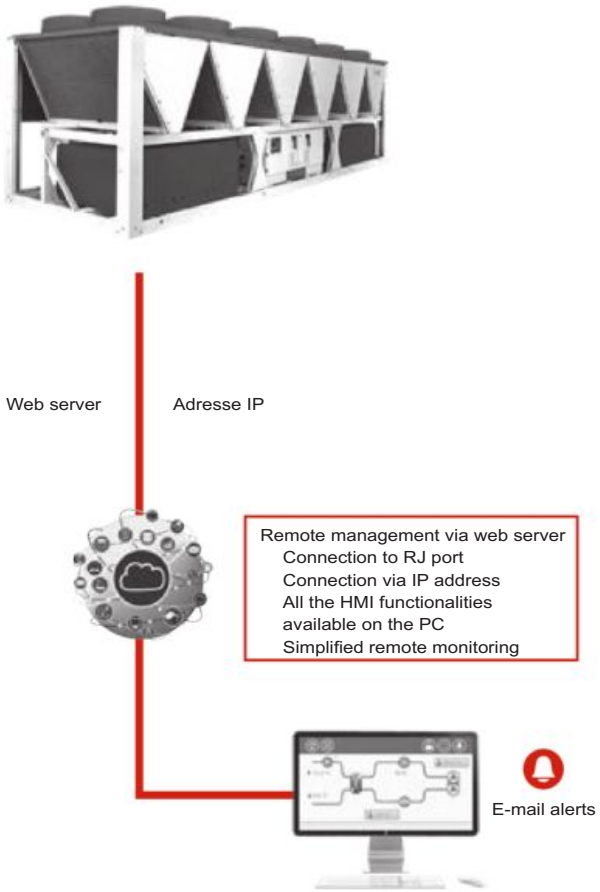

Maintenance

Connect Touch has two maintenance reminder functions as standard, making users aware of the need to regularly perform maintenance operations and to guarantee the service life and performance of the unit. These two functions can be activated independently.

A reminder message appears on the unit's HMI screen, and stays there until it is acknowledged by the maintenance operator.

The information and alert relating to these functions are available on the communication bus to be used on the CMS/BMS.

- the scheduled maintenance reminder: when activated, this function enables the period between two maintenance inspections to be set. This period may be set by the operator in either days, months or operating hours, depending on the application.
- the compulsory F-GAS sealing test maintenance reminder: when activated, this function, which is the default factory setting, enables the period between two sealing tests to be selected, according to the unit's refrigerant charge, in compliance with the F-GAS regulations.

AVAILABLE OPTIONS

Options	Description	Advantages	LX ST/HE/XE
Medium-temperature brine solution	Implementation of new algorithms of control and evaporator redesign to allow chilled brine solution production down to -6°C when ethylene glycol is used (-3°C with propylene glycol)	Covers specific applications such as ice storage and industrial processes	•
Low-temperature brine solution	Implementation of new algorithms of control and evaporator redesign to allow chilled brine solution production down to -12°C when ethylene glycol is used (-8°C with propylene glycol)	Covers specific applications such as ice storage and industrial processes	•
Light-brine solution, down to -3°C	Implementation of new algorithms of control to allow chilled brine solution production down to -3°C when ethylene glycol is used (0°C with propylene glycol)	Matches with most application requirements for ground-sourced heat pumps and fits with many industrial processes requirements	•
Unit equipped for air discharge ducting	Fans equipped with discharge connection flanges - maximum available pressure 60 Pa	Facilitates connections to the discharge ducts	•
Low Noise	Aesthetic and sound absorbing compressor enclosure	Noise level reduction	•
Xtra Low Noise	Acoustic compressor enclosure and low-speed fans	Noise emission reduction at reduced fan speed	•
Super Low Noise	Acoustic compressor enclosure, low-speed fans and enhanced sound insulation of main noise sources	Noise level reduction in sensitive environments	ST/HE version sizes 1308 to 4608
IP54 control box	Increased leak tightness of the unit	Protects the inside of the electrical box from dust, water and sand. As a rule, this option is recommended for installations located in polluted environments	•
Tropicalisation of the electrical box	Electrical box equipped with an electrical heater and a fan. Electrical connections on the compressors painted with a special varnish.	Grant safe operation in typical "tropical" climate. This option is recommended for all applications where humidity inside the electrical box can reach 80% at 40°C and unit can remain in stand-by for a long time under this conditions.	•
Protection grilles	Metal grilles on the 4 unit sides.	Improves protection against intrusion to the unit interior, and protects the coil and piping against impacts.	•
Winter operation down to -20 °C	Fan speed control via frequency converter	Stable unit operation for air temperature down to -20 °C	ST version, all sizes
230 V electrical plug	230 V AC power supply source provided with plug socket and transformer (180 VA, 0.8 A)	Permits connection of a laptop or an electrical device during unit commissioning or servicing	•
Water exchanger frost protection	Electric resistance heater on the water exchanger and discharge valve	Water exchanger frost protection down to -20°C outside temperature	•
Evaporator & hydraulic module frost protection	Electric resistance heater on water exchanger, discharge valve and hydraulic module	Water exchanger and hydraulic module frost protection down to -20°C outside temperature	Sizes 808 to 1528
Total heat recovery	Unit equipped with additional heat exchanger in parallel with the condenser coils.	Production of free hot-water simultaneously with chilled water production	Sizes 808 to 3028
Evaporator with one pass less	Evaporator with one pass on the water side. Evaporator inlet and outlet on opposite sides.	Easy to install, depending on site. Reduced pressure drops	Sizes 808 to 3028
Master/slave operation	Unit equipped with supplementary water outlet temperature sensor kit to be field installed allowing master/slave operation of two units connected in parallel	Optimised operation of two units connected in parallel operation with operating time equalisation	•
21 bar evaporator	Reinforced evaporator for extension of the maximum water-side service pressure to 21 bar (standard 10 bar)	Covers applications with a high water column evaporator side (typically high buildings)	•
Single power connection point	Unit power connection via one main supply connection	Quick and easy installation	Sizes 3428 to 4608
Reversed evaporator water connections	Evaporator with reversed water inlet/outlet	Easy installation on sites with specific requirements	•
Service valve set	Liquid line valve (evaporator inlet), compressor suction and discharge line valves and economiser line valve	Allow isolation of various refrigerant circuit components for simplified service and maintenance	•
Evaporator with one pass more	Evaporator with one pass more on the water side	Optimise chiller operation when the chilled water circuit is designed with low waterflows (high delta T evaporator inlet/outlet)	•
Set point adjustment by 4-20mA signal	Connections to allow a 4-20mA signal input	Easy energy management, allow to adjust set point by a 4-20mA external signal	•
Lon gateway	Two-directional communication board complying with Lon Talk protocol	Connects the unit by communication bus to a building management system	•

• ALL MODELS
Refer to the selection tool to find out which options are not compatible.

AVAILABLE OPTIONS

Options	Description	Avantages	LX ST/HE/XE
HP single-pump hydraulic module	Complete hydraulic module equipped with water filter, relief valve, one high pressure pump and drain valve. For more details, refer to the dedicated chapter (expansion tank not included; option with built-in safety hydraulic components available).	Quick and easy installation (plug & play)	Sizes 808 to 1528
HP dual-pump hydraulic module	Dual high pressure water pump, water filter, electronic water flow control, pressure transducers. For more details, refer to the dedicated chapter (expansion tank not included; option with built-in safety hydraulic components available)	Quick and easy installation (plug & play)	Sizes 808 to 1528
LP single-pump hydraulic module	Single low pressure water pump, water filter, electronic water flow control, pressure sensors. For more details, refer to the dedicated chapter (expansion tank not included; option with built-in safety hydraulic components available)	Quick and easy installation (plug & play)	Sizes 808 to 1528
LP dual-pump hydraulic module	Dual low pressure water pump, water filter, electronic water flow control, pressure sensors. For more details, refer to the dedicated chapter (expansion tank not included; option with built-in safety hydraulic components available)	Quick and easy installation (plug & play)	Sizes 808 to 1528
Dual relief valves on 3-way valve	Three-way valve upstream of dual relief valves on the shell and tubes evaporator	Valve replacement and inspection facilitated without refrigerant loss. Conforms to European standard EN378/BGVD4	Sizes 808 to 3028
Compliance with Swiss regulations	Additional tests on the water heat exchangers: supply (additional of PED documents) supplementary certificates and test certifications	Compliance with Swiss regulations	•
Compliance with Russian regulations	EAC certification	Compliance with Russian regulations	•
Bacnet over IP	Bi-directional high-speed communication using BACnet protocol over Ethernet network (IP)	Easy, high-speed connection by Ethernet line to a building management system. Allows access to multiple unit parameters	•
Energy Management Module	Control board with additional inputs/outputs. See Contacts available in option on control description.	Extended remote control capabilities (setpoint reset by 0-20 mA input, ice storage end, demand limits, boiler on/off command...)	•
7" user interface	Control supplied with a 7 inch colour touch screen user interface	Enhanced ease of use.	•
Input contact for Refrigerant leak detection	0-10 V signal to report any refrigerant leakage in the unit directly on the controller (the leak detector itself must be supplied by the customer)	Immediate customer notification of refrigerant losses to the atmosphere, allowing timely corrective actions	•
Compliance with Australian regulations	Unit approved to Australian code	Conformance with Australian regulations	•
Power factor correction	Capacitors for automatic correction of power factor (cos phi) value to 0.95.	Reduction of the apparent electrical power, compliance with minimum power factor limit set by utilities	Sizes 808 to 3028
Insulation of the evap. in/ out ref.lines	Thermal insulation of the evaporator entering/leaving refrigerant lines with flexible, UV resistant insulation	Prevents condensation on the evaporator entering/ leaving refrigerant lines	•
MCHE anti-corosion protection Protect2	Coating by conversion process which modifies the surface of the aluminium producing a coating that is integral to the coil. Complete immersion in a bath to ensure 100% coverage. No heat transfer variation, salt spray resistance test for 4000 hours (ASTM B117)	Protect2 Improved corrosion resistance of the MCHE coils by 2, recommended for use in moderately corrosive environments	•
MCHE anti-corosion protection Protect4	Extremely durable and flexible epoxy polymer coating applied on micro channel coils by electro coating process, final UV protective topcoat. Minimal heat transfer variation, tested 6000 hours constant neutral salt spray per ASTM B117, superior impact resistance per ASTM D2794	Protect4 Improved corrosion resistance of the MCHE coils by 4, recommended for use in corrosive environments	•
Evaporator with aluminium jacket	Evaporator covered with an aluminium sheet for thermal insulation protection	Improved resistance to aggressive climate conditions	•
Expansion tank	6 bar expansion tank integrated in the hydraulic module (requires hydraulic module option)	Easy and fast installation (plug & play), & protection of closed water systems from excessive pressure	Sizes 808 to 1528
Anti-vibration mounts	Elastomer anti-vibration mounts to be placed under the unit (material classified B2 fire class according to DIN 4102).	Isolate the unit from the building, avoid transmission of vibrations and associated noise to the building. Must be used in conjunction with a flexible connection on the water side	•
Free cooling drycooler management	Control & connections to a free cooling drycooler Opera or Vextra fitted with the FC control box option	Easy system management, extended control capabilities to a drycooler used in free cooling mode	•

• ALL MODELS

Refer to the selection tool to find out which options are not compatible.

TECHNICAL SPECIFICATIONS

POWERCIAT LX ST-HE				0808	0908	1008	1108	1358	1528	1858	2008	2158
Cooling												
LX ST standard Full load performances*	CA1	Nominal capacity	kW	273	298	325	391	442	499	612	679	723
		EER	kW/kW	3,13	3,10	3,09	3,21	3,08	3,15	3,13	3,31	3,08
		Eurovent class		A	A	B	A	B	A	A	A	B
LX ST with Xtra & Super Low Noise option Full load performances*	CA1	Nominal capacity	kW	267	291	318	378	426	473	601	654	691
		EER	kW/kW	3,00	2,96	2,98	3,08	2,89	2,93	3,03	3,11	2,91
		Eurovent class		B	B	B	B	C	B	B	A	B
LX HE standard Full load performances*	CA1	Nominal capacity	kW	271	295	321	389	438	494	610	673	720
		EER	kW/kW	3,13	3,10	3,06	3,23	3,04	3,13	3,14	3,30	3,08
		Eurovent class		A	A	B	A	B	A	A	A	B
LX HE with Xtra & Super Low Noise option Full load performances*	CA1	Nominal capacity	kW	267	291	318	378	426	473	601	654	691
		EER	kW/kW	3,03	2,98	3,00	3,11	2,90	2,95	3,05	3,13	2,92
		Eurovent class		B	B	B	A	B	B	B	A	B
LX ST standard Seasonal energy efficiency**		**SEER 12/7 °C Comfort low temp.**	**kWh/kWh**	**4,14**	**4,18**	**4,25**	**4,03**	NA	**4,10**	NA	**4,23**	NA
		ηs cool 12/7 °C	**%**	**162**	**164**	**167**	**158**	NA	**161**	NA	**166**	NA
		SEPR 12/7 °C Process high temp.	**kWh/kWh**	**4,78**	**5,28**	**5,55**	**4,99**	**5,35**	**5,45**	**5,22**	**5,65**	**5,14**
LX ST with low-temperature brine solution option Seasonal energy efficiency**		**SEPR -2/-8 °C Process medium temp.*** **	**kWh/kWh**	**3,05**	**3,30**	**3,45**	**3,16**	**3,39**	**3,47**	**3,43**	**3,64**	**3,33**
LX ST with Xtra & Super Low Noise option Seasonal energy efficiency**		**SEER 12/7 °C Comfort low temp.**	**kWh/kWh**	**4,20**	**4,25**	**4,48**	**4,22**	**4,15**	**4,22**	NA	**4,29**	NA
		ηs cool 12/7 °C	**%**	**165**	**167**	**176**	**166**	**163**	**166**	NA	**168**	NA
		SEPR 12/7 °C Process high temp.	**kWh/kWh**	**5,24**	**5,41**	**5,96**	**5,30**	**5,45**	**5,52**	**5,61**	**5,82**	**5,33**
LX ST with low-temperature brine solution, Xtra & super low noise options Seasonal energy efficiency**		**SEPR -2/-8 °C Process medium temp.*** **	**kWh/kWh**	**3,03**	**3,55**	**3,73**	**3,42**	**3,54**	**3,62**	**3,70**	**3,84**	**3,53**
LX HE standard Seasonal energy efficiency**		**SEER 12/7 °C Comfort low temp.**	**kWh/kWh**	**4,35**	**4,41**	**4,38**	**4,29**	**4,14**	**4,26**	**4,09**	**4,43**	**4,11**
		ηs cool 12/7 °C	**%**	**171**	**173**	**172**	**168**	**162**	**167**	**161**	**174**	**161**
		SEPR 12/7 °C Process high temp.	**kWh/kWh**	**5,94**	**6,08**	**6,17**	**5,81**	**5,76**	**5,88**	**5,67**	**6,13**	**5,55**
LX HE with low-temperature brine solution option Seasonal energy efficiency**		**SEPR -2/-8 °C Process medium temp.*** **	**kWh/kWh**	**3,52**	**3,70**	**3,78**	**3,52**	**3,66**	**3,79**	**3,71**	**3,99**	**3,58**
LX HE with Xtra & Super Low Noise option Seasonal energy efficiency**		**SEER 12/7 °C Comfort low temp.**	**kWh/kWh**	**4,30**	**4,34**	**4,52**	**4,30**	**4,19**	**4,27**	**4,10**	**4,35**	**4,10**
		ηs cool 12/7 °C	**%**	**169**	**170**	**178**	**169**	**165**	**168**	**161**	**171**	**161**
		SEPR 12/7 °C Process high temp.	**kWh/kWh**	**5,85**	**5,99**	**6,29**	**5,78**	**5,71**	**5,76**	**5,82**	**6,06**	**5,55**
LX HE with low-temperature brine solution, Xtra & super low noise options Seasonal energy efficiency**		**SEPR -2/-8 °C Process medium temp.*** **	**kWh/kWh**	**3,47**	**3,70**	**3,89**	**3,56**	**3,65**	**3,74**	**3,81**	**3,98**	**3,64**
LX ST standard Part Load integrated values		IPLV.SI	kW/kW	**4,313**	**4,366**	**4,565**	**4,376**	**4,513**	**4,512**	**4,351**	**4,637**	**4,397**
LX ST with Xtra & Super Low Noise options Part Load integrated values		IPLV.SI	kW/kW	**4,409**	**4,504**	**4,772**	**4,725**	**4,75**	**4,773**	**4,544**	**4,671**	**4,576**
Sound levels												
LX ST-HE												
Sound power(1)			dB(A)	100	100	100	100	102	100	102	100	103
Sound pressure at 10 m(2)			dB(A)	68	68	68	68	70	68	69	68	71
LX ST HE + Low Noise option												
Sound power(1)			dB(A)	94	94	95	96	96	96	98	96	98
Sound pressure at 10 m(2)			dB(A)	62	62	63	64	64	64	66	63	65

*	In accordance with standard EN14511-3:2013.
**	In accordance with standard EN14825:2016, average climate
***	30 % brine solution
CA1	Cooling mode conditions: evaporator water inlet/outlet temperature 12 °C/7 °C, outdoor air temperature 35 °C, evaporator fouling factor 0 m². k/W
ηs cool 12/7 °C & SEER 12/7 °C	**Bold values compliant to Ecodesign Regulation (EU) No. 2016/2281 for Comfort application**
SEPR 12/7°C	**Bold values compliant to Ecodesign Regulation (EU) No. 2016/2281 for Process application**
SEPR -2/-8°C	**Bold values compliant to Ecodesign Regulation (EU) No. 2015/1095 for Process application**
IPLV.SI	Calculated as per AHRI standard 551-591 (SI).
NA	Not authorised for the specific application for the CEE market
(1)	In dB ref=10^{-12} W, 'A' weighted. Declared dual-number noise emission values in accordance with ISO 4871 with an associated uncertainty of +/-3dB(A). Measured in accordance with ISO 9614-1 and certified by Eurovent.
(2)	In dB ref 20µPa, 'A' weighted. Declared dual-number noise emission values in accordance with ISO 4871 with an associated uncertainty of +/-3dB(A). For information, calculated from the sound power Lw(A).

EUROVENT CERTIFIED PERFORMANCE
www.eurovent-certification.com

Eurovent certified values

TECHNICAL SPECIFICATIONS

POWERCIAT LX ST-HE		0808	0908	1008	1108	1358	1528	1858	2008	2158
LX ST-HE + Xtra low noise option										
Sound power(1)	dB(A)	87	87	87	90	91	91	93	92	93
Sound pressure at 10 m(2)	dB(A)	55	55	55	58	59	59	60	59	60
LX ST-HE + Super low noise option										
Sound power(1)	dB(A)	-	-	-	-	89	89	91	90	91
Sound pressure at 10 m(2)	dB(A)	-	-	-	-	57	56	58	57	59
Dimensions										
LX ST-HE										
Length	mm	3604	3604	3604	4798	4798	5992	7186	7186	7186
Width	mm	2253	2253	2253	2253	2253	2253	2253	2253	2253
Height	mm	2322	2322	2322	2322	2322	2322	2322	2322	2322
Operating weight(3)										
LX ST standard	kg	3167	3201	3222	3804	3869	4227	4919	5047	5330
LX ST Unit + low noise option	kg	3412	3446	3467	4072	4137	4491	5208	5332	5615
LX HE standard	kg	3194	3228	3249	3873	3938	4342	5027	5201	5434
LX HE Unit + Low noise option	kg	3439	3473	3494	4141	4206	4607	5316	5485	5719
Compressors		06T semi-hermetic screw, 50 r/s								
Circuit A		1	1	1	1	1	1	1	1	1
Circuit B		1	1	1	1	1	1	1	1	1
Refrigerant(3)		R134a								
Circuit A	kg	37	35	35	51	52	54	58	58	65
	tCO_2e	52,9	50,1	50,1	72,2	74,4	76,5	82,9	82,9	93,0
Circuit B	kg	38,5	36	37	36,5	37	32,5	59	62	58
	tCO_2e	55,1	51,5	52,9	52,2	52,9	46,5	84,4	88,7	82,9
Oil										
Circuit A	l	20,8	20,8	20,8	23,5	23,5	23,5	23,5	23,5	27,6
Circuit B	l	20,8	20,8	20,8	20,8	20,8	20,8	23,5	23,5	23,5
Capacity control		Connect Touch, electronic expansion valve (EXV)								
Minimum capacity	%	15	15	15	15	15	15	15	15	15
Air-cooled exchanger		Aluminium micro-channel coils (MCHE)								
Fans										
LX ST-HE		Axial type, with rotating impeller								
Quantity		6	6	6	8	8	9	11	12	12
Maximum total air flow	l/s	27083	27083	27083	36111	36111	40624	49652	54166	54166
Maximum rotation speed	r/s	15,7	15,7	15,7	15,7	15,7	15,7	15,7	15,7	15,7
LX ST/HE Unit + Xtra Low Noise option										
Maximum total air flow	l/s	20500	20500	20500	27333	27333	30750	37583	41000	41000
Maximum rotation speed	r/s	11,7	11,7	11,7	11,7	11,7	11,7	11,7	11,7	11,7
Exchanger		Flooded multi-pipe type								
Water volume	l	58	61	61	66	70	77	79	94	98
Max. water-side operating pressure without hydraulic module	kPa	1000	1000	1000	1000	1000	1000	1000	1000	1000
Hydraulic module (option)		Pump, Victaulic screen filter, relief valve, water and air vent valve, pressure sensors								
Pump		Centrifugal pump, monocell, 48.3 r/s, low- or high-pressure (as required), single or dual (as required)								
Expansion vessel volume	l	50	50	50	50	50	80			
Max. water-side operating pressure with hydraulic module	kPa	400	400	400	400	400	400			
Water connections with or without hydraulic module		Victaulic® type								
Connections	inch	5 or 4	5 or 4	5 or 4	5 or 4	5 or 4	5 or 4	5	6	6
External diameter(4)	mm	114.3 or 141.3	114.3 or 141.3	114.3 or 141.3	114.3 or 141.3	114.3 or 141.3	114.3 or 141.3	141,3	168,3	168,3
Casing paintwork		Colour code RAL 7035 & RAL 7024								

(1) In dB ref=10^{-12} W, 'A' weighted. Declared dual-number noise emission values in accordance with ISO 4871 with an associated uncertainty of +/-3dB(A). Meas red in accordance with ISO 9614-1 and certified by Eurovent.
(2) In dB ref 20µPa, 'A' weighted. Declared dual-number noise emission values in accordance with ISO 4871 with an associated uncertainty of +/-3dB(A). For information, calculated from the sound power Lw(A).
(3) Values are guidelines only. Refer to the unit name plate.
(4) Depends on the number of passes on the evaporator

EUROVENT CERTIFIED PERFORMANCE
www.eurovent-certification.com

Eurovent certified values

TECHNICAL SPECIFICATIONS

POWERCIAT LX ST-HE				2308	2528	2628	3028	3428	3828	4008	4408	4608
Cooling												
LX ST standard Full load performances*	CA1	Nominal capacity	kW	785	841	886	976	1144	1247	1326	1433	1485
		EER	kW/kW	3,10	3,24	3,12	3,09	3,27	3,23	3,16	3,06	3,10
		Eurovent class		A	A	A	B	A	A	A	B	A
LX ST with Xtra & Super Low Noise option Full load performances*	CA1	Nominal capacity	kW	759	807	875	960	1107	1218	1285	1377	1403,8
		EER	kW/kW	2,88	2,98	2,91	2,95	2,97	3,01	2,81	2,69	2,85
		Eurovent class		C	B	B	B	B	B	C	D	C
LX HE standard Full load performances*	CA1	Nominal capacity	kW	779	833	878	971	1137	1237	1317	1423	1485
		EER	kW/kW	3,10	3,22	3,10	3,11	3,27	3,20	3,13	3,03	3,10
		Eurovent class		A	A	A	A	A	A	A	B	A
LX HE with Xtra & Super Low Noise option Full load performances*	CA1	Nominal capacity	kW	759	807	875	960	1107	1218	1285	1377	1403,8
		EER	kW/kW	2,90	3,00	2,93	2,97	3,03	3,07	2,88	2,75	2,85
		Eurovent class		B	B	B	B	B	B	C	C	C
LX ST standard Seasonal energy efficiency**		**SEER 12/7 °C Comfort low temp.**	**kWh/kWh**	**4,14**	**4,16**	NA	NA	**4,09**	**4,16**	NA	**4,10**	NA
		ηs cool 12/7 °C	**%**	**162**	**163**	NA	NA	**161**	**163**	NA	**161**	NA
		SEPR 12/7 °C Process high temp.	**kWh/kWh**	**5,10**	**5,39**	**5,17**	**5,09**	**5,42**	**5,49**	**5,40**	**5,46**	**5,13**
LX ST with low-temperature brine solution option Seasonal energy efficiency**		**SEPR -2/-8 °C Process medium temp.*** **	**kWh/kWh**	**3,30**	**3,50**	**3,31**	**3,29**	**NA**	**3,44**	**3,55**	**3,72**	**NA**
LX ST with Xtra & Super Low Noise option Seasonal energy efficiency**		**SEER 12/7 °C Comfort low temp.**	**kWh/kWh**	NA	**4,10**	NA	NA	NA	**4,12**	NA	NA	**4,09**
		ηs cool 12/7 °C	**%**	NA	**161**	NA	NA	NA	**162**	NA	NA	**161**
		SEPR 12/7 °C Process high temp.	**kWh/kWh**	**5,43**	**5,46**	**5,37**	**5,39**	**5,14**	**5,26**	NA	NA	**5,15**
LX ST with low-temperature brine solution, Xtra & super low noise options Seasonal energy efficiency**		**SEPR -2/-8 °C Process medium temp.*** **	**kWh/kWh**	**3,63**	**3,64**	**3,58**	**3,60**	**3,48**	**3,44**	**3,74**	**3,82**	**3,30**
LX HE standard Seasonal energy efficiency**		**SEER 12/7 °C Comfort low temp.**	**kWh/kWh**	**4,34**	**4,33**	**4,13**	**4,09**	**4,35**	**4,36**	**4,12**	**4,15**	**4,10**
		ηs cool 12/7 °C	**%**	**171**	**170**	**162**	**161**	**168**	**174**	**162**	**163**	**161**
		SEPR 12/7 °C Process high temp.	**kWh/kWh**	**5,57**	**5,83**	**5,57**	**5,55**	**5,77**	**5,74**	**5,62**	**5,55**	**5,38**
LX HE with low-temperature brine solution option Seasonal energy efficiency**		**SEPR -2/-8 °C Process medium temp.*** **	**kWh/kWh**	**3,63**	**3,81**	**3,60**	**3,60**	**3,39**	**3,67**	**3,56**	**3,62**	**3,47**
LX HE with Xtra & Super Low Noise option Seasonal energy efficiency**		**SEER 12/7 °C Comfort low temp.**	**kWh/kWh**	**4,10**	**4,14**	**4,10**	**4,10**	**4,14**	**4,41**	NA	NA	**4,13**
		ηs cool 12/7 °C	**%**	**161**	**163**	**161**	**161**	**162**	**173**	NA	NA	**162**
		SEPR 12/7 °C Process high temp.	**kWh/kWh**	**5,60**	**5,69**	**5,55**	**5,60**	**5,42**	**5,55**	**5,14**	**5,13**	**5,42**
LX HE with low-temperature brine solution, Xtra & super low noise options Seasonal energy efficiency**		**SEPR -2/-8 °C Process medium temp.*** **	**kWh/kWh**	**3,71**	**3,75**	**3,67**	**3,69**	**3,66**	**3,65**	**3,87**	**3,82**	**3,82**
LX ST standard Part Load integrated values		IPLV.SI	kW/kW	4,475	4,554	4,321	4,254	4,450	4,590	4,320	4,450	4,260
LX ST with Xtra & Super Low Noise options Part Load integrated values		IPLV.SI	kW/kW	4,554	4,664	4,349	4,388	4,280	4,510	3,830	3,870	4,410
Sound levels												
LX ST-HE												
Sound power(1)			dB(A)	103	101	104	103	104	103	105	105	105
Sound pressure at 10 m(2)			dB(A)	70	70	71	70	71	70	72	72	72
LX ST HE + Low Noise option												
Sound power(1)			dB(A)	98	98	99	98	98	98	101	99	99
Sound pressure at 10 m(2)			dB(A)	65	66	66	65	65	65	68	65	65

*	In accordance with standard EN14511-3:2013.
**	In accordance with standard EN14825:2016, average climate
***	30 % brine solution
CA1	Cooling mode conditions: evaporator water inlet/outlet temperature 12 °C/7 °C, outdoor air temperature 35 °C, evaporator fouling factor 0 m². k/W
ηs cool 12/7 °C & SEER 12/7 °C	**Bold values compliant to Ecodesign Regulation (EU) No. 2016/2281 for Comfort application**
SEPR 12/7°C	**Bold values compliant to Ecodesign Regulation (EU) No. 2016/2281 for Process application**
SEPR -2/-8°C	**Bold values compliant to Ecodesign Regulation (EU) No. 2015/1095 for Process application**
IPLV.SI	Calculated as per AHRI standard 551-591 (SI).
NA	Not authorised for the specific application for the CEE market
(1)	In dB ref=10^{-12} W, 'A' weighted. Declared dual-number noise emission values in accordance with ISO 4871 with an associated uncertainty of +/-3dB(A). Measured in accordance with ISO 9614-1 and certified by Eurovent.
(2)	In dB ref 20µPa, 'A' weighted. Declared dual-number noise emission values in accordance with ISO 4871 with an associated uncertainty of +/-3dB(A). For information, calculated from the sound power Lw(A).

EUROVENT CERTIFIED PERFORMANCE www.eurovent-certification.com

Eurovent certified values

TECHNICAL SPECIFICATIONS

POWERCIAT LX ST-HE		2308	2528	2628	3028	3428	3828	4008	4408	4608
LX ST-HE + Xtra low noise option										
Sound power(1)	dB(A)	94	93	95	94	94	94	99	95	96
Sound pressure at 10 m(2)	dB(A)	61	60	62	61	61	61	66	62	63
LX ST-HE + Super low noise option										
Sound power(1)	dB(A)	92	91	93	92	93	93	97	94	95
Sound pressure at 10 m(2)	dB(A)	59	58	60	59	60	60	64	61	62
Dimensions										
LX ST-HE										
Length	mm	7186	8380	8380	9574	11962	11962	11962	11962	13157
Width	mm	2253	2253	2253	2253	2253	2253	2253	2253	2253
Height	mm	2322	2322	2322	2322	2322	2322	2322	2322	2322
Operating weight(3)										
LX ST standard	kg	5641	6018	6322	6766	7993	8134	8713	8790	9097
LX ST Unit + low noise option	kg	5925	6295	6599	7035	8287	8428	9008	9085	9384
LX HE standard	kg	5641	6018	6322	6766	7993	8134	8713	8790	9097
LX HE Unit + Low noise option	kg	5925	6295	6599	7035	8287	8428	9008	9085	9384
Compressors		06T semi-hermetic screw, 50 r/s								
Circuit A		1	1	1	1	1	1	1	1	1
Circuit B		1	1	1	1	1	1	1	1	1
Refrigerant(3)		R134a								
Circuit A	kg	69	72	69	75	76	76	110	116	132
	tCO_2e	98,7	103,0	98,7	107,3	108,7	108,7	157,3	165,9	188,8
Circuit B	kg	65	63	76	79	108	120	116	124	120
	tCO_2e	93,0	90,1	108,7	113,0	154,4	171,6	165,9	177,3	171,6
Oil										
Circuit A	l	27,6	27,6	27,6	27,6	27,6	27,6	36,0	36,0	36,0
Circuit B	l	23,5	23,5	27,6	27,6	36,0	36,0	36,0	36,0	36,0
Capacity control		Connect Touch, electronic expansion valve (EXV)								
Minimum capacity	%	15	15	15	15	15	15	15	15	15
Air-cooled exchanger		Aluminium micro-channel coils (MCHE)								
Fans		Axial type, with rotating impeller								
LX ST-HE										
Quantity		12	14	14	16	20	20	20	20	22
Maximum total air flow	l/s	54166	63194	63194	72221	90277	90277	90277	90277	99304
Maximum rotation speed	r/s	15,7	15,7	15,7	15,7	15,7	15,7	15,7	15,7	15,7
LX ST/HE Unit + Xtra Low Noise option										
Maximum total air flow	l/s	41000	47833	47833	54667	68333	68333	68333	68333	75167
Maximum rotation speed	r/s	11,7	11,7	11,7	11,7	11,7	11,7	11,7	11,7	11,7
Exchanger		Flooded multi-pipe type								
Water volume	l	119	119	130	140	164	174	180	189	189
Max. water-side operating pressure without hydraulic module	kPa	1000	1000	1000	1000	1000	1000	1000	1000	1000
Water connections with or without hydraulic module		Victaulic® type								
Connections	inch	6	6	6	8	6	6	6	6	6
External diameter	mm	168,3	168,3	168,3	219,1	168,3	168,3	168,3	168,3	168,3
Casing paintwork		Colour code RAL 7035 & RAL 7024								

(1) In dB ref=10^{-12} W, 'A' weighted. Declared dual-number noise emission values in accordance with ISO 4871 with an associated uncertainty of +/-3dB(A). Meas red in accordance with ISO 9614-1 and certified by Eurovent.
(2) In dB ref 20µPa, 'A' weighted. Declared dual-number noise emission values in accordance with ISO 4871 with an associated uncertainty of +/-3dB(A). For information, calculated from the sound power Lw(A).
(3) Values are guidelines only. Refer to the unit name plate.
(4) Depends on the number of passes on the evaporator

EUROVENT CERTIFIED PERFORMANCE
www.eurovent-certification.com

Eurovent certified values

TECHNICAL SPECIFICATIONS

POWERCIAT LX XE				0808	0908	1008	1108	1358	1528	1858	2008	2158
Cooling												
LX XE standard Full load performances*	CA1	Nominal capacity	kW	274	299	327	394	444	501	615	682	727
		EER	kW/kW	3,22	3,19	3,15	3,32	3,13	3,22	3,23	3,34	3,17
		Eurovent class		A	A	A	A	A	A	A	A	A
LX XE with Xtra Low Noise option Full load performances*	CA1	Nominal capacity	kW	270	294	321	382	430	478	607	661	698
		EER	kW/kW	3,12	3,1	3,11	3,2	2,99	3,04	3,14	3,22	3,01
		Eurovent class		A	A	A	A	B	B	A	A	B
LX XE standard Seasonal energy efficiency**		**SEER $_{12/7\,°C}$ Comfort low temp.**	**kWh/kWh**	**4,45**	**4,50**	**4,51**	**4,42**	**4,28**	**4,50**	**4,15**	**4,59**	**4,23**
		ηs cool $_{12/7\,°C}$	**%**	**175**	**177**	**177**	**174**	**168**	**177**	**163**	**181**	**166**
		SEPR $_{12/7\,°C}$ Process high temp.	**kWh/kWh**	**6,07**	**6,23**	**6,35**	**5,94**	**5,89**	**6,06**	**5,82**	**6,31**	**5,69**
LX XE with low-temperature brine solution options Seasonal energy efficiency**		**SEPR$_{-2/-8\,°C}$ Process medium temp.*** **	**kWh/kWh**	**3,59**	**3,81**	**3,91**	**3,62**	**3,76**	**3,85**	**3,82**	**4,12**	**3,69**
LX XE with Xtra Low Noise option Seasonal energy efficiency**		**SEER $_{12/7\,°C}$ Comfort low temp.**	**kWh/kWh**	**4,39**	**4,49**	**4,65**	**4,40**	**4,29**	**4,37**	**4,20**	**4,48**	**4,15**
		ηs cool $_{12/7\,°C}$	**%**	**173**	**177**	**183**	**173**	**169**	**172**	**165**	**176**	**163**
		SEPR $_{12/7\,°C}$ Process high temp.	**kWh/kWh**	**5,94**	**6,16**	**6,47**	**5,89**	**5,82**	**5,89**	**5,98**	**6,20**	**5,66**
LX XE with low-temperature brine solution, Xtra low noise options Seasonal energy efficiency**		**SEPR$_{-2/-8\,°C}$ Process medium temp.*** **	**kWh/kWh**	**3,54**	**3,82**	**4,01**	**3,65**	**3,72**	**3,77**	**3,92**	**4,08**	**3,71**
Sound levels												
LX XE												
Sound power(1)			dB(A)	99	99	99	99	101	99	101	99	103
Sound pressure at 10 m(2)			dB(A)	67	67	67	67	69	67	68	67	70
LX XE + low noise option												
Sound power(1)			dB(A)	93	93	94	95	95	95	97	96	97
Sound pressure at 10 m(2)			dB(A)	61	61	62	63	63	63	65	63	64
LX XE + Xtra low noise option												
Sound power(1)			dB(A)	87	87	87	90	91	91	93	92	94
Sound pressure at 10 m(2)			dB(A)	55	55	55	58	59	59	60	59	61

*	In accordance with standard EN14511-3:2013.
**	In accordance with standard EN14825:2016, average climate
***	30 % brine solution
CA1	Cooling mode conditions: evaporator water inlet/outlet temperature 12 °C/7 °C, outdoor air temperature 35 °C, evaporator fouling factor 0 m². k/W
ηs cool $_{12/7\,°C}$ & SEER $_{12/7\,°C}$	**Bold values compliant to Ecodesign Regulation (EU) No. 2016/2281 for Comfort application**
SEPR $_{12/7°C}$	**Bold values compliant to Ecodesign Regulation (EU) No. 2016/2281 for Process application**
SEPR $_{-2/-8°C}$	**Bold values compliant to Ecodesign Regulation (EU) No. 2015/1095 for Process application**
IPLV.SI	Calculated as per AHRI standard 551-591 (SI).
(1)	In dB ref=10^{-12} W, 'A' weighted. Declared dual-number noise emission values in accordance with ISO 4871 with an associated uncertainty of +/-3dB(A). Measured in accordance with ISO 9614-1 and certified by Eurovent.
(2)	In dB ref 20µPa, 'A' weighted. Declared dual-number noise emission values in accordance with ISO 4871 with an associated uncertainty of +/-3dB(A). For information, calculated from the sound power Lw(A).

EUROVENT CERTIFIED PERFORMANCE
www.eurovent-certification.com

Eurovent certified values

1

TECHNICAL SPECIFICATIONS

POWERCIAT LX XE		0808	0908	1008	1108	1358	1528	1858	2008	2158
Dimensions										
Standard unit										
Length	mm	3604	3604	3604	4798	4798	5992	7186	7186	7186
Width	mm	2253	2253	2253	2253	2253	2253	2253	2253	2253
Height	mm	2322	2322	2322	2322	2322	2322	2322	2322	2322
Operating weight(3)										
LX XE standard	kg	3167	3201	3222	3804	3869	4227	4919	5047	5330
LX XE + low noise option	kg	3412	3446	3467	4072	4137	4491	5208	5332	5615
Compressors		06T semi-hermetic screw, 50 r/s								
Circuit A		1	1	1	1	1	1	1	1	1
Circuit B		1	1	1	1	1	1	1	1	1
Refrigerant(3)		R134a								
Circuit A	kg	37	35	35	51	52	54	58	58	65
	tCO_2e	52,9	50,1	50,1	72,2	74,4	76,5	82,9	82,9	93,0
Circuit B	kg	38,5	36	37	36,5	37	32,5	59	62	58
	tCO_2e	55,1	51,5	52,9	52,2	52,9	46,5	84,4	88,7	82,9
Oil										
Circuit A	l	20,8	20,8	20,8	23,5	23,5	23,5	23,5	23,5	27,6
Circuit B	l	20,8	20,8	20,8	20,8	20,8	20,8	23,5	23,5	23,5
Capacity control		Connect Touch, electronic expansion valve (EXV)								
Minimum capacity	%	15	15	15	15	15	15	15	15	15
Air-cooled exchanger		Aluminium micro-channel coils (MCHE)								
Fans										
LX XE		Axial type, with rotating impeller								
Quantity		6	6	6	8	8	9	11	12	12
Maximum total air flow	l/s	28920	28920	28920	38560	38560	43380	53020	57840	57840
Maximum rotation speed	r/s	15,7	15,7	15,7	15,7	15,7	15,7	15,7	15,7	15,7
LX XE + Xtra low noise option										
Maximum total air flow	l/s	23580	23580	23580	31440	31440	35370	43230	47160	47160
Maximum rotation speed	r/s	11,7	11,7	11,7	11,7	11,7	11,7	11,7	11,7	11,7
Exchanger		Flooded multi-pipe type								
Water volume	l	58	61	61	66	70	77	79	94	98
Max. water-side operating pressure without hydraulic module	kPa	1000	1000	1000	1000	1000	1000	1000	1000	1000
Hydraulic module (option)		Pump, Victaulic screen filter, relief valve, water and air vent valve, pressure sensors								
Pump		Centrifugal pump, monocell, 48.3 r/s, low- or high-pressure (as required), single or dual (as required)								
Expansion vessel volume	l	50	50	50	50	50	80			
Max. water-side operating pressure with hydraulic module	kPa	400	400	400	400	400	400			
Water connections with or without hydraulic module		Victaulic® type								
Connections	inch	5 or 4	5 or 4	5 or 4	5 or 4	5 or 4	5 or 4	5	6	6
External diameter	mm	114.3 or 141.3	114.3 or 141.3	114.3 or 141.3	114.3 or 141.3	114.3 or 141.3	114.3 or 141.3	141,3	168,3	168,3
Casing paintwork		Colour code RAL 7035 & RAL 7024								

(3) Values are guidelines only. Refer to the unit name plate.

TECHNICAL SPECIFICATIONS

POWERCIAT LX XE				2308	2528	2628	3028	3428	3828	4008	4408	4608
Cooling												
LX XE standard Full load performances*	CA1	Nominal capacity	kW	788,9	845	890	980	1150	1253	1333	1440	1493
		EER	kW/kW	3,19	3,32	3,19	3,2	3,36	3,3	3,22	3,12	3,19
		Eurovent class		A	A	A	A	A	A	A	A	A
LX XE with Xtra Low Noise option Full load performances*	CA1	Nominal capacity	kW	767	814,8	884	976	1118	1230	1298	1391	1443
		EER	kW/kW	2,99	3,1	3,02	3,06	3,12	3,16	2,97	2,83	2,94
		Eurovent class		B	A	B	B	A	A	B	C	B
LX XE standard Seasonal energy efficiency**		**$SEER_{12/7\,°c}$ Comfort low temp.**	**kWh/kWh**	**4,48**	**4,58**	**4,24**	**4,17**	**4,51**	**4,53**	**4,22**	**4,26**	**4,10**
		ηs $cool_{12/7\,°c}$	**%**	**176**	**180**	**167**	**164**	**177**	**178**	**166**	**167**	**161**
		$SEPR_{12/7\,°c}$ Process high temp.	**kWh/kWh**	**5,75**	**5,97**	**5,77**	**5,66**	**5,94**	**5,92**	**5,74**	**5,67**	**5,50**
LX XE with low-temperature brine solution options Seasonal energy efficiency**		**$SEPR_{-2/-8\,°C}$ Process medium temp.*** **	**kWh/kWh**	**3,75**	**3,88**	**3,77**	**3,70**	**3,58**	**3,87**	**3,66**	**3,84**	**3,56**
LX XE with Xtra Low Noise option Seasonal energy efficiency**		**$SEER_{12/7\,°c}$ Comfort low temp.**	**kWh/kWh**	**4,18**	**4,47**	**4,13**	**4,17**	**4,21**	**4,33**	NA	NA	**4,22**
		ηs $cool_{12/7\,°c}$	**%**	**164**	**176**	**162**	**164**	**165**	**170**	NA	NA	**166**
		$SEPR_{12/7\,°c}$ Process high temp.	**kWh/kWh**	**5,76**	**5,86**	**5,69**	**5,73**	**5,58**	**5,69**	**5,35**	**5,30**	**5,49**
LX XE with low-temperature brine solution, Xtra low noise options Seasonal energy efficiency**		**$SEPR_{-2/-8\,°C}$ Process medium temp.*** **	**kWh/kWh**	**3,80**	**3,82**	**3,76**	**3,78**	**3,76**	**3,76**	**3,90**	**3,85**	**3,88**
Sound levels												
LX XE												
Sound power(1)			dB(A)	103	101	104	102	103	102	104	104	104
Sound pressure at 10 m(2)			dB(A)	70	70	71	69	70	69	71	71	71
LX XE + low noise option												
Sound power(1)			dB(A)	98	97	99	98	98	98	100	99	99
Sound pressure at 10 m(2)			dB(A)	65	65	66	65	65	65	67	65	65
LX XE + Xtra low noise option												
Sound power(1)			dB(A)	94	94	95	94	94	94	99	95	96
Sound pressure at 10 m(2)			dB(A)	61	61	62	61	61	61	66	62	63

*	In accordance with standard EN14511-3:2013.
**	In accordance with standard EN14825:2016, average climate
***	30 % brine solution
CA1	Cooling mode conditions: evaporator water inlet/outlet temperature 12 °C/7 °C, outdoor air temperature 35 °C, evaporator fouling factor 0 m^2. k/W
ηs $cool_{12/7\,°c}$ & $SEER_{12/7\,°c}$	**Bold values compliant to Ecodesign Regulation (EU) No. 2016/2281 for Comfort application**
$SEPR_{12/7°C}$	**Bold values compliant to Ecodesign Regulation (EU) No. 2016/2281 for Process application**
$SEPR_{-2/-8°C}$	**Bold values compliant to Ecodesign Regulation (EU) No. 2015/1095 for Process application**
IPLV.SI	Calculated as per AHRI standard 551-591 (SI).
(1)	In dB ref=10^{-12} W, 'A' weighted. Declared dual-number noise emission values in accordance with ISO 4871 with an associated uncertainty of +/-3dB(A). Measured in accordance with ISO 9614-1 and certified by Eurovent.
(2)	In dB ref 20µPa, 'A' weighted. Declared dual-number noise emission values in accordance with ISO 4871 with an associated uncertainty of +/-3dB(A). For information, calculated from the sound power Lw(A).
NA	Not authorised for the specific application for the CEE market

EUROVENT CERTIFIED PERFORMANCE
www.eurovent-certification.com

Eurovent certified values

1

TECHNICAL SPECIFICATIONS

POWERCIAT LX XE		2308	2528	2628	3028	3428	3828	4008	4408	4608
Dimensions										
Standard unit										
Length	mm	7186	8380	8380	9574	11962	11962	11962	11962	13157
Width	mm	2253	2253	2253	2253	2253	2253	2253	2253	2253
Height	mm	2322	2322	2322	2322	2322	2322	2322	2322	2322
Operating weight(3)										
LX XE standard	kg	5641	6018	6322	6766	7993	8134	8713	8790	9097
LX XE + low noise option	kg	5925	6295	6599	7035	8287	8428	9008	9085	9384
Compressors		06T semi-hermetic screw, 50 r/s								
Circuit A		1	1	1	1	1	1	1	1	1
Circuit B		1	1	1	1	1	1	1	1	1
Refrigerant(3)		R134a								
Circuit A	kg	69	72	69	75	76	76	110	116	132
	tCO_2e	98,7	103,0	98,7	107,3	108,7	108,7	157,3	165,9	188,8
Circuit B	kg	65	63	76	79	108	120	116	124	120
	tCO_2e	93,0	90,1	108,7	113,0	154,4	171,6	165,9	177,3	171,6
Oil										
Circuit A	l	27,6	27,6	27,6	27,6	27,6	27,6	36,0	36,0	36,0
Circuit B	l	23,5	23,5	27,6	27,6	36,0	36,0	36,0	36,0	36,0
Capacity control		Connect Touch, electronic expansion valve (EXV)								
Minimum capacity	%	15	15	15	15	15	15	15	15	15
Air-cooled exchanger		Aluminium micro-channel coils (MCHE)								
Fans		Axial type, with rotating impeller								
LX XE										
Quantity		12	14	14	16	20	20	20	20	22
Maximum total air flow	l/s	57840	67480	67480	77120	96400	96400	96400	96400	106040
Maximum rotation speed	r/s	15,7	15,7	15,7	15,7	15,7	15,7	15,7	15,7	15,7
LX XE + Xtra low noise option										
Maximum total air flow	l/s	47160	55020	55020	62880	78600	78600	78600	78600	86460
Maximum rotation speed	r/s	11,7	11,7	11,7	11,7	11,7	11,7	11,7	11,7	11,7
Exchanger		Flooded multi-pipe type								
Water volume	l	119	119	130	140	164	174	180	189	189
Max. water-side operating pressure without hydraulic module	kPa	1000	1000	1000	1000	1000	1000	1000	1000	1000
Water connections with or without hydraulic module		Victaulic® type								
Connections	inch	6	6	6	8	6	6	6	6	6
External diameter	mm	168,3	168,3	168,3	219,1	168,3	168,3	168,3	168,3	168,3
Casing paintwork		Colour code RAL 7035 & RAL 7024								

(3) Values are guidelines only. Refer to the unit name plate.

TECHNICAL SPECIFICATIONS

Basic unit (excluding pump)

POWERCIAT LX ST/HE		0808	0908	1008	1108	1358	1528	1858	2008	2158	2308	2528	2628	3028
Power circuit supply														
Nominal voltage	V-ph-Hz	400-3-50												
Voltage range	V	360-440												
Control circuit supply		24 V via internal transformer												
Maximum operating input power(1) - LX ST/HE														
Standard unit	kW	121	135	148	170	197	216	266	288	322	340	369	397	459
Unit + Xtra / Super Low Noise option	kW	115	128	141	161	188	206	253	274	308	326	354	383	443
Power factor at maximum power(2) - LX ST/HE														
Displacement Power Factor (Cos Phi)		0,88	0,88	0,88	0,88	0,89	0,89	0,89	0,89	0,89	0,89	0,89	0,90	0,90
Displacement Power Factor (Cos Phi) unit + Xtra / Super Low noise option		0,88	0,88	0,88	0,88	0,89	0,89	0,89	0,89	0,89	0,89	0,89	0,90	0,90
Nominal unit current draw(3) - LX ST/HE														
Standard unit	A	154	170	186	215	246	267	332	358	409	430	446	502	542
Unit + Xtra / Super Low Noise option	A	143	159	175	200	231	252	311	335	386	407	423	479	515
Maximum operating current draw (Un)(1) - LX ST/HE														
Standard unit	A	198	220	242	278	319	349	431	466	521	551	597	636	736
Unit + Xtra / Super Low Noise option	A	187	209	231	263	304	334	410	443	498	528	574	613	709
Maximum current (Un-10 %)(2) - LX ST/HE														
Standard unit	A	198	220	242	278	319	349	431	466	521	551	597	636	736
Unit + Xtra / Super Low Noise option	A	187	209	231	263	304	334	410	443	498	528	574	613	709
Start-up current(3) + (4) - LX ST/HE														
Standard unit	A	213	224	224	346	442	442	492	492	676	691	691	733	756
Unit + Xtra / Super Low Noise option	A	210	221	221	343	439	439	487	486	671	686	686	727	750
Maximum start-up current (Un)(2) + (4) - LX ST/HE														
Standard unit	A	213	224	224	346	442	442	492	492	676	691	691	733	756
Unit + Xtra / Super Low Noise option	A	210	221	221	343	439	439	487	486	671	686	686	727	750

(1) Values at the unit's permanent maximum operating condition (as shown on the unit's nameplate).
(2) Values at the unit's maximum operating condition (as shown on the unit's nameplate).
(3) Maximum operating current of the smallest compressor(s) + fan current + locked rotor current of the largest compressor.
(4) Standardised EUROVENT conditions, water-cooled exchanger inlet/outlet = 12°C/7°C, outdoor air temperature = 35°C.
(a) When the machines are equipped with two power supplies, circuit 1 is intended to supply refrigerant circuit A and circuit 2 supplies refrigerant circuit B. For units LX 3428 to 4608: circuit 1 supplies circuit A, circuit 2 supplies circuit B

TECHNICAL SPECIFICATIONS

POWERCIAT LX ST/HE		3428	3828	4008	4408	4608
Power circuit supply						
Nominal voltage	V-ph-Hz	400-3-50				
Voltage range	V	360-440				
Control circuit supply		24 V via internal transformer				
Maximum operating input power(1) - LX ST/HE						
Standard unit	kW					
Circuit 1(a)	kW	198	226	269	288	311
Circuit 2(a)	kW	288	314	287	309	311
Single power connection point option	kW	485	539	556	596	622
Unit with Xtra & Super Low Noise option						
Circuit 1(a)	kW	190	218	258	276	298
Circuit 2(a)	kW	277	301	276	297	298
Single power connection point option	kW	466	519	533	573	597
Power factor at maximum power(1) - LX ST/HE						
Standard unit						
Displacement Power Factor (Cos Phi)		0,88	0,88	0,88	0,88	0,88
Unit + Xtra & Super low noise option						
Displacement Power Factor (Cos Phi)		0,88	0,88	0,88	0,88	0,88
Nominal unit current draw(2) - LX ST/HE						
Standard unit						
Circuit 1(a)	A	255	271	345	358	394
Circuit 2(a)	A	354	394	358	390	394
Single power connection point option	A	609	665	703	748	789
Unit + Xtra & Super low noise option						
Circuit 1(a)	A	242	258	326	339	373
Circuit 2(a)	A	337	373	339	371	373
Single power connection point option	A	579	631	665	710	747
Maximum operating current draw (Un)(1) - LX ST/HE						
Standard unit						
Circuit 1(a)	A	322	368	443	473	512
Circuit 2(a)	A	469	512	473	508	512
Single power connection point option	A	791	880	916	981	1025
Unit with Xtra & Super Low Noise option						
Circuit 1(a)	A	309	355	424	454	491
Circuit 2(a)	A	452	491	454	489	491
Single power connection point option	A	761	846	878	943	983
Maximum current (Un-10 %)(1) - LX ST/HE						
Standard unit						
Circuit 1(a)	A	322	368	443	473	512
Circuit 2(a)	A	469	512	473	508	512
Single power connection point option	A	791	880	916	981	1025
Unit with Xtra & Super Low Noise option						
Circuit 1(a)	A	309	355	424	454	491
Circuit 2(a)	A	452	491	454	489	491
Single power connection point option	A	761	846	878	943	983

(1) Values at the unit's permanent maximum operating condition (as shown on the unit's nameplate).
(2) Values at the unit's maximum operating condition (as shown on the unit's nameplate).
(a) When the machines are equipped with two power supplies, circuit 1 is intended to supply refrigerant circuit A and circuit 2 supplies refrigerant circuit B.
For units LX 3428 to 4608: circuit 1 supplies circuit A, circuit 2 supplies circuit B.

TECHNICAL SPECIFICATIONS

POWERCIAT LX ST/HE		3428	3828	4008	4408	4608
Start-up current(3) - LX ST/HE						
Standard unit						
Circuit 1(a)	A	587	587	629	629	629
Circuit 2(a)	A	629	629	629	629	629
Single power connection point option	A	687	702	729	744	744
Unit + Xtra & Super low noise option						
Circuit 1(a)	A	587	587	629	629	629
Circuit 2(a)	A	629	629	629	629	629
Single power connection point option	A	687	702	729	744	744
Maximum start-up current (Un)(2) - LX ST/HE						
Standard unit						
Circuit 1(a)	A	587	587	629	629	629
Circuit 2(a)	A	629	629	629	629	629
Single power connection point option	A	687	702	729	744	744
Unit + Xtra & Super low noise option						
Circuit 1(a)	A	576	576	613	613	611
Circuit 2(a)	A	615	611	613	613	611
Single power connection point option	A	687	702	729	744	744

(2) Values at the unit's maximum operating condition (as shown on the unit's nameplate).
(3) Maximum operating current of the smallest compressor(s) + fan current + locked rotor current of the largest compressor.
(a) When the machines are equipped with two power supplies, circuit 1 is intended to supply refrigerant circuit A and circuit 2 supplies refrigerant circuit B.
For units LX 3428 to 4608: circuit 1 supplies circuit A, circuit 2 supplies circuit B.

TECHNICAL SPECIFICATIONS

POWERCIAT LX XE		0808	0908	1008	1108	1358	1528	1858	2008	2158	2308	2528	2628	3028
Power circuit supply														
Nominal voltage	V-ph-Hz	400-3-50												
Voltage range	V	360-440												
Control circuit supply		24 V via internal transformer												
Maximum operating input power(1)														
Standard unit	kW	125	136	147	170	192	211	258	278	313	332	361	385	446
Unit + Xtra / Super Low Noise option	kW	121	132	144	166	187	206	251	271	305	324	352	377	437
Power factor at maximum power(2)														
Displacement Power Factor (Cos Phi)+		0,88	0,88	0,88	0,88	0,89	0,89	0,89	0,89	0,89	0,89	0,89	0,90	0,90
Displacement Power Factor (Cos Phi) unit + Xtra / Super Low noise option		0,88	0,88	0,88	0,88	0,89	0,89	0,89	0,89	0,89	0,89	0,89	0,90	0,90
Nominal operating current draw(3)														
Circuit 1(a)	A	146	162	178	205	236	257	318	342	393	414	430	486	524
Unit + Xtra / Super Low Noise option	A	140	156	172	197	228	248	307	330	381	402	416	472	510
Maximum operating current draw (Un)(1)														
Circuit 1(a)	A	204	222	240	279	312	342	417	450	505	535	581	620	718
Unit + Xtra / Super Low Noise option	A	198	216	234	271	304	333	406	438	493	523	567	606	704
Maximum current (Un-10 %)(2)														
Circuit 1(a)	A	204	222	240	279	312	342	417	450	505	535	581	620	718
Unit + Xtra / Super Low Noise option	A	198	216	234	271	304	333	406	438	493	523	567	606	704
Start-up current(3) + (4)														
Circuit 1(a)	A	207	218	218	338	434	434	481	480	664	679	679	721	742
Unit + Xtra / Super Low Noise option	A	204	215	215	335	431	431	476	474	659	674	674	715	736
Maximum start-up current (Un)(2) + (3)														
Circuit 1(a)	A	207	218	218	338	434	434	481	480	664	679	679	721	742
Unit + Xtra / Super Low Noise option	A	204	215	215	335	431	431	476	474	659	674	674	715	736

(1) Values at the unit's permanent maximum operating condition (as shown on the unit's nameplate).
(2) Values at the unit's maximum operating condition (as shown on the unit's nameplate).
(3) Maximum operating current of the smallest compressor(s) + fan current + locked rotor current of the largest compressor.
(4) Standardised EUROVENT conditions, water-cooled exchanger inlet/outlet = 12°C/7°C, outdoor air temperature = 35°C.
(a) When the machines are equipped with two power supplies, circuit 1 is intended to supply refrigerant circuit A and circuit 2 supplies refrigerant circuit B. For units LX 3428 to 4608: circuit 1 supplies circuit A, circuit 2 supplies circuit B.

TECHNICAL SPECIFICATIONS

POWERCIAT LX XE		3428	3828	4008	4408	4608
Power circuit supply						
Nominal voltage	V-ph-Hz	400-3-50				
Voltage range	V	360-440				
Control circuit supply		24 V via internal transformer				
Maximum operating input power(1) or (2)						
Standard unit						
Circuit 1(a)	kW	189	217	260	278	301
Circuit 2(a)	kW	276	300	278	299	300
Single power connection point option	kW	465	517	537	576	601
Unit + Xtra & Super low noise option						
Circuit 1(a)	kW	184	212	253	271	294
Circuit 2(a)	kW	271	294	272	293	294
Single power connection point option	kW	453	505	525	564	588
Power factor at maximum power(1) or (2)						
Standard unit		0,87	0,87	0,87	0,87	0,87
Displacement Power Factor (Cos Phi)		0,87	0,87	0,87	0,87	0,87
Unit + Xtra & Super low noise option						
Displacement Power Factor (Cos Phi) unit + Xtra & Super Low noise option		0,86	0,87	0,87	0,86	0,86
Nominal operating current draw(3)						
Standard unit						
Circuit 1(a)	A	246	262	332	345	380
Circuit 2(a)	A	342	380	345	377	380
Single power connection point option	A	588	642	677	722	760
Unit + Xtra & Super low noise option						
Circuit 1(a)	A	239	255	322	335	369
Circuit 2(a)	A	333	369	335	367	369
Single power connection point option	A	569	622	657	702	738
Maximum operating current draw (Un)(1) or (2)						
Standard unit						
Circuit 1(a)	A	313	359	430	460	498
Circuit 2(a)	A	457	498	460	495	498
Single power connection point option	A	770	857	890	955	996
Unit + Xtra & Super low noise option						
Circuit 1(a)	A	306	352	420	450	487
Circuit 2(a)	A	448	487	450	485	487
Single power connection point option	A	751	837	870	935	974
Maximum current (Un-10 %)(1) or (2)						
Standard unit						
Circuit 1(a)	A	313	359	430	460	498
Circuit 2(a)	A	457	498	460	495	498
Single power connection point option	A	770	857	890	955	996
Unit + Xtra & Super low noise option						
Circuit 1(a)	A	306	352	420	450	487
Circuit 2(a)	A	448	487	450	485	487
Single power connection point option	A	751	837	870	935	974

(1) Values at the unit's permanent maximum operating condition (as shown on the unit's nameplate).
(2) Values at the unit's maximum operating condition (as shown on the unit's nameplate).
(3) Maximum operating current of the smallest compressor(s) + fan current + locked rotor current of the largest compressor.
(a) When the machines are equipped with two power supplies, circuit 1 is intended to supply refrigerant circuit A and circuit 2 supplies the refrigerant circuit B

TECHNICAL SPECIFICATIONS

POWERCIAT LX XE		3428	3828	4008	4408	4608
Start-up current(3) + (4)						
Standard unit						
Circuit 1(a)	A	587	587	629	629	629
Circuit 2(a)	A	629	629	629	629	629
Single power connection point option	A	687	702	729	744	744
Unit + Xtra & Super low noise option						
Circuit 1(a)	A	587	587	629	629	629
Circuit 2(a)	A	629	629	629	629	629
Single power connection point option	A	670	681	710	725	723
Maximum start-up current (Un)(2) + (4)						
Standard unit						
Circuit 1(a)	A	587	587	629	629	629
Circuit 2(a)	A	629	629	629	629	629
Single power connection point option	A	687	702	729	744	744
Unit + Xtra & Super low noise option						
Circuit 1(a)	A	587	587	629	629	629
Circuit 2(a)	A	629	629	629	629	629
Single power connection point option	A	670	681	710	725	723

(2) Values at the unit's maximum operating condition (as shown on the unit's nameplate).
(3) Maximum operating current of the smallest compressor(s) + fan current + locked rotor current of the largest compressor.
(4) Standardised EUROVENT conditions, water-cooled exchanger inlet/outlet = 12°C/7°C, outdoor air temperature = 35°C.
(a) When the machines are equipped with two power supplies, circuit 1 is intended to supply refrigerant circuit A and circuit 2 supplies the refrigerant circuit B

Short circuit current withstand capability (TN system(1))

POWERCIAT LX ST/HE/XE		0808 to 1528	1858 to 3028	3428 to 4608
Short-circuit withstand current (TN system)				
Circuit A+B	kA	38	50	50
Circuit C+D	kA	NA	NA	50
Unit + single power connection point option	A	NA	NA	50

(1) If another current limitation protection device is used, its time-current and thermal constraint (I^2t) trip characteristics must be at least equivalent to those of the recommended protection.
Note: The short-circuit stability current values above are suitable with the TN system.

Dimensions

■ POWERCIAT LX ST-HE-XE 0808 to 1008

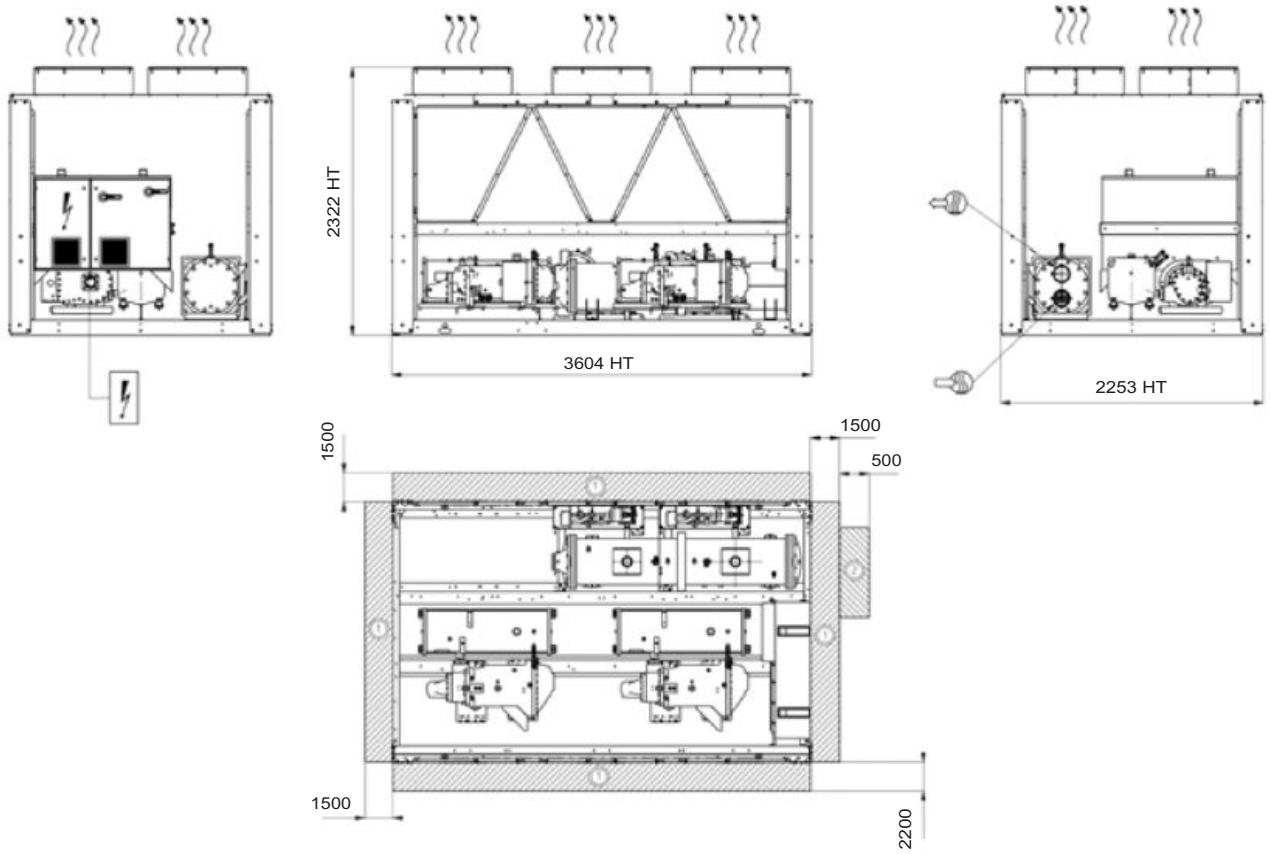

Key
All dimensions in mm

- (1) Clearance required for maintenance and air flow
- (2) Clearance recommended for coil removal
- Water inlet
- Water outlet
- Air outlet, do not obstruct
- Electrical cabinet

Notes:

Non-contractual drawings.

When designing a system, refer to the certified dimensional drawings provided with the unit or available on request.

Please refer to the certified dimensional drawings for the positioning of the fixing points, weight distribution points and centre of gravity coordinates.

Dimensions

■ POWERCIAT LX ST-HE-XE 1108 to 1358

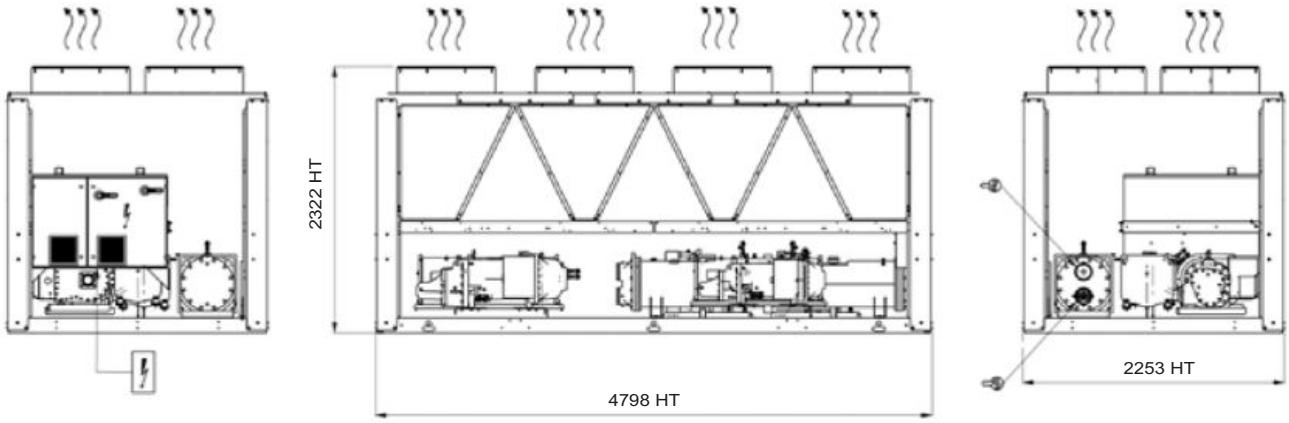

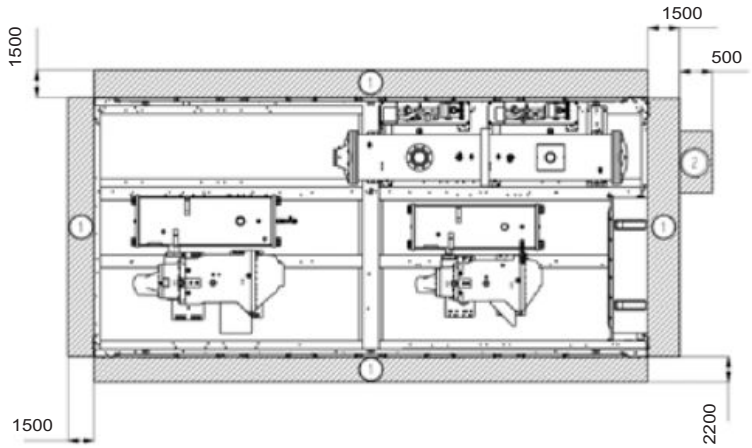

Key
All dimensions in mm

- (1) Clearance required for maintenance and air flow
- (2) Clearance recommended for coil removal
- Water inlet
- Water outlet
- Air outlet, do not obstruct
- Electrical cabinet

Notes:

Non-contractual drawings.

When designing a system, refer to the certified dimensional drawings provided with the unit or available on request.

Please refer to the certified dimensional drawings for the positioning of the fixing points, weight distribution points and centre of gravity coordinates.

Dimensions

POWERCIAT LX ST-HE-XE 1528

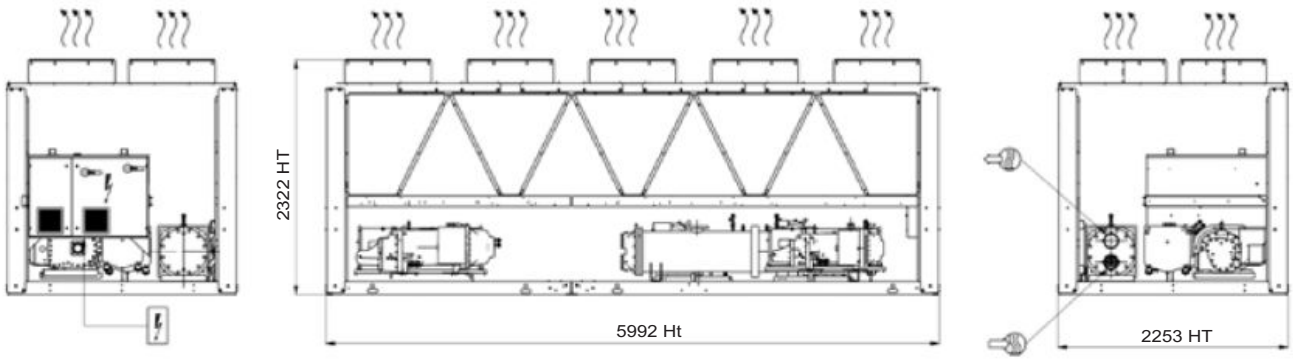

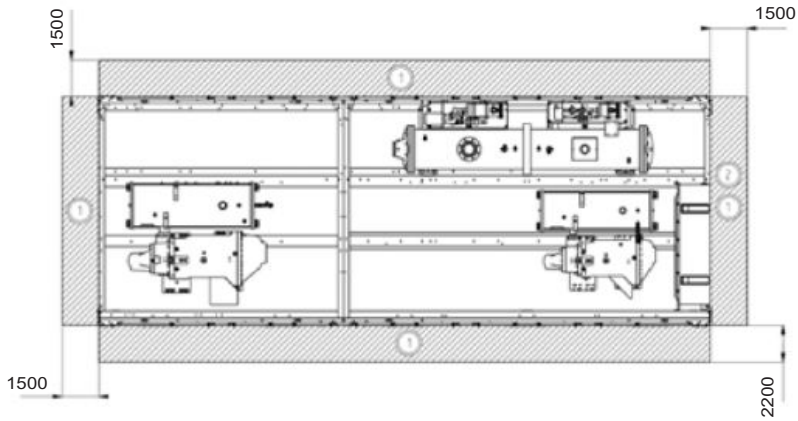

Key
All dimensions in mm

- (1) Clearance required for maintenance and air flow
- (2) Clearance recommended for coil removal
- Water inlet
- Water outlet
- Air outlet, do not obstruct
- Electrical cabinet

Notes:

Non-contractual drawings.

When designing a system, refer to the certified dimensional drawings provided with the unit or available on request.

Please refer to the certified dimensional drawings for the positioning of the fixing points, weight distribution points and centre of gravity coordinates.

Dimensions

■ POWERCIAT LX ST-HE-XE 1858 to 2308

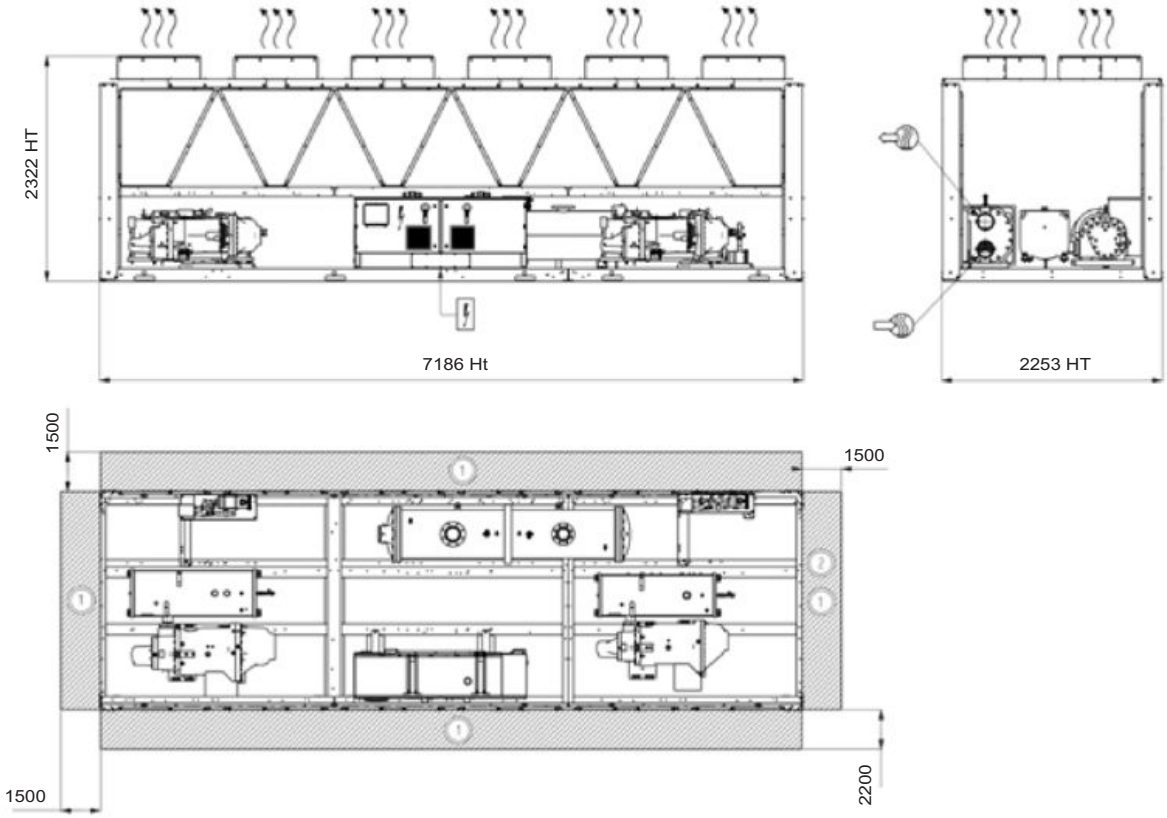

Key
All dimensions in mm

- (1) Clearance required for maintenance and air flow
- (2) Clearance recommended for coil removal
- Water inlet
- Water outlet
- Air outlet, do not obstruct
- Electrical cabinet

Notes:

Non-contractual drawings.

When designing a system, refer to the certified dimensional drawings provided with the unit or available on request.

Please refer to the certified dimensional drawings for the positioning of the fixing points, weight distribution points and centre of gravity coordinates.

Dimensions

■ POWERCIAT LX ST-HE-XE 2528 to 2628

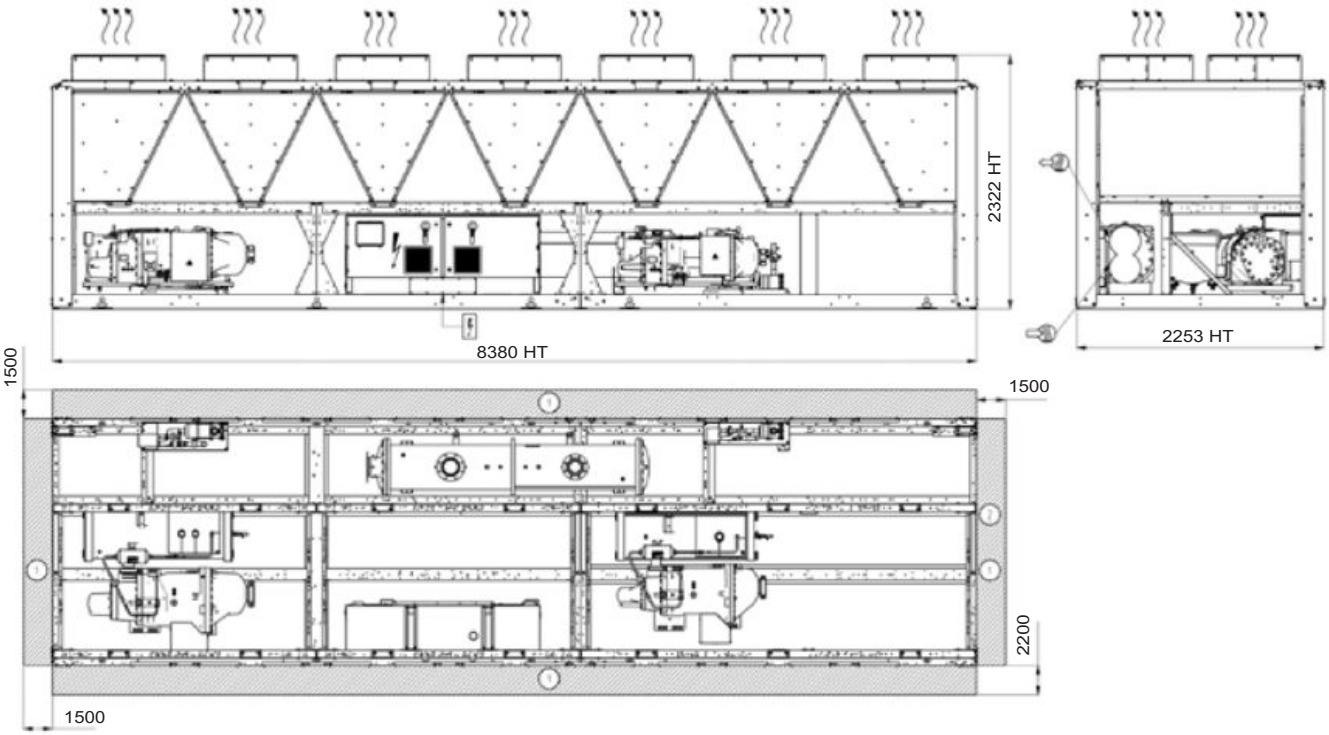

Key
All dimensions in mm

- (1) Clearance required for maintenance and air flow
- (2) Clearance recommended for coil removal
- Water inlet
- Water outlet
- Air outlet, do not obstruct
- Electrical cabinet

Notes:

Non-contractual drawings.

When designing a system, refer to the certified dimensional drawings provided with the unit or available on request.

Please refer to the certified dimensional drawings for the positioning of the fixing points, weight distribution points and centre of gravity coordinates.

Dimensions

POWERCIAT LX ST-HE-XE 3028

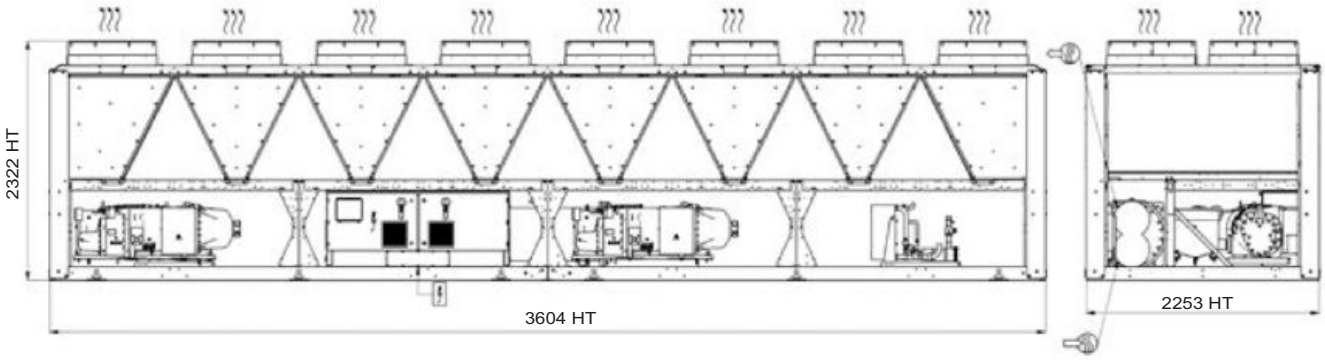

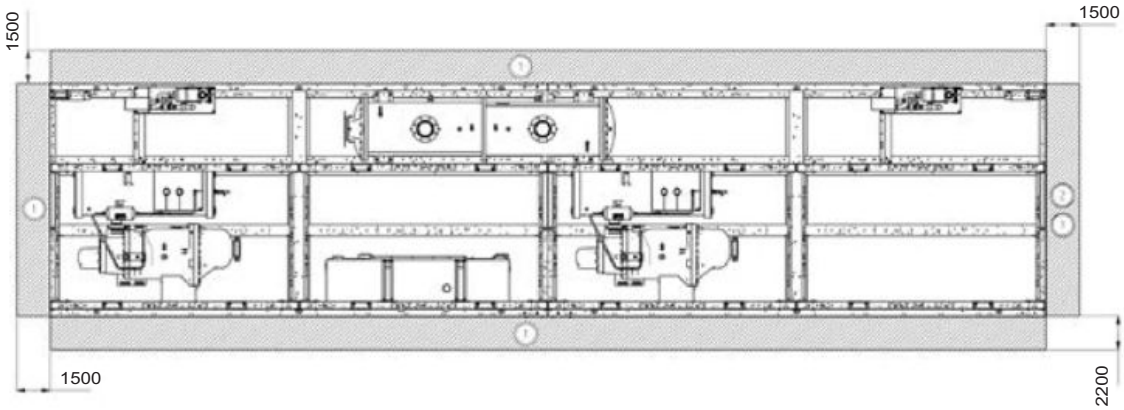

Key
All dimensions in mm

- (1) Clearance required for maintenance and air flow
- (2) Clearance recommended for coil removal
- Water inlet
- Water outlet
- Air outlet, do not obstruct
- Electrical cabinet

Notes:

Non-contractual drawings.

When designing a system, refer to the certified dimensional drawings provided with the unit or available on request.

Please refer to the certified dimensional drawings for the positioning of the fixing points, weight distribution points and centre of gravity coordinates.

Dimensions

POWERCIAT LX ST-HE-XE 3428 to 4408

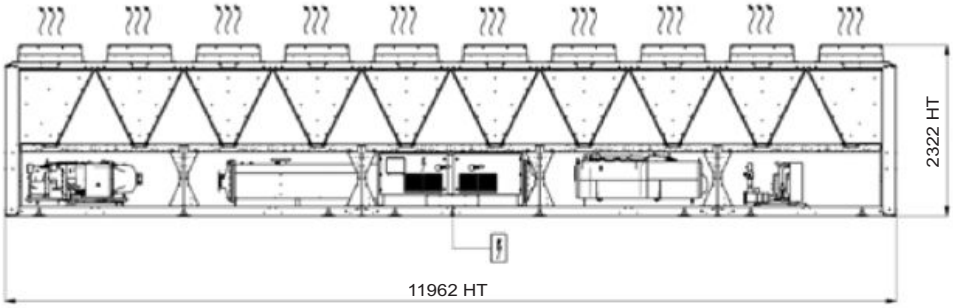

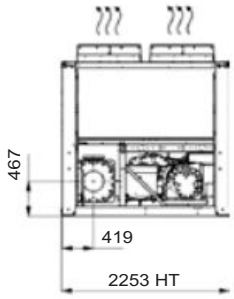

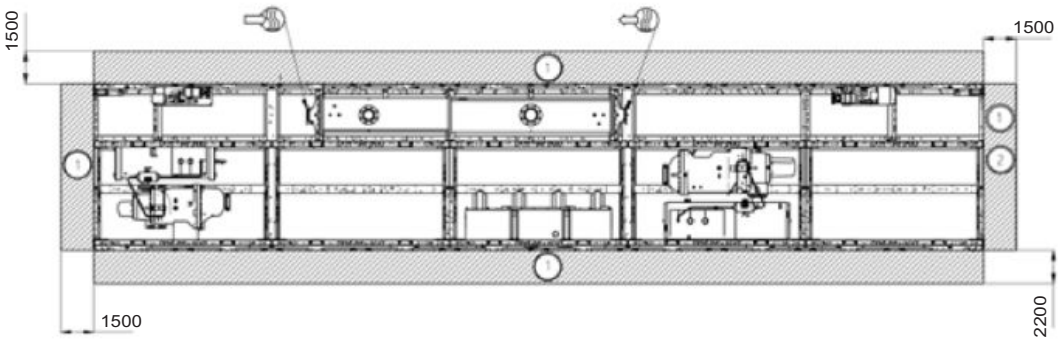

Key
All dimensions in mm

- (1) Clearance required for maintenance and air flow
- (2) Clearance recommended for coil removal
- Water inlet
- Water outlet
- Air outlet, do not obstruct
- Electrical cabinet

Notes:

Non-contractual drawings.

When designing a system, refer to the certified dimensional drawings provided with the unit or available on request.

Please refer to the certified dimensional drawings for the positioning of the fixing points, weight distribution points and centre of gravity coordinates.

Dimensions

POWERCIAT LX ST-HE-XE 4608

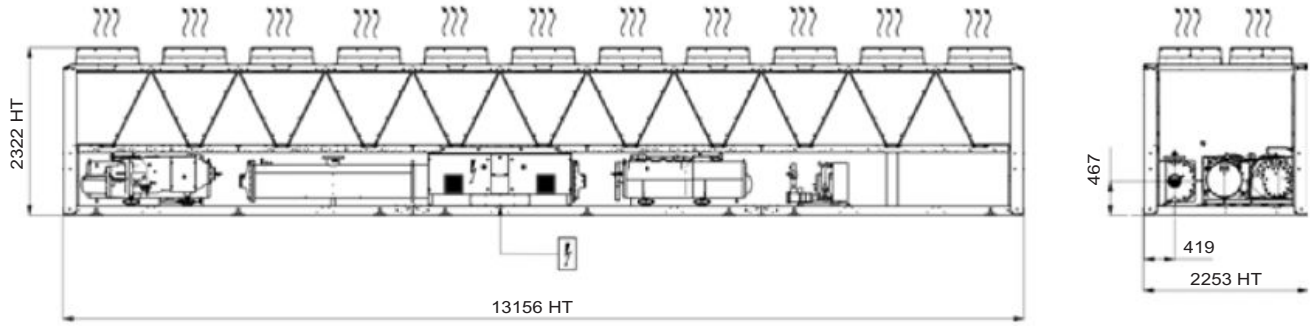

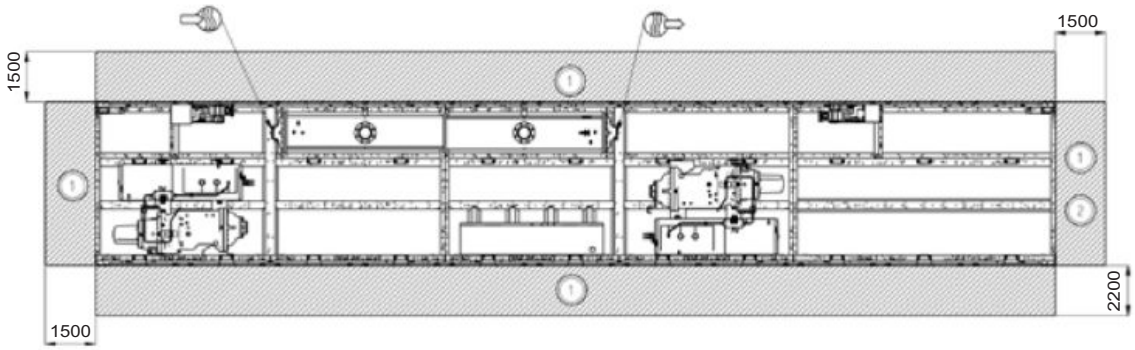

Key
All dimensions in mm

- (1) Clearance required for maintenance and air flow
- (2) Clearance recommended for coil removal
- Water inlet
- Water outlet
- Air outlet, do not obstruct
- Electrical cabinet

Notes:

Non-contractual drawings.

When designing a system, refer to the certified dimensional drawings provided with the unit or available on request.

Please refer to the certified dimensional drawings for the positioning of the fixing points, weight distribution points and centre of gravity coordinates.

DYNACIAT LGN

Water chillers
Without condenser

Compact and silent

High energy efficiency
Scroll compressors
High-efficiency brazed-plate heat exchangers
Self-adjusting electronic control

Cooling capacity: 23 to 175 kW

Cooling

Hydraulic module

Use

The latest generation of **DYNACIAT LGN** water chillers without condenser are the perfect solution for all cooling applications in the Offices, Healthcare, Industry, Administration, Shopping Centres and Collective Housing markets.

These units are designed to be installed in machine rooms that are protected against freezing temperatures and inclement weather.

For quick and easy installation, an optional hydraulic module offer is available on the evaporator side (chilled water production).

DYNACIAT is optimised to use ozone-friendly HFC R410A refrigerant.

This range guarantees compliance with the most demanding requirements for high energy efficiency and CO_2 reduction to comply with the various applicable European directives and regulations.

Range

DYNACIAT LGN series

Split system cooling only version without condenser.

Description

Units in the DYNACIAT LGN series are split-system type machines without condenser, supplied as standard with the following components:

- Hermetic SCROLL compressors
- Chilled-water evaporator with brazed plates
- Electrical power and remote control cabinet:
  - 400V-3ph-50Hz (+/-10%) general power supply + Earth
  - transformer fitted as standard on the machine for supplying the remote control circuit with 24V
- Connect Touch electronic control module
- Casing for indoor installation

The entire range complies with the following EC directives and standards:

- Machinery directive 2006/42/EC
- Electromagnetic compatibility directive 2014/30/EC
- EMC immunity and emissions EN 61800-3 'C3'
- Low voltage directive 2014/35/EU
- RoHS 2011/65/EU
- Pressure equipment directive (PED) 2014/68/EU
- Machinery directive EN 60-204 -1
- Refrigeration systems and heat pumps EN 378-2

Description

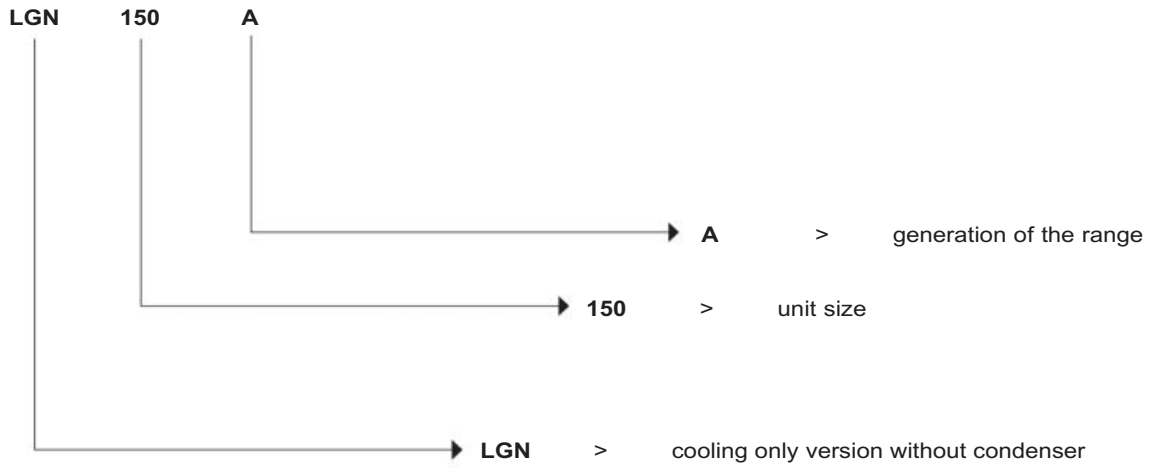

Configuration

LGN	Standard
LGN LN option	Standard Low Noise

DESCRIPTION OF THE MAIN COMPONENTS

Compressors

- Hermetic SCROLL type
- Electronic motor overheating protection
- Crankcase heater
- Mounted on anti-vibration mounts

Evaporator

- Brazed-plate exchanger
- Plate patterns optimised for high efficiency
- 19 mm armaflex thermal insulation

Refrigerating accessories

- Dehumidifier filters
- Hygroscopic sight glasses
- Electronic expansion valves
- Service valves on the liquid line

Regulation and safety instruments

- Low and high pressure sensors
- Safety valves on refrigerating circuit
- Water temperature control sensors
- Evaporator antifreeze protection sensor
- Factory-fitted evaporator water flow controller

Electrical cabinet

- Electrical cabinet with IP 23 protection rating
- A connection point without neutral
- Main safety switch with handle on front
- Control circuit transformer
- 24V control circuit
- Compressor motor circuit breaker
- Compressor motor contactors
- Connect Touch microprocessor-controlled electronic control module
- Wire numbering
- Marking of the main electrical components

Casing

Frame made from RAL7035 light grey & RAL 7024 graphite grey painted panels.

Connect Touch control module

- User interface with 4.3-inch touch screen
- Intuitive, user-friendly navigation using icons
- Clear text display of information available in 8 languages (F-GB-D-E-I-NL-P-Free)

The electronic control module performs the following main functions:

- Regulation of the water temperature (at the return or at the outlet)
- Regulation of the water temperature based on the outdoor temperature (water law)
- Regulation for low-temperature energy storage
- Second setpoint management
- Complete management of compressors with start-up sequence, timer and runtime balancing
- Self-regulating and proactive functions with adjustment of the control based on parameter drift
- In-series staged power control system on the compressors according to the thermal requirements
- Management of compressor short-cycle protection
- Phase reversal protection
- Management of occupied/unoccupied modes (according to the time schedule)
- Compressor and pump runtime balancing
- Management of the machine operation limit according to outdoor temperature
- Diagnosis of fault and operating statuses
- Management of a fault memory allowing a log of the last 50 incidents to be accessed, with operating readings taken when the fault occurs
- Master/slave management of the two machines in parallel with runtime balancing and automatic changeover if a fault occurs on one machine
- Weekly and hourly time schedule for the machine, including 16 periods of absence
- Pump standby based on demand (energy saving)
- Calculation of the water flow rate and operating pressure (hydraulic module version)
- Electronic adjustment of the water pump speed and water flow rate (variable speed pump option)
- Display of all machine parameters (3 access levels, User/Maintenance/Factory, password-protected): temperature, setpoints, pressures, water flow rate (hydraulic version), runtime.

171

Remote management

Connect Touch is equipped as standard with an RS485 port and an ETHERNET (IP) connection, offering a range of options for remote management, monitoring and diagnostics.

Using the integrated Webserver, a simple internet connection uses the unit's IP address to access the Connect Touch interface on the PC, facilitating everyday management tasks and maintenance operations.

A range of communication protocols are available: MODBUS/JBUS RTU (RS485) or TC/IP as standard, LONWORKS – BACNET IP as an option, enabling most CMS/BMS to be integrated.

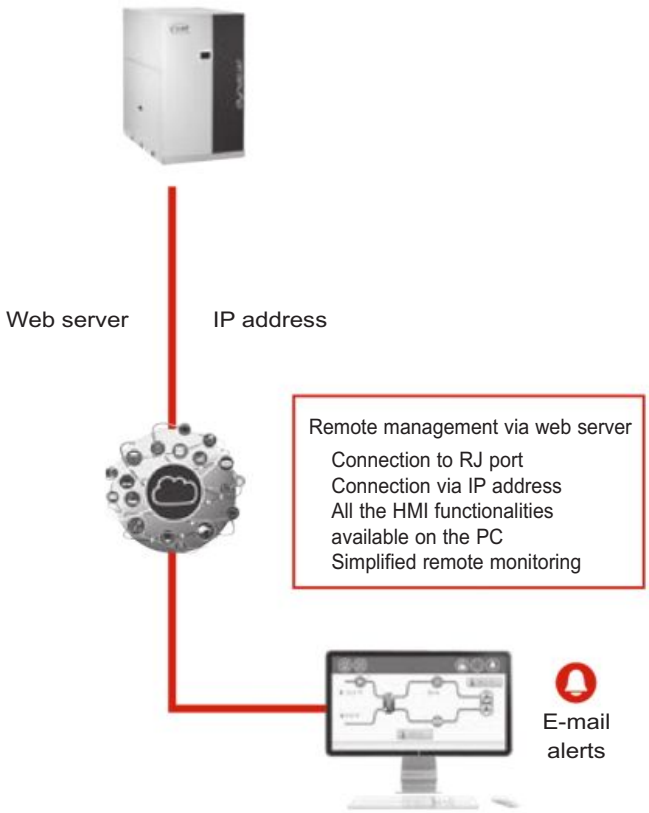

Several contacts are available as standard, enabling the machine to be controlled remotely by wired link:
- Automatic operation control: when this contact is open, the machine stops
- Setpoint 1/setpoint 2 selector: when this contact is closed, a second cooling setpoint is activated (energy storage or unoccupied mode, for example)
- Power limitation: closing the contact concerned allows the power or refrigerating consumption of the machine to be limited by stopping one or more compressors (this limit can be set with a parameter)
- Fault reporting: this contact indicates the presence of a major fault which has caused one or both refrigerating circuits to stop
- Operational status reporting indicates that the unit is in production mode.
- Switch control for the customer pump, external to the machine (on/off).

Contacts available as an option:
- Setpoint adjustable via 4-20 mA signal: this input is used to adjust the setpoint in COOLING mode.

Maintenance

Connect Touch has two maintenance reminder functions as standard, making users aware of the need to regularly perform maintenance operations and to guarantee the service life and performance of the unit. These two functions can be activated independently.
A reminder message appears on the unit's HMI screen, and stays there until it is acknowledged by the maintenance operator. The information and alert relating to these functions are available on the communication bus to be used on the CMS/BMS.

- The scheduled maintenance reminder: when activated, this function enables the period between two maintenance inspections to be set. This period may be set by the operator in either days, months or operating hours, depending on the application.
- The compulsory F-GAS sealing test maintenance reminder: when activated, this function, which is the default factory setting, enables the period between two sealing tests to be selected, according to the refrigerant charge, in compliance with the F-GAS regulations.

AVAILABLE OPTIONS

Options	Description	Advantages	LGN
Medium-temperature brine solution	Low-temperature chilled water production down to 0 °C with ethylene glycol and propylene glycol.	Covers specific applications such as ice storage and industrial processes	●
Soft Starter	Electronic starter on each compressor	Reduced start-up current	●
Master/slave operation	Unit equipped with supplementary water outlet temperature sensor kit (to be field installed) allowing master/slave operation of two units connected in parallel	Optimised operation of two units connected in parallel operation with operating time equalisation	●
Evap. single pump power/ control circuit	Unit equipped with an electrical power and control circuit for one pump evaporator side	Quick and easy installation: the control of fixed speed pumps is embedded in the unit control	Sizes 360 to 600
HP evap. single-pump	Evaporator hydraulic module equipped with high-pressure fixed-speed pump, drain valve, air vent and pressure sensors. For more details, refer to the dedicated chapter (expansion tank not included). Option with built-in safety hydraulic components available.)	Easy and fast installation (plug & play)	Sizes 360 to 600
LP evap. single-pump	Evaporator hydraulic module equipped with low pressure fixed-speed pump, drain valve, air vent and pressure sensors. For more details, refer to the dedicated chapter (expansion tank not included. Option with built-in safety hydraulic components available)	Easy and fast installation (plug & play)	●
HP evap. variable-speed single-pump	Evaporator hydraulic module equipped with high-pressure variable-speed pump, drain valve, air vent and pressure sensors. For more details, refer to the dedicated chapter (expansion tank not included. Option with built-in safety hydraulic components available)	Easy and fast installation (plug & play), significant pumping energy cost savings (more than two-thirds), tighter water flow control, improved system reliability.	●
LP VSD single-pump	Evaporator hydraulic module equipped with low -pressure variable-speed pump, drain valve, air vent and pressure sensors. For more details, refer to the dedicated chapter (expansion tank not included. Option with built-in safety hydraulic components available.)	Easy and fast installation (plug & play), significant pumping energy cost savings (more than two-thirds), tighter water flow control, improved system reliability	●
Dual high-pressure variable-speed pump.	Dual high-pressure water pump with variable speed drive (VSD), pressure transducers. Multiple possibilities of water flow control. For more details, refer to the dedicated chapter (expansion tank not included; option with built-in hydraulic safety components available)	Easy and fast installation (plug & play), significant pumping energy cost savings (more than two-thirds), tighter water flow control, improved system reliability	●
Lon gateway	Bi-directional communication board complying with Lon Talk protocol	Connects the unit by communication bus to a building management system	●
Bacnet over IP	Bi-directional high-speed communication using BACnet protocol over Ethernet network (IP)	Easy and high-speed connection by Ethernet line to a building management system. Allows access to multiple unit parameters	●
Condenser control	Control box for communication with the condenser via a bus. For OPERA condenser need to select the cabinet with option control cabinet manage by the chiller Connect'Touch control	Permits the use of an energy-efficient plug-and-play system	●
Compliance with Russian regulations	EAC certification	Compliance with Russian regulations	●
Insulation of the evap. in/out ref.lines	Thermal insulation of the evaporator entering/leaving refrigerant lines with flexible, UV resistant insulation	Prevents condensation on the evaporator entering/ leaving refrigerant lines	●

● ALL MODELS

Refer to the selection tool to find out which options are not compatible

173

Options	Description	Advantages	LGN
Low noise level	Compressor sound enclosure	Reduced sound emissions	●
Evaporator screw connection sleeves (kit)	Evaporator inlet/outlet screw connection sleeves	Allows unit connection to a screw connector	●
Replaceable filter drier	Filter drier with cartridge to replace hermetic filter	Easy filter replacement without emptying the refrigerant circuit	●
Safety hydraulic components, evap. side	Screen filter, expansion tank and relief valve integrated in the evaporator hydraulic module	Easy and fast installation (plug & play), operating safety	●
M2M supervision (accessory)	Monitoring solution which allows customers to track and monitor their equipment remotely in real time	Real-time expert technical support to improve equipment availability and reports at customer hand to monitor and optimize operating equipment.	●
Anti-vibration mounts (kit)	Elastomer antivibratils mounts to be place under the unit (Material classified B2 fire class according to DIN 4102).	Isolate unit from the building, avoid transmission of vibration and associate noise to the building. Must be used in conjunction with a flexible connection on the water side	●
Exchangers flexibles connection (kit)	Flexible connections on the exchanger water side	Easy installation. Limit transmission of vibrations on the water network	●
Flexible refrigerating sleeves	Flexibles connections on the refrigerant pipes	Easy installation. Limits the transmission of vibrations to the refrigerant network	●
Exchangers water filter (kit)	Water filter	Eliminate dust in the water network	● Without pump option
Set point adjustment by 4-20mA signal	Connections to allow a 4-20 mA signal input	Simplified energy management, enabling the setpoint to be set by a 4-20 mA external signal	●
External temperature sensor	External temperature sensor control for using weather compensation	Allow to adjust set point using weather compensation and define autorisation operation mode to external temperature	●
Free Cooling dry cooler management	Control & connections to a Free Cooling Drycooler Opera or Vextra fitted with option FC control box	Easy system management, Extended control capabilities to a drycooler used in Free Cooling mode	●

● ALL MODELS
Refer to the selection tool to find out which options are not compatible

TECHNICAL CHARACTERISTICS

DYNACIAT LGN				080	090	100	120	130	150	180	200	240	260	300
Cooling														
Standard unit		Nominal capacity	kW	22,8	27	29,1	34	39,2	42,7	54,5	59,1	67,5	78,2	87,4
Full load performances *	CS1	EER	kW/kW	3,70	3,76	3,68	3,73	3,75	3,70	3,70	3,66	3,64	3,81	3,77
	CS2	Nominal capacity	kW	31,9	37,6	40,3	47	53,2	61,3	74,5	81,2	94,9	108	121
		EER	kW/kW	5,35	5,25	5,11	5,09	4,99	5,15	5,16	5,15	5,18	5,26	5,13
Sound levels														
Standard unit														
Sound power(1)			dB(A)	67	69	69	69	70	70	72	72	72	73	73
Sound pressure at 10 m(2)			dB(A)	36	37	38	38	39	39	40	41	41	42	42
Unit with Low Noise option														
Sound power(1)			dB(A)	65	66	66	67	68	68	68	69	69	69	70
Sound pressure at 10 m(2)			dB(A)	34	35	35	35	37	37	37	37	38	38	39
Dimensions														
Length			mm	1044	1044	1044	1044	1044	1044	1474	1474	1474	1474	1474
Width			mm	600	600	600	600	600	600	880	880	880	880	880
Height			mm	901	901	901	901	901	901	901	901	901	901	901
Operating Weight (3)														
Standard unit			kg	164	171	171	177	180	185	321	324	332	339	354
Unit with evaporator with single LP pump			kg	250	258	258	263	266	271	431	435	442	449	465
Compressors				Hermetic Scroll 48.3 r/s										
Circuit A			Qty	1	1	1	1	1	1	2	2	2	2	2
Number of power stages			Qty	1	1	1	1	1	1	2	2	2	2	2
Refrigerant (3)				R410A										
Oil charge				160SZ										
Circuit A			L	3	3,3	3,3	3,3	3,3	3,6	3,3	3,3	3,3	3,3	3,6
Power control				Connect'Touch Control										
Minimum capacity			%	100	100	100	100	100	100	50	50	50	50	50
Water type heat exchanger				Direct expansion, plate heat exchanger										
Evaporator														
Water volume			L	3,3	3,6	3,6	4,2	4,6	5	8,4	9,2	9,6	10,4	12,5
Max. water-side operating pressure without hydraulic module			kPa	1000	1000	1000	1000	1000	1000	1000	1000	1000	1000	1000
Hydronic module (optional)														
Single pump (as required)				Pump, Victaulic screen filter, drain valves (water and air), pressure sensors										
Expansion tank volume			L	8	8	8	8	8	8	12	12	12	12	12
Expansion vessel pressure(4)			bar	3	3	3	3	3	3	3	3	3	3	3
Max. water-side operating pressure with hydraulic module			kPa	300	300	300	300	300	300	300	300	300	300	300
Water connections with or without hydronic module				Victaulic®										
Connections			inch	1,5	1,5	1,5	1,5	1,5	1,5	2	2	2	2	2
External diameter			mm	48,3	48,3	48,3	48,3	48,3	48,3	60,3	60,3	60,3	60,3	60,3
Casing paint				Colour code RAL 7035/RAL 7024										

* In accordance with standard EN14511-3:2013.

CS1 Cooling mode conditions: evaporator water inlet/outlet temperature 12 °C/7 °C, saturated condensing temperature 45 °C, subcooling 5 K, evaporator fouling factor 0 m2. k/W

CS2 Cooling mode conditions: evaporator water inlet/outlet temperature 23 °C/18 °C, saturated condensing temperature 45 °C, subcooling 5 K, evaporator fouling factor 0 m2. k/W

(1) in dB ref=10-12 W, 'A' weighted. Declared dual-number noise emission values in accordance with ISO 4871 (with an associated uncertainty of +/-3dB(A)). Measured in accordance with ISO 9614-1.

(2) In dB ref 20µPa, 'A' weighted. Declared dual-number noise emission values in accordance with ISO 4871 (with an associated uncertainty of +/-3dB(A)). For information, calculated from the sound power Lw(A).

(3) Values are guidelines only. Refer to the unit name plate.

(4) On delivery, the vessels are preinflated to a standard value, which may not be the optimum one for the installation. To enable the water volume to be varied as desired, adapt the inflation pressure to a value close to that which corresponds to the static height of the installation. Fill the installation with water (bleeding out any air) at a pressure more than 10 to 20 kPa higher than the vessel pressure.

TECHNICAL CHARACTERISTICS

DYNACIAT LGN				360	390	450	480	520	600
Cooling									
Standard unit		Nominal capacity	kW	106	119	132	140	159	175
Full load performances *	CS1	EER	kW/kW	3,78	3,78	3,72	3,74	3,81	3,73
	CS2	Nominal capacity	kW	146	166	185	195	218	247
		EER	kW/kW	5,24	5,17	5,12	5,32	5,17	5,26
Sound levels									
Standard unit									
Sound power(1)			dB(A)	76	77	78	76	77	78
Sound pressure at 10 m(2)			dB(A)	44	45	46	44	45	47
Dimensions									
Length			mm	1583	1583	1583	1583	1583	1583
Width			mm	880	880	880	880	880	880
Height			mm	1574	1574	1574	1574	1574	1574
Operating Weight (3)									
Standard unit			kg	630	647	665	751	774	796
Unit with evaporator with single LP pump			kg	674	691	709	797	846	868
Compressors				Hermetic scroll 48.3 rev/s					
Circuit A			Qty	3	3	3	2	2	2
Circuit B			Qty	-	-	-	2	2	2
Number of power stages			Qty	3	3	3	4	4	4
Refrigerant (3)				R-410A					
Oil charge									
Circuit A			L	3,3	3,3	3,6	3,3	3,3	3,6
Circuit B			L	-	-	-	3,3	3,3	3,6
Power control				Connect'Touch Control					
Minimum capacity			%	33%	33%	33%	25%	25%	25%
Water type heat exchanger									
Evaporator				Direct expansion, plate heat exchanger					
Water volume			L	15,18	17,35	19,04	23,16	26,52	29,05
Max. water-side operating pressure without hydraulic module			kPa	1000	1000	1000	1000	1000	1000
Hydronic module (optional)									
Single pump (as required)				Pump, Victaulic screen filter, drain valves (water and air), pressure sensors					
Expansion tank volume			L	25	25	25	35	35	35
Expansion vessel pressure(4)			bar	4	4	4	4	4	4
Max. water-side operating pressure with hydraulic module			kPa	400	400	400	400	400	400
Water connections with or without hydronic module				Victaulic®					
Connections			inch	2,5	2,5	2,5	3	3	3
External diameter			mm	73	73	73	88,9	88,9	88,9
Casing paint				Colour code RAL 7035/RAL 7024					

* In accordance with standard EN14511-3:2013.

CS1 Cooling mode conditions: evaporator water inlet/outlet temperature 12 °C/7 °C, saturated condensing temperature 45 °C, subcooling 5 K, evaporator fouling factor 0 m2. k/W

CS2 Cooling mode conditions: evaporator water inlet/outlet temperature 23 °C/18 °C, saturated condensing temperature 45 °C, subcooling 5 K, evaporator fouling factor 0 m2. k/W

(1) in dB ref=10-12 W, 'A' weighted. Declared dual-number noise emission values in accordance with ISO 4871 (with an associated uncertainty of +/-3dB(A)). Measured in accordance with ISO 9614-1.

(2) In dB ref 20µPa, 'A' weighted. Declared dual-number noise emission values in accordance with ISO 4871 (with an associated uncertainty of +/-3dB(A)). For information, calculated from the sound power Lw(A).

(3) Values are guidelines only. Refer to the unit name plate.

(4) On delivery, the vessels are preinflated to a standard value, which may not be the optimum one for the installation. To enable the water volume to be varied as desired, adapt the inflation pressure to a value close to that which corresponds to the static height of the installation. Fill the installation with water (bleeding out any air) at a pressure more than 10 to 20 kPa higher than the vessel pressure.

176

ELECTRICAL SPECIFICATIONS

LGN- Standard unit (without hydraulic module)		080	090	100	120	130	150	180	200	240	260	300
Power circuit												
Nominal voltage	V-ph-Hz	400-3-50										
Voltage range	V	360-440										
Control circuit supply		24 V via internal transformer										
Nominal unit operating current draw(3)												
Circuit A&B	A	11,4	13,8	14,7	16,5	18,1	21,2	27,6	29,4	33,1	36,4	42,5
Maximum unit power input(2)												
Circuit A&B	kW	9,2	10,8	11,7	13,7	15,1	17,1	21,5	23,3	27,3	30,3	34,2
Unit power factor at maximum capacity (2)		0,85	0,83	0,85	0,85	0,86	0,85	0,83	0,85	0,85	0,86	0,85
Unit max. operating current draw (Un-10%) (5)												
Circuit A&B	A	17,3	20,8	22	25,8	28,2	32,2	41,6	44	51,6	56,4	64,4
Maximum unit current draw (Un) (4)												
Circuit A&B - Standard unit	A	15,6	18,7	19,8	23,2	25,4	29	37,4	39,6	46,4	50,8	58
Maximum start-up current, standard unit (Un) (1)												
Circuit A&B	A	98	142	142	147	158	197	161	162	170	183	226
Maximum start-up current, unit with a soft-starter (Un) (1)												
Circuit A&B	A	53,9	78,1	78,1	80,9	86,9	108,4	96,8	97,9	104,1	112,3	137,4

LGN- Standard unit (without hydraulic module)		360	390	450	480	520	600
Power circuit							
Nominal voltage	V-ph-Hz	400-3-50					
Voltage range	V	360-440					
Control circuit supply		24 V via internal transformer					
Nominal unit operating current draw(3)							
Circuit A&B	A	49,5	54,3	63,6	66	72,4	84,8
Maximum unit power input(2)							
Circuit A&B	kW	42	44,9	51,2	55,9	59,8	68,3
Unit power factor at maximum capacity (2)		0,87	0,85	0,85	0,87	0,85	0,85
Unit max. operating current draw (Un-10%) (5)							
Circuit A&B	A	77,3	84,7	96,7	103,1	112,9	128,9
Maximum unit current draw (Un) (4)							
Circuit A&B - Standard unit	A	69,6	76,2	87	92,8	101,6	116
Maximum start-up current, standard unit (Un) (1)							
Circuit A&B	A	193,4	208,8	255	216,6	234,2	284
Maximum start-up current, unit with a soft-starter (Un) (1)							
Circuit A&B	A	127,3	137,7	166,3	150,4	163,1	195,3

(1) Maximum instantaneous starting current (maximum operating current of the smallest compressor(s) + locked rotor current of the largest compressor).
(2) Power input, at the unit's permanent operating limits (indication given on the unit's name plate).
(3) Standardised EUROVENT conditions, water type heat exchanger inlet/outlet 12 °C/7 °C, saturated condensing temperature 45 °C and subcooling 5 K.
(4) Unit maximum current at 400 V, in non-continuous operation (indicated on the unit name plate).
(5) Unit maximum current at 360 V, in non-continuous operation.

ELECTRICAL SPECIFICATIONS

Short circuit current withstand capability (TN system(1))

DYNACIAT LGN		080	090	100	120	130	150	180	200	240	260	300
Value without upstream protection												
Short time assigned current (1s) - Icw	kA eff	3	3	3	3	3	3	3	3	3	3	3
Allowable peak assigned current - Ipk	kA pk	6	6	6	6	6	6	6	6	6	6	6
Value with upstream protection												
Conditional short circuit assigned current Icc	kA eff	40	40	40	40	40	40	40	40	40	40	40
Associated Schneider circuit breaker - Compact type range(2)		NSX 100N										

DYNACIAT LGN		360	390	450	480	520	600
Value without upstream protection							
Short time assigned current (1s) - Icw	kA eff	5,5	5,5	5,5	5,5	5,5	5,5
Allowable peak assigned current - Ipk	kA pk	20	20	20	20	20	20
Value with upstream protection							
Conditional short circuit assigned current Icc	kA eff	154	154	154	154	154	154
Associated Schneider circuit breaker - Compact type range(2)		NSX 100N					

(1) Type of system earthing
(2) If another current limiting protection device is used, its time-current trip and I^2t thermal stress characteristics must be at least equivalent to those of the recommended Schneider circuit breaker.
The short-circuit withstand values given above were determined for the TN system.

INTELLIGENTLY-DESIGNED ACOUSTICS

To comply with the various restrictions on integration, the DYNACIAT has two sound finish levels enabling it to be easily integrated into a number of zones without causing disruption to users or their neighbours.

Basic version

The distinguishing feature of the DYNACIAT range is its rigorous design incorporating "noiseless" assembly techniques to reduce vibrations and sources of noise:

- New generation scroll compressors with a continuous scrolling motion to lessen vibrations
- Compressor structure separated from the unit by anti-vibration mounts
- Pipes separated from the unit structure

Low Noise option

In this version, the compressors are housed inside noise insulating jackets.

Acoustic signature

As important as the sound power level, the acoustic signature reflects the noise disturbance generated by the unit.

The installation of a variable-speed pump enables the sound level of the pump function to be reduced by adjusting the pump speed to what is strictly necessary. The soft start improves the signature and reduces nuisance noise.

With all these benefits and its two acoustic finish levels (Standard and Xtra Low Noise), the DYNACIAT ensures any environmental noise constraints can be met.

Dimensions

■ DYNACIAT LGN 80 to 150 without hydraulic module

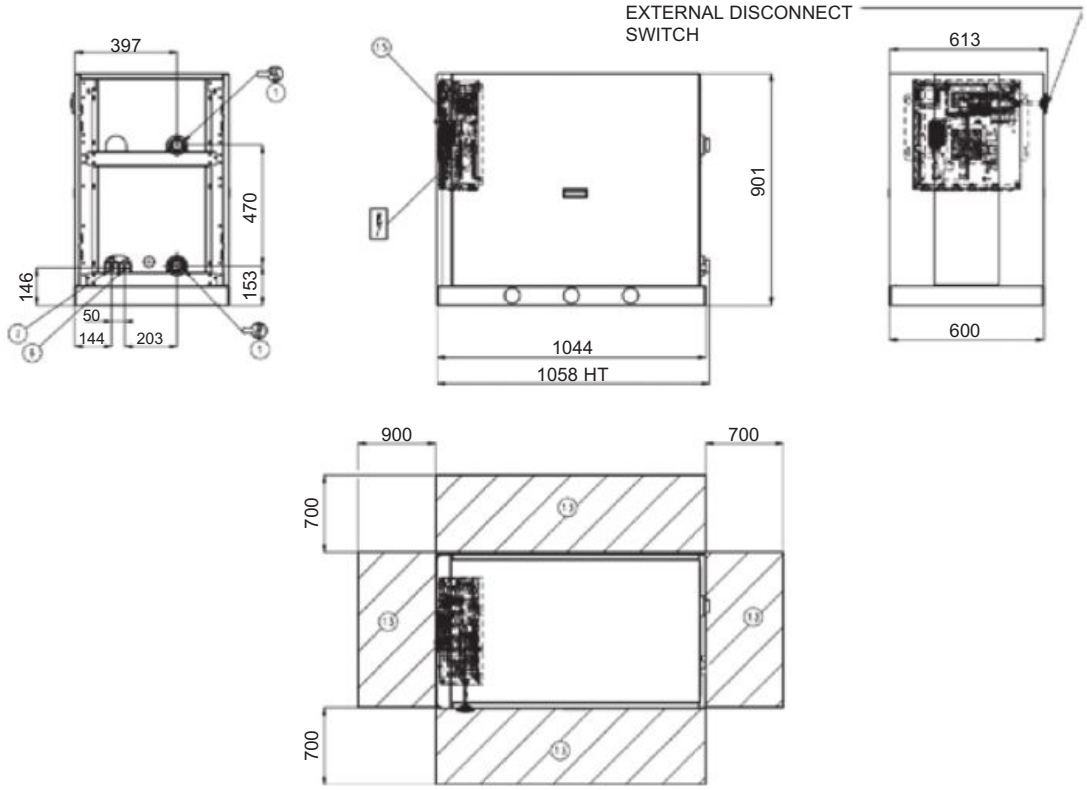

■ DYNACIAT LGN 80 to 150 with hydraulic module

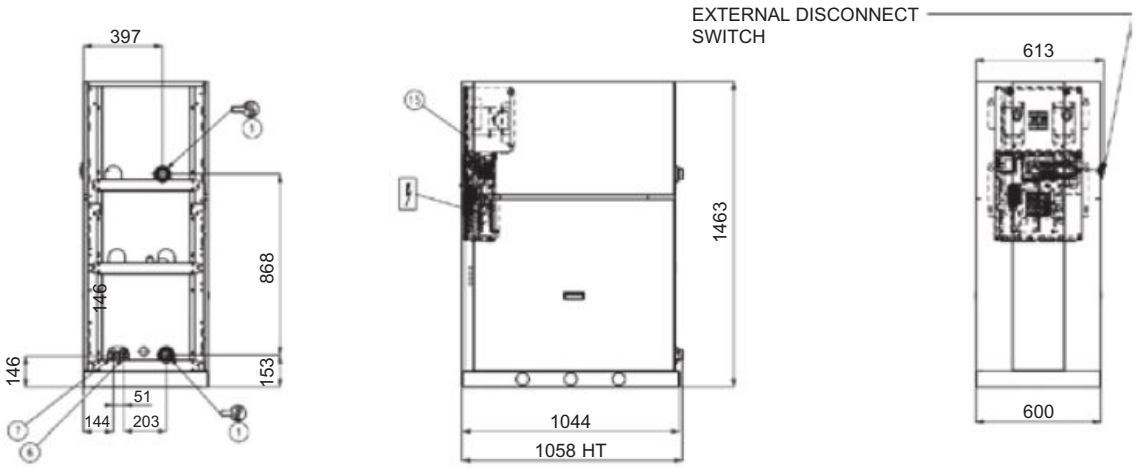

Key

All dimensions are given in mm

- ① Evaporator
- ⑬ Space required for maintenance
- ⑮ Electrical box
- ⑥ Refrigerant inlet
- ⑦ Refrigerant outlet
- Water inlet
- Water outlet
- Electrical power connection

Notes:

Non-contractual drawings.

When designing a system, refer to the certified dimensional drawings provided with the unit or available on request.

Dimensions

■ DYNACIAT LGN 180 to 300 without hydraulic module

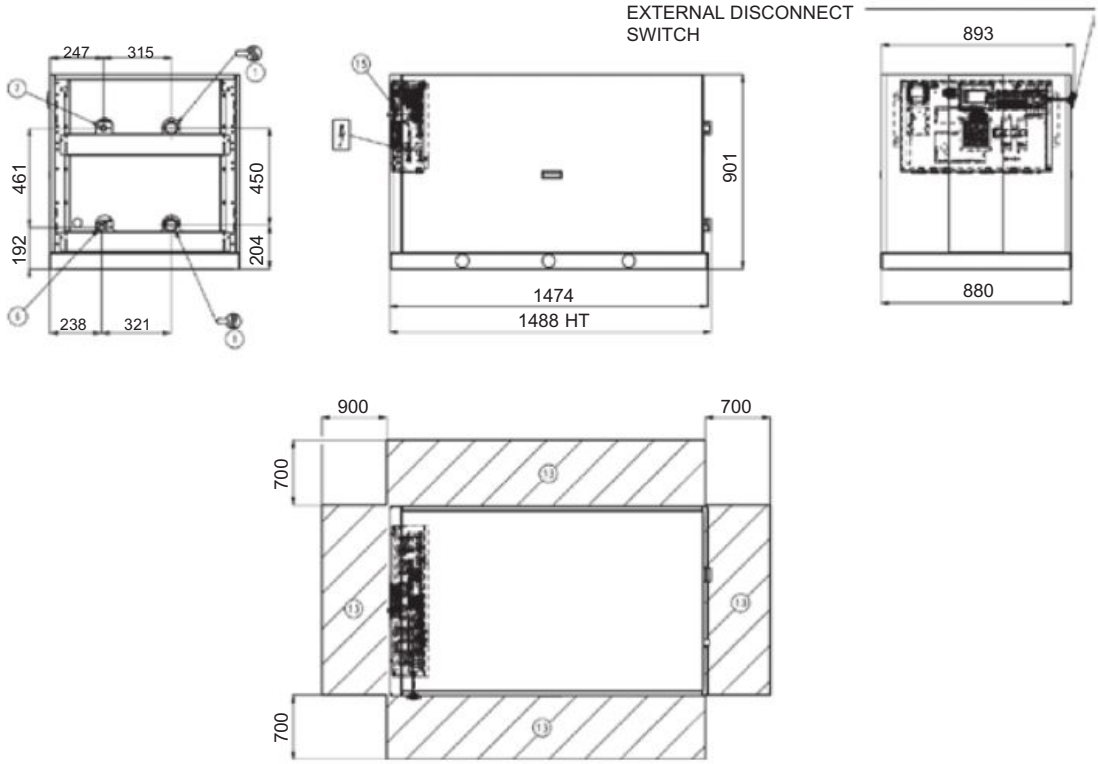

■ DYNACIAT LGN 180 to 300 with hydraulic module

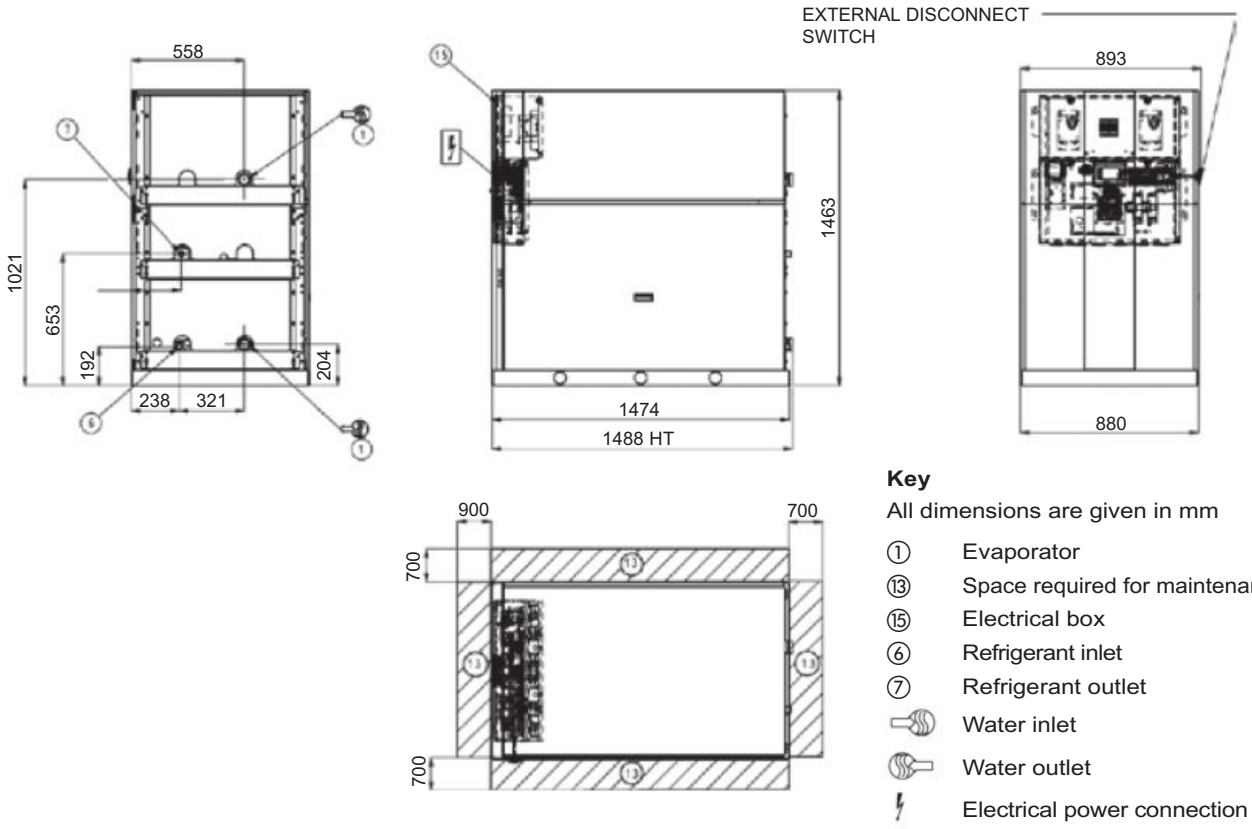

Key

All dimensions are given in mm

- ① Evaporator
- ⑬ Space required for maintenance
- ⑮ Electrical box
- ⑥ Refrigerant inlet
- ⑦ Refrigerant outlet
- Water inlet
- Water outlet
- Electrical power connection

Notes:

Non-contractual drawings.

When designing a system, refer to the certified dimensional drawings provided with the unit or available on request.

Dimensions

DYNACIAT LGN 360 to 450 without hydraulic module

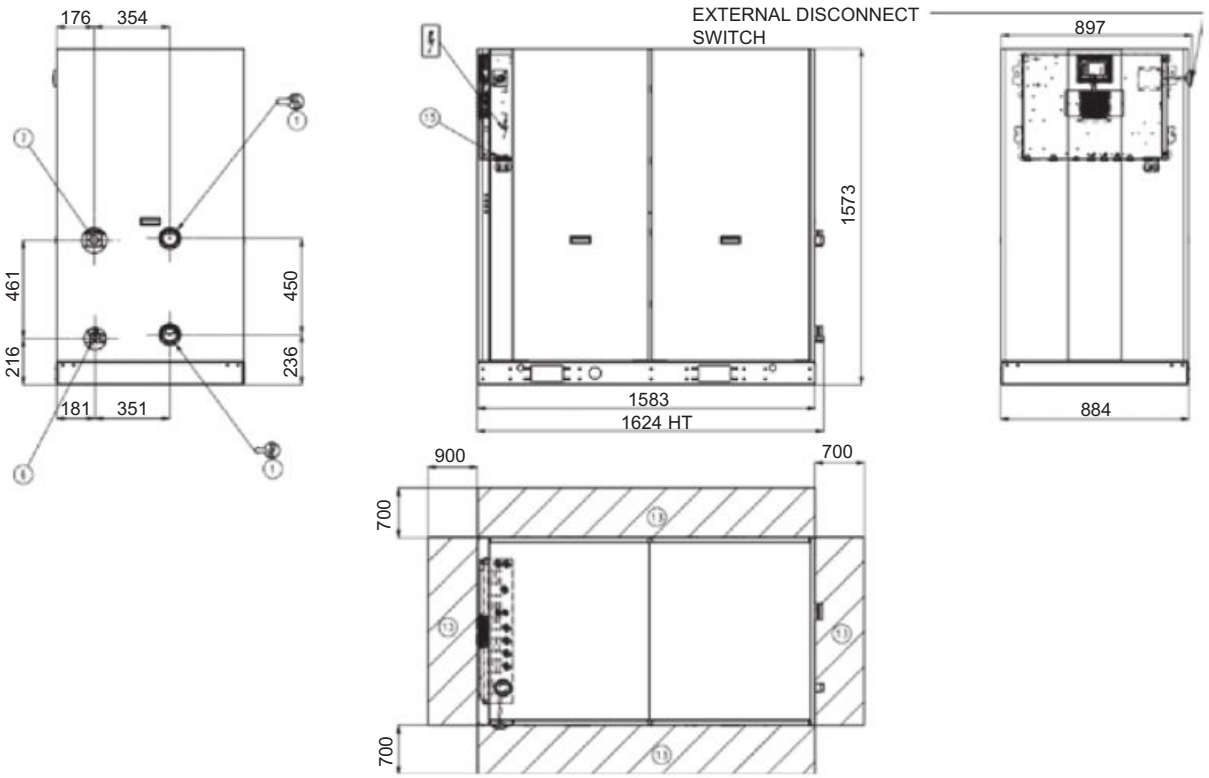

DYNACIAT LGN 360 to 450 with hydraulic module

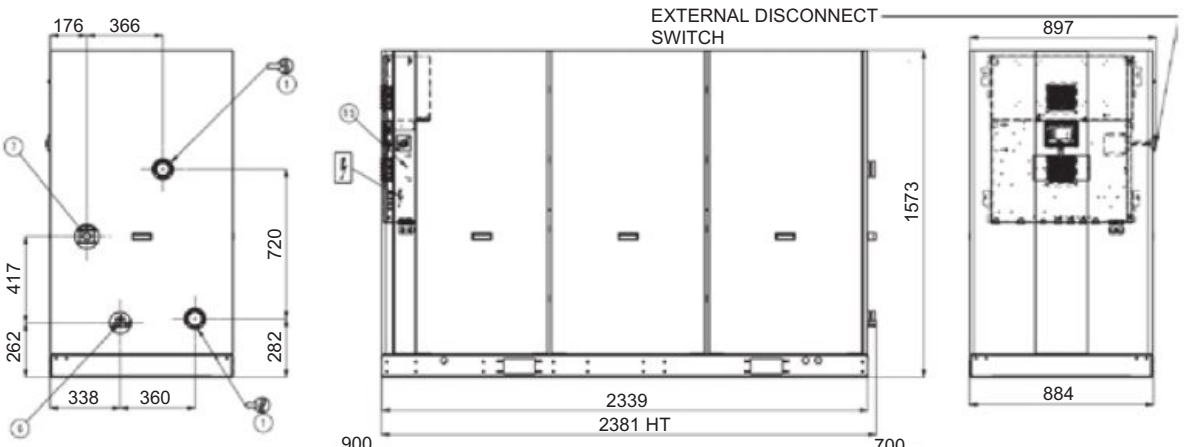

Key

All dimensions are given in mm

- ① Evaporator
- ⑬ Space required for maintenance
- ⑮ Electrical box
- ⑥ Refrigerant inlet
- ⑦ Refrigerant outlet
- Water inlet
- Water outlet
- Electrical power connection

Notes:

Non-contractual drawings.

When designing a system, refer to the certified dimensional drawings provided with the unit or available on request.

Dimensions

DYNACIAT LGN 480 to 600 without hydraulic module

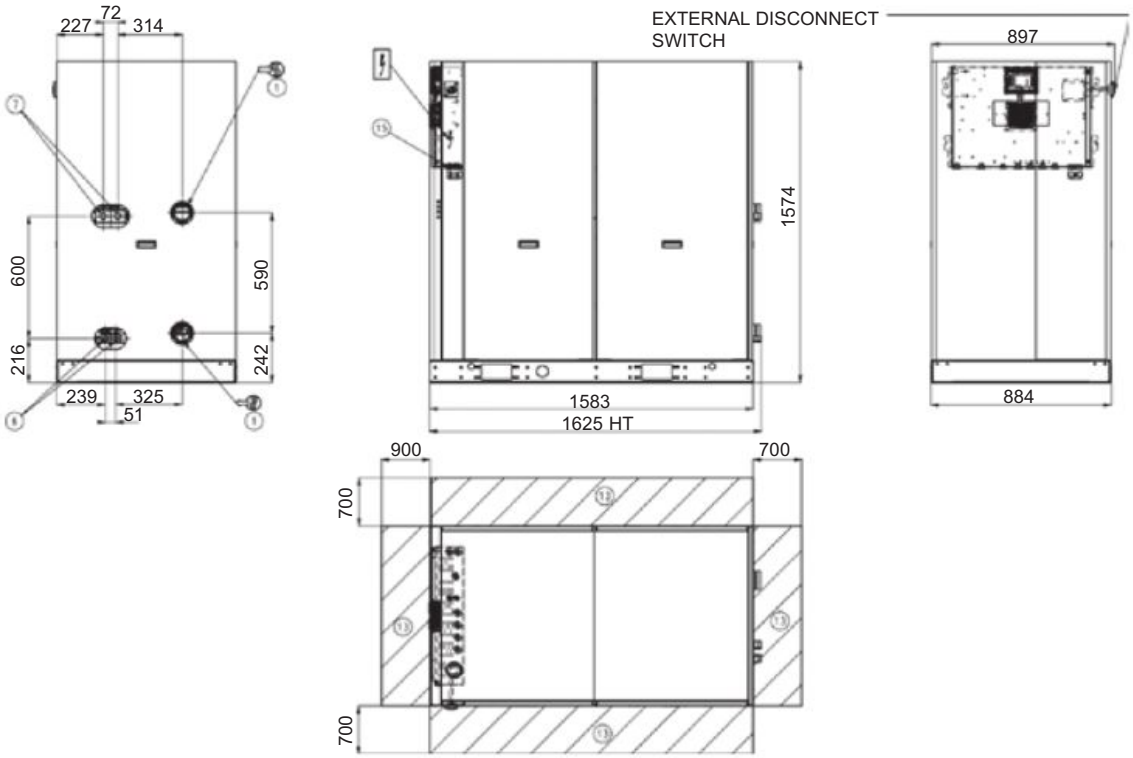

DYNACIAT LGN 480 to 600 with hydraulic module

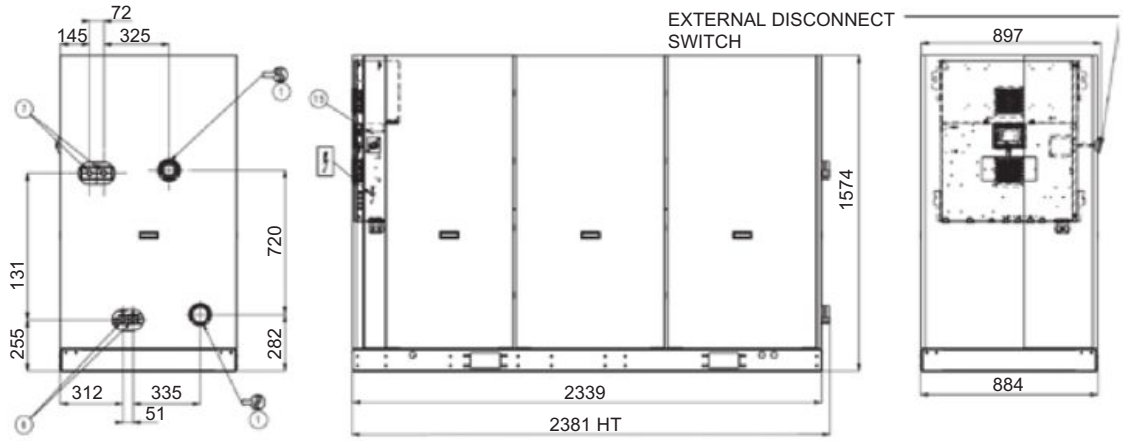

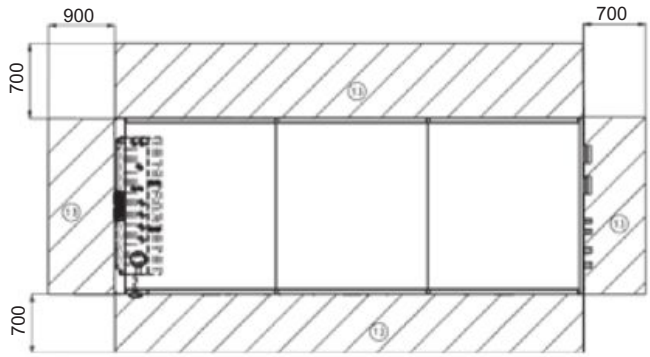

Key

All dimensions are given in mm

- ① Evaporator
- ⑬ Space required for maintenance
- ⑮ Electrical box
- ⑥ Refrigerant inlet
- ⑦ Refrigerant outlet
- Water inlet
- Water outlet
- Electrical power connection

Notes:

Non-contractual drawings.

When designing a system, refer to the certified dimensional drawings provided with the unit or available on request.

DYNACIAT POWER LGN

Split system
Water chillers

High energy efficiency
Compact and quiet
Scroll compressors
Brazed-plate heat exchangers
Self-adjusting electronic control

Cooling capacity: 200 to 450 kW

Cooling

Operation

DYNACIAT POWER LGN series single unit water chillers without condensers are machines designed for air conditioning applications in community and service sector buildings, as well as for industrial premises and processes.

These units are designed to be installed as standard in rooms that are protected against freezing temperatures and inclement weather.

Range

DYNACIAT POWER LGN series
Cooling-only model without condenser (for split system).

Description

DYNACIAT POWER LGN series models are supplied as standard with the following components:
- chilled-water evaporator
- chilled-water outlet power control
- control, automatic operation and start-up box:
  . Electrical supply: Three-phase 50 Hz - 400V (+10%/-10%) + Earth
  . Control circuit 1~50Hz 230V (+10%/-10%) (transformers fitted on unit as standard)
- casing for indoor installation

The entire DYNACIAT - DYNACIAT POWER LGN range conforms to standards and the following European EC directives:
- Machinery directive 2006/42/EC
- Electromagnetic compatibility directive 2014/30/EU
- EMC immunity and emissions EN 61800-3 'C3'
- Low voltage directive 2014/35/EU
- RoHS 2011/65/EU
- Pressure equipment directive (PED) 2014/68/EU
- Machinery directive EN 60-204 -1
- Refrigerating systems and heat pumps EN 378-2

Main components

Casing
- Removable galvanised metal panels
- RAL 7024 and RAL 7035 lacquer coating

Hermetic SCROLL compressors
- Built-in electric motor cooled by suction gases
- Motor protected by internal winding thermostat
- Placed on anti-vibration mounts
- Integrated crankcase heater

Evaporator
- Brazed-plate exchanger(s)
- End and inside plates in AISI 316 stainless steel
- High-performance, optimised plate patterns
- Thermal insulation

Condenser
- Unit without condenser
- Connection possible on CIAT OPERA-type separate air-cooled condenser
- Refrigerating sleeves available as an option

Cooling accessories
- Dehumidifier filters with rechargeable cartridges
- Hygroscopic sight glasses
- Solenoid valves on liquid refrigerant lines
- Thermostatic expansion valves (700V to 1000V models)
- Electronic expansion valves (1100V to 2400V models)
- Electronic evaporation pressure controller.

Control functions and safety devices
- Thermostatic or electronic expansion valve(s)
- Refrigerant high and low-pressure safety devices,
- Safety valves on refrigeration circuit
- Temperature and pressure sensors
- Evaporator water flow controller

Electrics box
The fully wired electrics box which houses all the electrical components and the electronic CPU board, controls the entire unit, monitors its operation, adjusts water setpoints and interfaces with an external control system.
It comprises:
- Control and power circuits
- Wire numbering
- Main safety switch with handle on front
- Control circuit transformer
- Circuit breakers on the power and control circuits
- Compressor and motor switch(es)
- Main earth connection
- Microprocessor-controlled electronic control unit
  - CONNECT2
- Alarm or information signals on free terminals

CONNECT2 electronic control module
CIAT electronic control module with microprocessor and CPU, with central automatic operation and access to internal operation states.
Features:
- Start, stop, reset or remote control
- Operating mode selector
- Outputs RS485 for CMS link (ModBus-JBus)
  - additional potential-free (dry) contact card adapter
  - remote control adapter
- Multilingual analogue LCD and LED display

Connect 2

Functions:
- Operation information displayed via:
  - multilingual clear-text messages
  - direct temperature and pressure readings
- complete management of compressors with start-up sequence, timer and runtime balancing

Master/slave Management allows two machines to be controlled on a single water loop, by alternating the master and slave according to the running time.
- Short-cycle protection
- Self-adjusting and proactive functions with adjustment of settings drift control
- Series stage system on multiple compressors reduces power according to cooling or heating demands measured from water temperature
- Monitoring of internal operation parameters
- Second setpoint management
- Setpoint adjustment by 4-20 mA signal
- Master/slave operation
- Weekly programming
- Direct readout of water temperatures
- Diagnosis of operation and fault states:
  HP/LP, water flow, compressor motor(s), frost protection
- Remote management and remote monitoring

Remote control
CONNECT2 is equipped as standard with an RS485 serial port offering a range of remote management, monitoring and diagnostic options via the communication bus.
Several contacts are available as standard, enabling the unit to be controlled remotely by cabled link:
- automatic operation control: when this contact is open, the machine stops
- setpoint 1/setpoint 2 selection: when this contact is closed, a second cold setpoint is activated (energy storage mode, for example)
- setpoint adjustable by 4-20 mA signal: this input is used to adjust the setpoint
- compressor load shedding: closing the contact or contacts concerned allows the power or cooling consumption of the machine to be limited by stopping one or more compressors
- water pump 1 and 2 control: these outputs control the contact switches for one or two water pumps
- fault reporting: this contact indicates the presence of a major fault which has caused one or both cooling circuits to stop.

Power control
Series stage output control system on the compressors

STANDARD EQUIPMENT/AVAILABLE OPTIONS

DYNACIAT - DYNACIAT POWER LGN	700V à 2400V
Safety switch	●
Control circuit transformer	●
Electrical cabinet wire numbers	●
RS485 communication interface	●
Water flow controller	●
Master/slave control of two machines	●
Ethernet gateway	●
Electronic expansion valve	●
Low Noise version (compressor casing)	▲
Xtra Low Noise version (compressor casing with noise insulation)	▲
Compressor suction shut-off valves	▲
Low-temperature glycol/water mix (0°C to -12°C)	●
Soft start	▲
Water filter on evaporator	▮
Phase controller (reversal, loss, asymmetry, over and under voltage)	▮
Anti-vibration mounts	▮
Evaporator flexible hydraulic sleeves	▮
Flexible sleeve for refrigerant pipe connection	▮
Relay board with dry contacts	▮
Energy meter	▲
LONWORKS / BACNET gateway	▮

● Supplied as standard ▲ Factory-fitted option ▮ Option supplied in kit - Not available

TECHNICAL CHARACTERISTICS

	DYNACIAT POWER LGN		700V	800V	900V	1000V	1100V	1200V	1400V	1600V
Performance	Net cooling capacity (1)	kW	203,4	235,3	263,2	293,1	323	354	401	447,9
	Net power input (2)	kW	53,6	61,7	69,8	78	86,2	94,2	107,3	120,3
	Net EER		3,79	3,81	3,77	3,76	3,75	3,76	3,74	3,72
	Discharge output		257	297	333	371,1	409,2	448,2	508,2	568,2
	Lw / Lp Standard (3)	dB(A)	89/57	90/58		89/57	90/58	91/59	95/63	96/64
	Lw / Lp Low Noise (3)	dB(A)	84/52	85/53		86/54	87/55	88/56	90/58	91/59
	Lw / Lp Xtra Low Noise (3)	dB(A)	79/47	80/48			81/49	82/50	85/53	86/54
Refrigeration circuit	Quantity		2							
	Refrigerant (GWP)		R410A (2088)							
	Refrigerant charge		Refrigerant not supplied (nitrogen charge)							
Compressor	Type		Hermetic SCROLL (2 900 rpm)							
	Quantity		4							
	Start-up mode		Direct in line in series							
	Power control	No. of stages	6	4	6	4	6	4	6	4
		%	100-78-71-50-28-21-0	100-75-50-25-0	100-78-71-50-28-21-0	100-75-50-25-0	100-78-71-50-28-21-0	100-75-50-25-0	100-78-71-50-28-21-0	100-75-50-25-0
	Power distribution per circuit C1/C2	%	50 / 50							
	Refrigerant oil type	Oil capacity	POE 160SZ							
	Oil capacity	l (cir.1)	13,4					14,4	12,6	
		l (cir.2)	13,4					14,4	12,6	
Evaporator	Type		Echangeur à plaques brasées							
	Quantity		1							
	Water content	l	20	23	26	29	32	37	50	57
	Min / max water outlet temperature	°C	-12 °C / +18 °C							
	Min/max water flow	m³/h	22/70	26/81	29/82	33/105	35/113	38/124	44/137	51/151
	Minimum system water volume	l	636	880	844	1146	1043	1346	1286	1735
	Hydraulic connections ① ②	Ø	VICTAULIC DN 100			VICTAULIC DN 125				
	Minimum system diameter	Ø	DN 100			DN 125				
	Max service pressure	bar	10 bar water side							
High pressure circuit	Type		Without condenser							
	Male gas discharge	D Ø (cir1)	1"3/8				1"5/8			
		D' Ø (cir2)	1"3/8				1"5/8			
	Male liquid return	L Ø (cir1)	1"1/8				1"3/8			
		L' Ø (cir2)	1"1/8				1"3/8			
	Max service pressure	bar	42 bar							
Dimensions	Storage temperature	°C	-20°C / +50°C							
	Length	mm	2099						2499	
	Width	mm	996							
	Height	mm	1869						1887	
Weight	Weight (empty)	kg	920	1019	1036	1148	1180	1223	1389	1462
	Weight in operation	kg	968	1072	1096	1216	1250	1311	1476	1557

(1) Net outputs for chilled water temperature +12°C/+7°C and condensation +45°C.
(2) Compressors net power input.
(3) **Lw** : overall power level as per standard ISO 3744,
Lp : overall pressure levels measured at 10 m in a free field, calculated using the formula LP=Lw-10 log S
Values calculated for a refrigerant connection 7 m in length

186

ELECTRICAL CHARACTERISTICS

DYNACIAT POWER LGN		700V	800V	900V	1000V	1100V	1200V	1400V	1600V
COMPRESSOR									
Voltage	V	400V - 3Ph - 50Hz (+10%/- 10%)							
Maximum rated current	A	140	160	182	205	218	232	266	295
Starting current (1)	A	316	334	391	414	480	494	586	615
Starting current with Soft Start option (1)	A	230	248	287	310	352	366	429	453
REMOTE CONTROL AUXILIARY CIRCUIT									
Voltage	V	230V - 1Ph - 50Hz (+10%/- 10%)							
Maximum rated current	A	0,8						1,3	
Transformer capacity	VA	160						250	
Electrics box protection rating		IP 21							
Machine protection rating		IP 21							
Breaking capacity	kA	40,5						61,5	
Max. cable section according to disconnect switch (2)	mm^2	240							
Max. cable section according to rating (3)	mm^2	95			120			185	

(1) Starting current of largest compressor + maximum current of other compressors under full load
(2) Max. cable section permitted by the disconnect switch in terms of cable diameter and connection terminals
(3) Min. cable diameter required, determined from maximum rated currents.

DIMENSIONS

DYNACIAT POWER LGN 700V to 1200V

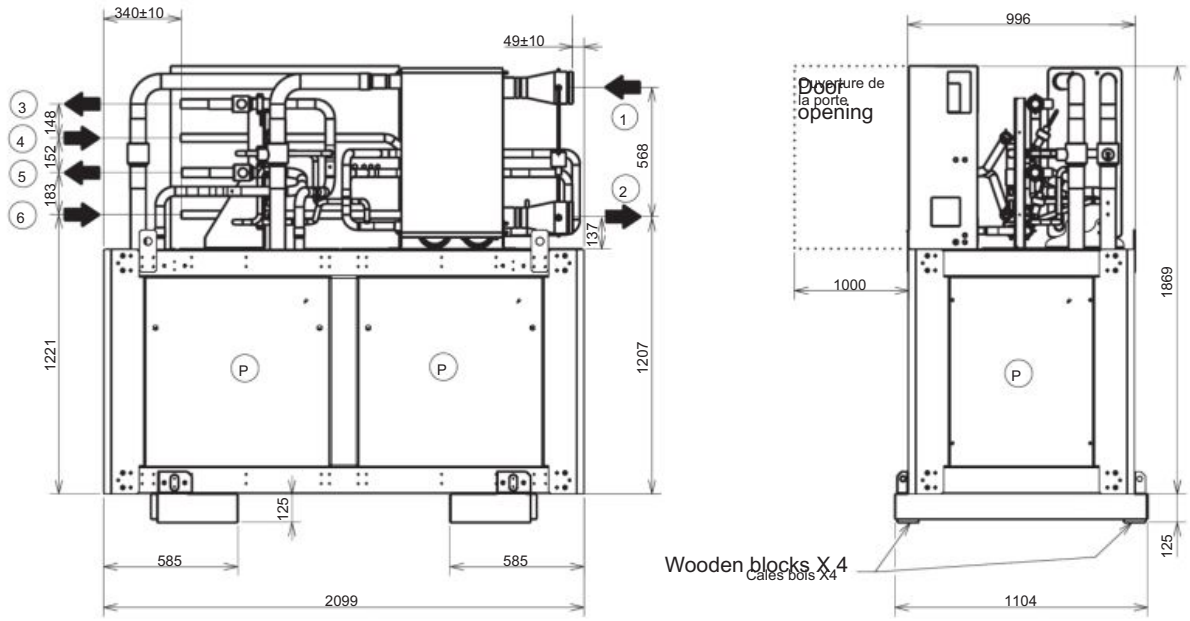

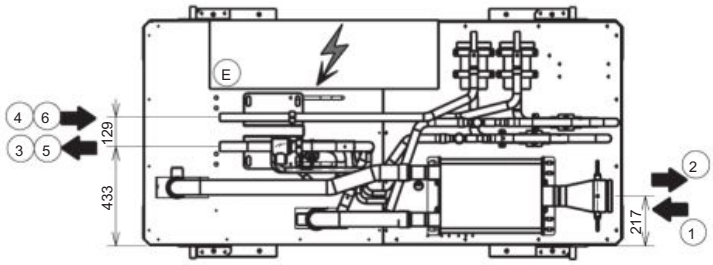

- (E) Electrical connection on the side
- (P) Noise insulation panels option
- (3)-(5) Discharge pipe(s) connection
- (4)-(6) Fluid return pipe(s) connection
- (1) Chilled water inlet
- (2) Chilled water outlet

LGN		700	800	900	1000	1100	1200
Circuit 1	5	1"3/8				1"5/8	
	6	1"1/8				1"3/8	
Circuit 2	3	1"3/8				1"5/8	
	4	1"1/8				1"3/8	
(1) (2)		DN 100 VICTAULIC			DN 125 VICTAULIC		
Weight (kg)	empty	920	1019	1036	1148	1180	1223
	in operation	968	1072	1096	1216	1250	1311

188

DIMENSIONS

DYNACIAT POWER LGN 1400V to 1600V

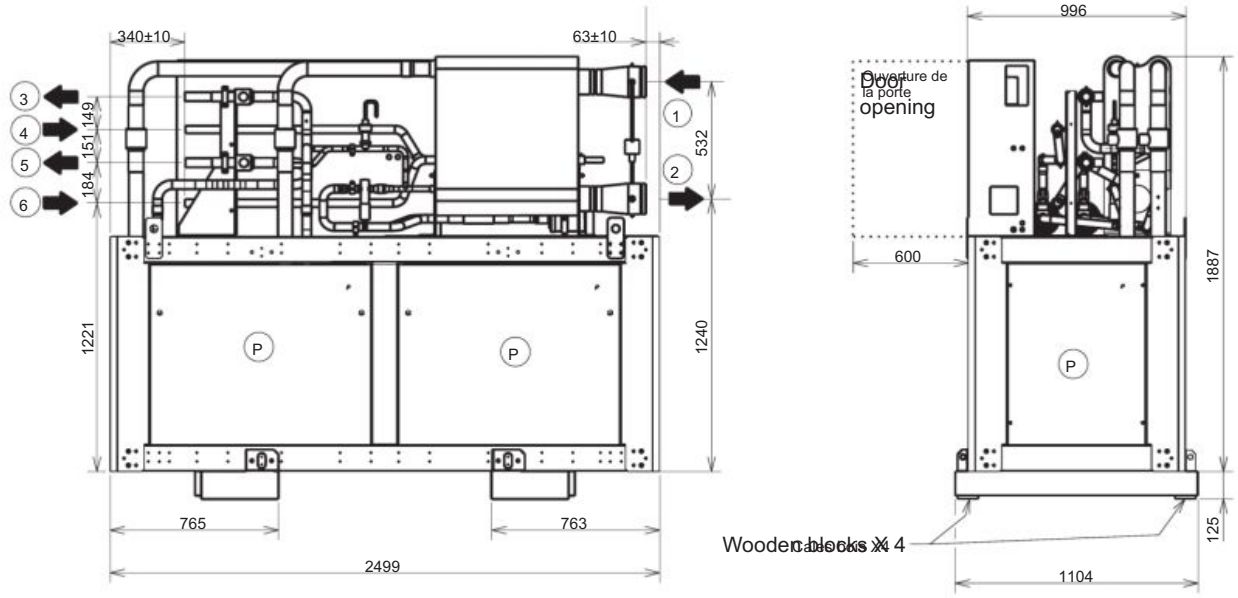

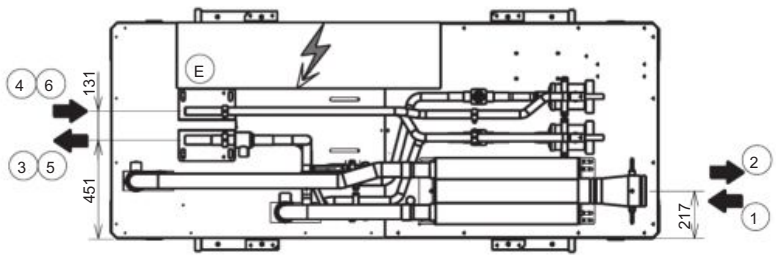

- (E) Electrical connection on the side
- (P) Noise insulation panels option
- (3)-(5) Discharge pipe(s) connection
- (4)-(6) Fluid return pipe(s) connection
- (1) Chilled water inlet
- (2) Chilled water outlet

LGN		1400	1600
Circuit 1	5	1"5/8	
	6	1"3/8	
Circuit 2	3	1"5/8	
	4	1"3/8	
(1) (2)		DN 125 VICTAULIC	
Weight (kg)	empty	1389	1462
	in operation	1476	1557

CIATCOOLER LP

Water chillers and air/water

Scroll Compressors
R-410A refrigerant
Compact and silent design
Cooling solution where an outdoor installation is impossible

Cooling capacity :17,7 to 193,5 kW

Description

The **CIATCooler LP** cooling only are compact outdoor air/water units. Available in two versions: **STD (Standard) and HEE (High Energy Efficiency).**

These units have been made for operation indoor, offers an optimal solution for all process cooling applications.

They are equipped with centrifugal fans (STD version) or electronic plug-fans (HEE version), plate exchangers, hermetic scroll compressors, and electronic control with microprocessors, components optimised for the R-410A refrigerant.

The entire range also has the option to include a desuperheater circuit that allows for the production of hot water at a temperature greater than in the condensation circuits.

All units are charged with refrigerant and are tested at the factory, verifying the correct operation of all their components.

Range

Models	STD version (Standard)	HEE version (High Energy Effi ciency)
1 circuit 1 compressor	90 / 100 / 120 / 160 / 180	90 / 100 / 120 / 160 / 180
1 circuit 1 compressor	200 / 240 / 280 / 320 / 360 420 / 480 / 600	200 / 240 / 280 / 320 / 360 420 / 480 / 600
1 circuit 1 compressor	640 / 720 / 840 / 960	640 / 720

Operation limits

Series	Cooling mode			
	Air		Water (outlet T.)	
	Max.	Min.	Max.	Min.
LP	46ºC	12ºC ❶	18ºC	5ºC ❷

❶ With control of operation condensation pressure up to -15ºC.

❷ Minimum outlet temperature. With the option of glycol water for lower temperature operation from 5ºC to -7ºC.

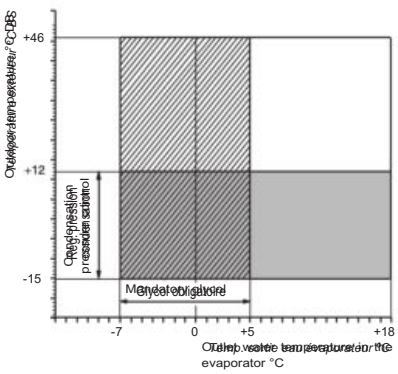

Seasonal performance

The Seasonal Energy performance Ratio (SEPR) measures the seasonal energy efficiency of liquid chillers for process applications by calculating the ratio between the annual process cooling demand and the cooler's annual energy demand.
It takes into account the energy efficiency at each outdoor temperature for the average European climate weighted by the number of hours observed for each of these temperatures. The SEPR is a new way of measuring the energy efficiency of process liquid chillers over an entire year. The new indicator provides a more realistic overview of the cooling system's energy efficiency and its actual impact on the environment (Ecodesign regulation 2015/1095).

Unit components

Casing
- Casing made of galvanised steel metal with polyester paint, colour RAL 7035. Self-supporting and isolated frame.

Outdoor circuit
- Coil(s) with copper pipes and aluminium fi ns.
- Condensate drain pan.
- Choice of air discharge position:

- HORIZONTAL (M00 assembly): Models 90 to 600 (STD version) and models 90 to 360 (HEE version).
- VERTICAL (M01 assembly): All models.

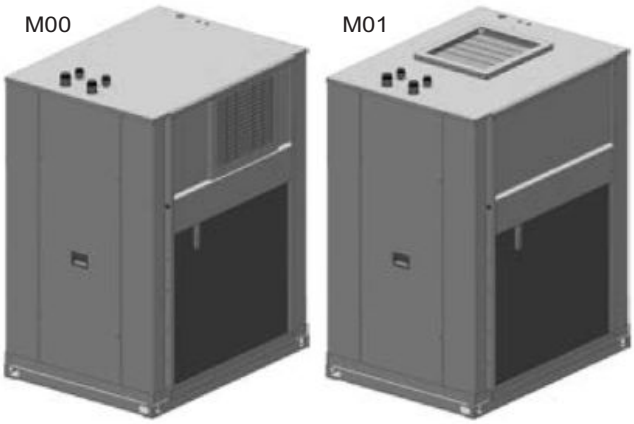

- Supply fan(s):

STD Version (Standard):
- Centrifugal fan(s) coupling by pulleys and belts.
- Electric motor(s) with tensioner, energy-effi cient IE2 motors, class F, IP55, and internal thermal protection.
- One double-intake turbine, with an impeller with front-curved blades. Greased spherical bearings, with no maintenance required.
- Choice of available pressure from 7 to 35 mm.w.c.

HEE Version (High Energy Effi ciency):
- Variable speed electronic plug-fan(s) with condensation pressure control which adapt their rotation speed to the installation requirements, thereby reducing electricity consumption, the sound level at partial charge, and improving the average seasonal output of the unit (ESEER).
- Energy-effi cient ErP 2015 motor, Class F, IP54, and internal thermal protection.

Indoor circuit
- Thermally isolated, welded stainless steel plate exchanger.

Cooling circuit
- Hermetic scroll-type compressor(s), assembled over antivibration mounts

- Control of phase equilibrium and the direction of rotation.
- Models 90 to 360 with acoustic insulating cover as standard (Low Noise version).
- Crankcase heater.

- Thermostatic expansion valve(s) with external equalisation..
- Anti-acid dehydrating fi lter(s)
- Liquid sight glass (models 200 to 960).
- Particle separator (models 200 to 960).

Electric panel
- Complete and fully wired electric panel. Insulated panel cover to prevent condensation. IP55 protection.
- Power supply with neutral and main ground connection.
- Compressor(s) and fan motor(s) contacts.

Protections
- High pressure pressostat.
- Low pressure safety device integrated into the control.
- Water fl ow controller.
- Water anti-freeze protection built into the control, depending on the temperature measured by the probe placed on the exchanger outlet.
- Water anti-freeze thermostat as additional safety.
- Compressor discharge temperature control.
- Non-return valve built into the compressor discharge.
- Compressor thermal protection.
- Main door switch.
- Automatic switch in the control circuit.
- Magnetothermic protection switches for the compressor(s) power line and fan motor.

CONNECT2 electronic control

Electronic control module with microprocessor and CPU, central automation, and access to the internal operating states.

Composition of the main board

- Input for adquisition of sensors reading and operating state of components.
- Outputs for circulation pump control, stages connection, and general failure signal.
- Connector for local control panel, installed on the unit.
- Connector for remote control panel (optional).
- Connector for relay card (optional).
- Connector for management - MULTICONNECT (optional).
- RS485 output via the MODBUS-JBUS protocol for the GTC link.

Functions

- Run, Stop, Reset or Remote control functions.
- Display of the information related to operations for direct display of multi-lingual messages in clear text.
- Direct display of the water temperatures and pressures.
- Complete management of compressors with a start-up sequence, count, and equalisation of operating times.
- Anti-short-circuit protection.
- Auto-adaptive and pro-active functions, adjusting the control in the compensation for the parameters.
- Device to reduce the stratified power being cascaded to the multi-compressors, based on the cooling or heating needs controlled by the water temperatures.
- Control of the internal operating parameters.
- Adjustment of the setpoint with a 4-20 mA signal.
- Management of a second setpoint.
- Diagnosis of the operating and failure states:
- HP/LP, water flow, compressor motor(s), anti-frost.
- Remote management and surveillance.
- Master/slave management capable of managing two units in a single water loop, alternating the Master and Slave based on the operating times.
- Hourly and weekly programming..

Local control panel

Ergonomic interface panel with multi-lingual LCD display (4 lines of 24 characters each) and LED indicators.

Functions

- Reading of pressures and temperatures.
- Operating state and fault diagnostics.
- Master/slave management of two parallel-connected machines.
- Fault memory management.
- Pumps management.
- Hourly and weekly programming.

Remote control panel (optional)

Functions and design identical to the local panel.

Relay board (optional)

Volt-free contacts card for display of the operation state and signalling of components failure. Available outputs:

- Failures: water flow, antifreeze, pump, fans, high and low pressures, compressors safety, discharge temperature.
- Operation state of compressors.

Serial RS485 outputs

- MODBUS - JBUS open protocol (standard).
- LONWORKS®, BACNET IP & BACNET MSTP protocols (optional).
- ETHERNET bridge (standard).

CONNECT2 control allows that all CIAT products can be integrated

into monitoring systems:

- Smart CIATControl
- Easy CIATControl: Optimal Water® functions /Optimal start & stop / Night cooling
- Power'Control, Cristo'Control
- CIATM2M

Options

Configuration

- VERTICAL air discharge, M01 assembly (default horizontal discharge, M00 assembly).
- In the STD version: Diff erent confi gurations of available pressure from 7 to 35 mm.w.c. (default 20 mm.w.c.).

Climatic conditions

- In units with the STD version that work in cooling with an outdoor temperature lower than 12ºC, the condensation pressure control allowing an "all seasons" operation (up to -15ºC) is mandatory. This is performed per motorized damper in the fan supply.

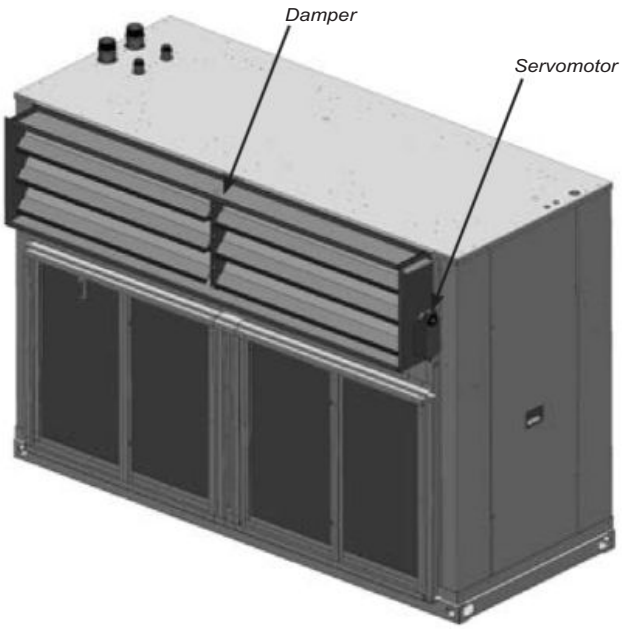

- Coils protection:
- Coil with copper pipes and copper fi ns (upon request).
- Coil with copper pipes and aluminium fi ns with polyurethane and blygold coating.
- During periods with low outdoor temperatures, anti-freeze protection for the unit:
- Electrical heaters in the condensate drain pan. Mandatory when outdoor temperatures are below 3°C.
- Operation with glycol water up to a minimum outlet temperature of -7ºC.
- Anti-freeze protection with fl exible electrical heaters around the pipe of the hydraulic circuit. In order that the unit with hydraulic module could incorporate this option, the module must be coupled to the unit, or in the case of separate, do not add additional elements in the threaded connections between module and unit.

Acoustic

- Acoustic insulating cover for compressor (Low Noise version) from the model 420. In the other models included as standard.

Energy recovery

- Desuperheater circuit which includes:
- Thermally isolated, welded stainless steel plate exchanger for working in a closed circuit in the recovery of hot gases.
- Draining valve and ball valve
- Hot water recovery control thermostat.
- Option for a 3-speed hot water circulation pump.

Installation

- Antivibration mounts made of rubber.
- Protection grille for the coil.
- Gravimetric filters in the return air. The filters frame is removable, and upon request, it is possible to supply the frame separately with the unit LP, to be joined on site.
- Flexible ducts for supply and return air supplied in a kit.
- Flexible hydraulic connections (500mm), supplied in a kit. Available for:
- Inlet / outlet of the unit.
- Inlet / outlet of the desuperheater circuit.
- Connection between the unit and the separate hydraulic module.
- For LP units filter with stainless steel mesh (500 microns), supplied in the kit.
- Cut-off and water control valves, supplied in the kit.
- High-pressure and low-pressure gauges in the cooling circuit.

Electric panel

- Compressor soft starter.
- Transformer for power supply without neutral.
- Voltage 400 / 440V - 60 Hz (upon request).
- Energy meter for monitoring of the power consumption of the installation.

CONNECT2 control / communications management

- Remote control panel.
- Kit for relay board (volt-free contacts).
- Control card with electrical support(required for more than 2 stages of electrical heaters).
- Multi-groups management - MULTICONNECT.
- Kits for bridge: LONWORKS®, BACNET IP and BACNET MSTP.
- Kit for a master / slave control probe (necessary in case of a regulation in the water outlet).

STD VERSION: TECHNICAL CHARACTERISTICS

CIATCooler LP		90V-STD	100V-STD	120V-STD	160V-STD	180V-STD	200V-STD	240V-STD	280V-STD	320V-STD	360V-STD
Cooling capacities	Net cooling capacity ❶ (kW)	17,70	21,10	25,20	32,70	36,00	43,70	49,30	55,80	68,10	74,30
	Net power input ❷ (kW)	7,75	9,15	10,00	12,60	14,40	18,80	19,70	22,40	24,90	28,70
	Net effi ciency EER	2,29	2,31	2,51	2,60	2,49	2,32	2,51	2,49	2,73	2,59
	Net cooling capacity ❸ (kW)	11,42	11,92	15,60	20,15	22,12	24,12	30,92	35,09	39,88	45,52
	Net power input ❷ (kW)	7,35	8,54	9,73	11,69	13,46	15,78	19,32	20,67	22,61	26,35
	$SEPR_{-2/-8°C}$ Process medium temp ❹ (kWh/kWh)	**2,72**	**2,57**	**2,90**	**2,93**	**2,89**	**2,85**	**2,89**	**3,01**	**3,06**	**2,99**
Outdoor circuit centrifugal fan	Nominal air fl ow (m^3/h)	6500	7000	10000	12200	12200	16000	20000	24400	24400	24400
	Available static pressure (mm.w.c.)	20									
	Number / turbines	1					2				
	Motor output (kW)	2,2	2,2	3,0	4,0	4,0	2 x 3,0	2 x 3,0	2 x 4,0	2 x 4,0	2 x 4,0
	Power input (kW) (kW) ❺	1,46	1,77	2,33	2,83	2,83	4,68	4,66	5,3	5,66	5,66
	Speed (r.p.m.)	973	1027	837	734	734	1082	837	705	734	734
Indoor circuit	Nominal water flow (m^3/h)	3,1	3,7	4,3	5,7	6,2	7,5	8,5	9,6	11,7	12,8
	Pressure drop (m.w.c.)	2,3	3,2	2,9	4,7	2,9	4,2	3,2	4,0	2,1	2,6
	Minimum water flow (m^3/h)	2,2	2,7	3,1	4,1	4,3	4,7	6,2	7,2	8,3	8,6
	Maximum water flow (m^3/h)	6,2	7,4	8,8	11,3	12,7	15,0	17,2	19,2	23,6	26,0
	Type of hydraulic connections	Gas threaded									
	Diameter of connections	1 1/4" M		1 1/2" M			2" M				
Compressor	Type	Scroll									
	No. of compressors / stages / circuits	1 / 1 / 1					2 / 2 / 1				
	Oil type	Copeland 3MAF 32 cST, Danfoss POE 160 SZ, ICI Emkarate RL 32 CF, Mobil EAL Artic 22 CC									
	Volume of oil (l)	3,0	3,3	3,3	3,3	6,2	2 x 3,3	2 x 3,3	2 x 3,3	2 x 3,3	2 x 6,2
Refrigerant	Type	R-410A									
	Global warming potential (GWP) ❻	2.088									
	Charge (kg)	5,9	6,1	6,6	6,9	7,6	9,2	12,3	12,4	14,9	15,4
	Environment impact (tCO_2eq)	12,3	12,7	13,8	14,4	15,9	19,2	25,7	25,9	31,1	32,2
Electrical characteristics	Electrical power supply	400 V / III ph / 50 Hz (±10%)									
	Power supply	3 Wires + Ground + Neutral									
Maximum absorbed current	Compressor (A)	15,2	17,3	20,5	25,4	30,5	34,6	41,0	45,9	50,8	61,0
	Fan (A)	5,0	5,0	6,9	8,9	8,9	13,8	13,8	17,8	17,8	17,8
	Control (A)	0,9	0,9	0,9	0,9	0,9	1,8	1,8	1,8	1,8	1,8
	Total (A)	21,1	23,2	28,3	35,2	40,3	50,2	56,6	65,5	70,4	80,6
Dimensions	Length (mm)	1117		1398			2113	2673			
	Width (mm)	860		860			860	860			
	Height (mm) ❼	1447		1727			1447	1727			
Weight	Empty (kg)	302	310	372	390	388	564	644	676	710	716
	In service (kg)	306	315	379	397	396	579	659	692	728	733

❶ Cooling capacity calculated in accordance with the EN-14511-2018 standard given for conditions of water inlet/outlet temperature 12°C/7°C and outdoor air temperature 35ºC.
❷ Total power input by compressor, motorised fan and electronic control under nominal conditions, calculated in accordance with the EN-14511-2018 standard. Options are not included.
❸ Cooling capacity given for conditions of water inlet/outlet temperature -2ºC/-8ºC and outdoor air temperature 35ºC.
❹ **Bold values compliant to Ecodesign Regulation (EU) No. 2015/1095 for Process application.**
❺ Energy-effi cient motors IE2.
❻ Climatic warming potential of a kilogram of fl uorinated greenhouse gas in relation to a kilogram of carbon dioxide over a period of 100 years.
❼ With the transport brackets the machine is 106 mm higher.

EUROVENT CERTIFIED PERFORMANCE
www.eurovent-certification.com

Eurovent certified values

STD VERSION: TECHNICAL CHARACTERISTICS

CIATCooler LP		420V-STD	480V-STD	600V-STD	640V-STD	720V-STD	840V-STD	960V-STD
Cooling capacities	Net cooling capacity ❶ (kW)	88,80	97,00	119,00	134,60	152,30	177,30	193,50
	Net power input ❷ (kW)	33,20	37,40	48,10	50,50	60,10	66,80	76,20
	Net effi ciency EER	2,68	2,59	2,48	2,66	2,53	2,65	2,54
	Net cooling capacity ❸ (kW)	55,69	60,72	76,48	84,36	95,44	111,43	121,79
	Net power input ❷ (kW)	31,14	34,69	43,05	50,30	57,33	62,87	69,99
	$SEPR_{-2/-8°C}$ Process medium temp ❹ (kWh/kWh)	**2,98**	**2,93**	**3,01**	**2,76**	**2,74**	**2,93**	**2,88**
Outdoor circuit centrifugal fan	Nominal air fl ow (m^3/h)	30000	30000	37500	48000	48000	60000	60000
	Available static pressure (mm.w.c.)	20						
	Number / turbines	2		3	4			
	Motor output (kW)	2 x 5,5	2 x 5,5	3 x 4,0	4 x 4,0	4 x 4,0	4 x 5,5	4 x 5,5
	Power input (kW) (kW) ❺	7,72	7,72	9,12	14,64	14,64	16,52	16,52
	Speed (r.p.m.)	737	737	751	940	940	771	771
Indoor circuit	Nominal water flow (m^3/h)	15,4	16,8	20,6	23,3	26,3	30,6	33,5
	Pressure drop (m.w.c.)	4,1	4,9	5,6	3,9	5,1	5,2	6,1
	Minimum water flow (m^3/h)	12,2	13,4	16,9	18,2	20,9	24,1	26,6
	Maximum water flow (m^3/h)	31,4	34,5	42,1	48,2	54,3	63,5	69,4
	Type of hydraulic connections	Gas threaded						
	Diameter of connections	2 1/2" F						
Compressor	Type	Scroll						
	No. of compressors / stages / circuits	2 / 2 / 1			4 / 4 / 2			
	Oil type	Copeland 3MAF 32 cST, Danfoss POE 160 SZ, ICI Emkarate RL 32 CF, Mobil EAL Artic 22 CC						
	Volume of oil (l)	4,7 + 3,3	2 x 4,7	2 x 6,8	4 x 3,3	4 x 3,3	2 x (4,7 + 3,3)	4 x 4,7
Refrigerant	Type	R-410A						
	Global warming potential (GWP) ❻	2.088						
	Charge (kg)	24,0	25,0	26,0	37,0	38,0	49,0	50,0
	Environment impact (tCO_2eq)	50,1	52,2	54,3	77,3	79,3	102,3	104,4
Electrical characteristics	Electrical power supply	400 V / III ph / 50 Hz (±10%)						
	Power supply	3 Wires + Ground + Neutral						
Maximum absorbed current	Compressor (A)	67,0	73,0	89,2	101,6	122,0	134,0	146,0
	Fan (A)	23,2	23,2	26,7	35,6	35,6	46,4	46,4
	Control (A)	1,8	1,8	1,8	1,8	1,8	1,8	1,8
	Total (A)	92,0	98,0	117,7	139,0	159,4	182,2	194,2
Dimensions	Length (mm)	3400			3600		4500	
	Width (mm)	900			1150		1200	
	Height (mm) ❼	1970			1970		1970	
Weight	Empty (kg)	1046	1122	1211	1461	1472	1949	2101
	In service (kg)	1065	1142	1232	1493	1504	1986	2138

❶ Cooling capacity calculated in accordance with the EN-14511-2018 standard given for conditions of water inlet/outlet temperature 12°C/7°C and outdoor air temperature 35ºC.
❷ Total power input by compressor, motorised fan and electronic control under nominal conditions, calculated in accordance with the EN-14511-2018 standard. Options are not included.
❸ Cooling capacity given for conditions of water inlet/outlet temperature -2ºC/-8ºC and outdoor air temperature 35ºC.
❹ **Bold values compliant to Ecodesign Regulation (EU) No. 2015/1095 for Process application.**
❺ Energy-effi cient motors IE2.
❻ Climatic warming potential of a kilogram of fl uorinated greenhouse gas in relation to a kilogram of carbon dioxide over a period of 100 years.
❼ With the transport brackets the machine is 106 mm higher.

EUROVENT CERTIFIED PERFORMANCE
www.eurovent-certification.com

Eurovent certified values

HEE VERSION: TECHNICAL CHARACTERISTICS

CIATCooler LP		90V-HEE	100V-HEE	120V-HEE	160V-HEE	180V-HEE	200V-HEE	240V-HEE	280V-HEE
Cooling capacities	Net cooling capacity ❶ (kW)	18,40	21,00	25,50	31,40	35,70	42,30	52,30	58,10
	Net power input ❷ (kW)	7,20	7,95	9,10	11,50	13,60	15,50	18,20	21,20
	Net efficiency EER	2,55	2,64	2,81	2,74	2,62	2,73	2,87	2,74
	Net cooling capacity ❸ (kW)	10,98	12,89	15,66	19,28	20,74	25,86	32,30	37,48
	Net power input ❷ (kW)	6,70	7,32	8,44	10,30	12,11	14,42	16,70	19,58
	$SEPR_{-2/-8°C}$ Process medium temp ❹ (kWh/kWh)	**2,99**	**3,28**	**3,54**	**3,34**	**3,09**	**3,63**	**3,92**	**3,76**
Outdoor circuit plug-fan	Nominal air fl ow (m^3/h)	6500	7000	10000	12200	14000	16000	20000	24400
	Nominal avail. static pressure (mmCE)	20							
	Maximum avail. static pressure (mmCE)	63,7	70,3	45,6	65,1	62,7	61,0	45,6	57,3
	Number / diameter	1 / 500		1 / 560	2 / 560				
	Motor output (kW)	2,7	2,8	3,0	2 x 3,0				2 x 4,7
	Power input (kW) ❺	1,33	1,21	1,87	2,20	2,52	2,70	3,88	5,28
	Speed (r.p.m.)	1700	1780	1500	1500				1750
Indoor circuit	Nominal water fl ow (m^3/h)	3,2	3,7	4,5	5,4	6,2	7,4	9,3	10,2
	Pressure drop (mCE)	1,6	2,1	1,6	2,4	3,1	2,5	1,4	1,6
	Minimum water flow (m^3/h)	2,8	2,9	3,8	4,1	4,6	5,7	6,7	7,5
	Maximum water flow (m^3/h)	6,6	7,4	9,1	11,3	12,8	15,0	18,4	20,7
	Type of hydraulic connections	Gas threaded							
	Diameter of connections	1 1/4" M		1 1/2" M			2" M		
Compressor	Type	Scroll							
	No. of compressors / stages / circuits	1 / 1 / 1					2 / 2 / 1		
	Oil type	Copeland 3MAF 32 cST, Danfoss POE 160 SZ, ICI Emkarate RL 32 CF, Mobil EAL Artic 22 CC							
	Volume of oil (l)	3,0	3,3	3,3	3,3	6,2	2 x 3,3	2 x 3,3	2 x 3,3
Refrigerant	Type	R-410A							
	Global warming potential (GWP) ❻	2.088							
	Charge (kg)	6,0	6,3	6,8	8,9	9,2	12,4	14,4	14,8
	Environment impact (tCO_2eq)	12,5	13,2	14,2	18,6	19,2	25,9	30,1	30,9
Electrical characteristics	Electrical power supply	400 V / III ph / 50 Hz (±10%)							
	Power supply	3 Wires + Ground + Neutral							
Maximum absorbed current	Compressor (A)	15,2	17,3	20,5	25,4	30,5	34,6	41,0	45,9
	Fan (A)	4,2	4,3	4,6	9,2	9,2	9,2	9,2	14,6
	Control (A)	0,9	0,9	0,9	0,9	0,9	1,8	1,8	1,8
	Total (A)	20,3	22,5	26,0	35,5	40,6	45,6	52,0	62,3
Dimensions	Length (mm)	1117	1398		2113		2673		
	Width (mm)	860	860		860		860		
	Height (mm) ❼	1447	1727		1447		1727		
Weight	Empty (kg)	294	351	368	450	455	633	656	662
	In service (kg)	298	358	376	465	468	648	674	680

❶ Cooling capacity calculated in accordance with the EN-14511-2018 standard given for conditions of water inlet/outlet temperature 12°C/7°C and outdoor air temperature 35ºC.
❷ Total power input by compressor, motorised fan and electronic control under nominal conditions, calculated in accordance with the EN-14511-2018 standard. Options are not included.
❸ Cooling capacity given for conditions of water inlet/outlet temperature -2ºC/-8ºC and outdoor air temperature 35ºC.
❹ **Bold values compliant to Ecodesign Regulation (EU) No. 2015/1095 for Process application.**
❺ Energy-effi cient motors IE2.
❻ Climatic warming potential of a kilogram of fl uorinated greenhouse gas in relation to a kilogram of carbon dioxide over a period of 100 years.
❼ With the transport brackets the machine is 106 mm higher.

EUROVENT CERTIFIED PERFORMANCE
www.eurovent-certification.com

Eurovent certified values

HEE VERSION: TECHNICAL CHARACTERISTICS

CIATCooler LP		320V-HEE	360V-HEE	420V-HEE	480V-HEE	600V-HEE	640V-HEE	720V-HEE
Cooling capacities	Net cooling capacity ❶ (kW)	67,50	76,80	89,90	99,20	122,70	134,50	154,10
	Net power input ❷ (kW)	24,10	28,20	31,90	36,40	46,10	48,50	56,70
	Net effi ciency EER	2,81	2,72	2,82	2,73	2,66	2,77	2,72
	Net cooling capacity ❸ (kW)	41,30	47,69	52,24	58,90	74,09	82,24	94,10
	Net power input ❷ (kW)	21,08	24,70	26,93	30,48	39,47	41,93	48,87
	$SEPR_{-2/-8°C}$ Process medium temp ❹ (kWh/kWh)	**3,68**	**3,58**	**3,66**	**3,52**	**3,42**	**3,63**	**3,47**
Outdoor circuit plug-fan	Nominal air flow (m^3/h)	24400	24400	30000	30000	34000	48000	48000
	Nominal avail. static pressure (mm.w.c.)	20						
	Maximum avail. static pressure (mm.w.c.)	66,9	66,9	60,9	60,6	64,4	62,9	62,9
	Number / diameter	2 / 560		3 / 560			4 / 560	
	Motor output (kW)	2 x 4,7		3 x 3,0		3 x 4,7	4 x 4,7	
	Power input (kW) ❺	4,78	4,78	5,37	5,37	6,72	10,08	10,08
	Speed (r.p.m.)	1750		1500		1750	1750	
Indoor circuit	Nominal water flow (m^3/h)	11,7	13,3	15,6	17,2	21,0	23,2	26,5
	Pressure drop (m.w.c.)	2,7	3,4	4,2	4,9	5,9	3,0	3,9
	Minimum water flow (m^3/h)	9,1	10,7	12,2	13,5	17,4	18,1	21,2
	Maximum water flow (m^3/h)	23,6	26,8	31,7	34,9	42,8	47,5	54,3
	Type of hydraulic connections	Gas threaded						
	Diameter of connections	2 1/2" H						
Compressor	Type	Scroll						
	No. of compressors / stages / circuits	2 / 2 / 1					4 / 4 / 2	
	Oil type	Copeland 3MAF 32 cST, Danfoss POE 160 SZ, ICI Emkarate RL 32 CF, Mobil EAL Artic 22 CC						
	Volume of oil (l)	2 x 3,3	2 x 3,3	4,7 + 3,3	2 x 4,7	2 x 6,8	4 x 3,3	4 x 3,3
Refrigerant	Type	R-410A						
	Global warming potential (GWP) ❻	2.088						
	Charge (kg)	24,0	24,0	36,0	36,0	37,0	48,0	49,0
	Environment impact (tCO_2eq)	50,1	50,1	75,2	75,2	77,3	100,2	102,3
Electrical characteristics	Electrical power supply	400 V / III ph / 50 Hz (±10%)						
	Power supply	3 Wires + Ground + Neutral						
Maximum absorbed current	Compressor (A)	50,8	61,0	67,0	73,0	89,2	101,6	122,0
	Fan (A)	14,6	14,6	13,8	13,8	21,9	29,2	29,2
	Control (A)	1,8	1,8	1,8	1,8	1,8	1,8	1,8
	Total (A)	67,2	77,4	82,6	88,6	112,9	132,6	153,0
Dimensions	Length (mm)	3400		3600			4500	
	Width (mm)	900		1150			1200	
	Height (mm) ❼	1970		1970			1970	
Weight	Empty (kg)	942	948	1263	1339	1420	1713	1724
	In service (kg)	961	966	1285	1361	1444	1749	1761

❶ Puissance frigorifique calculée conformément à la norme EN-14511-2018 pour des conditions de température entrée/sortie d'eau 12°C/7°C, température d'air extérieur à 35°C.
❷ Puissance totale absorbée par le compresseur et les motoventilateurs dans les conditions nominales, calculée conformément à la norme EN-14511-2018. Options non-incluses.
❸ Puissance frigorifique calculée pour des conditions de température entrée/sortie d'eau -2°C/-8°C, température d'air extérieur à 35°C.
❹ **Valeurs en gras conforment à la Réglementation Ecodesign (UE) No 2015/1095 pour application Process.**
❺ Moteur haute efficacité énergétique IE2.
❻ Potentiel de réchauffement climatique d'un kilogramme de gaz fluoré à effet de serre par rapport à un kilogramme de dioxyde de carbone sur une période de 100 ans.
❼ Avec les supports de transport, rajouter 106 mm.

EUROVENT CERTIFIED PERFORMANCE
www.eurovent-certification.com

Eurovent certified values

Recommended service clearance

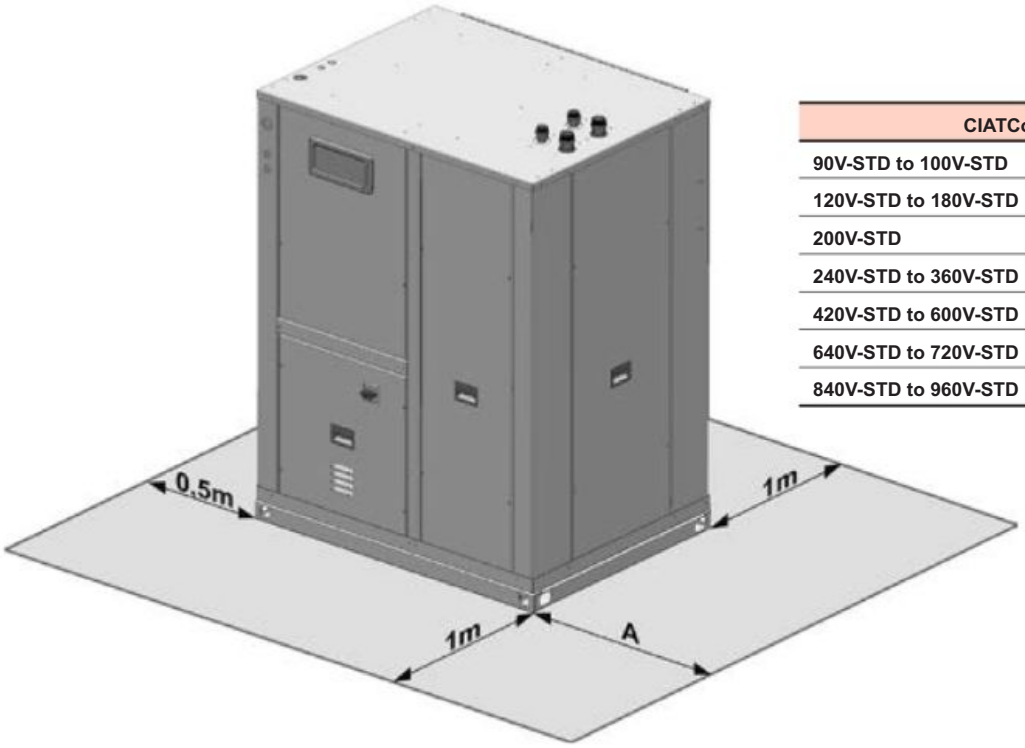

CIATCooler LP		A (m)
90V-STD to 100V-STD	90V-HEE	1,2
120V-STD to 180V-STD	100V-HEE to 120V-HEE	1,5
200V-STD	160V-HEE to 180V-HEE	1,2
240V-STD to 360V-STD	200V-HEE to 280V-HEE	1,5
420V-STD to 600V-STD	320V-HEE to 360V-HEE	1,8
640V-STD to 720V-STD	420V-HEE to 600V-HEE	1,9
840V-STD to 960V-STD	640V-HEE to 720V-HEE	2,4

Overall dimensions

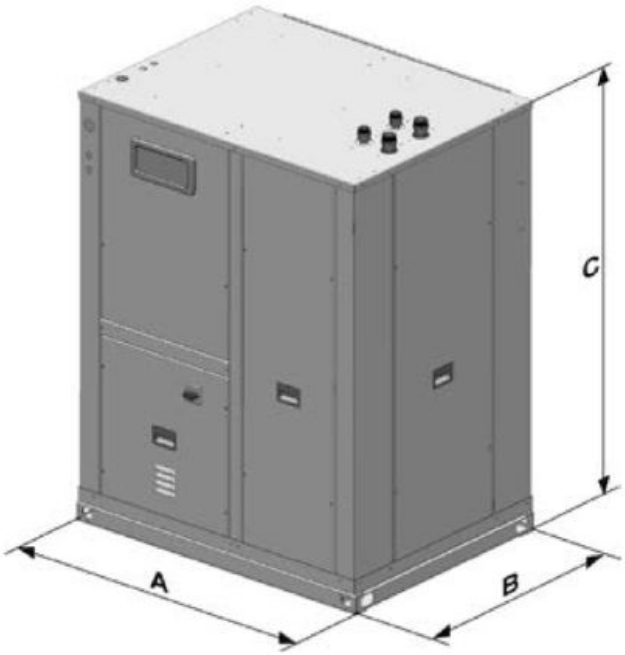

CIATCooler LP	Dimensions (mm)			Weight (kg)
	A	B	C	In service
90V-STD	1117	860	1447	306
100V-STD	1117	860	1447	315
120V-STD	1398	860	1727	379
160V-STD	1398	860	1727	397
180V-STD	1398	860	1727	396
200V-STD	2113	860	1447	579
240V-STD	2673	860	1727	659
280V-STD	2673	860	1727	692
320V-STD	2673	860	1727	728
360V-STD	2673	860	1727	733
420V-STD	3400	900	1970	1065
480V-STD	3400	900	1970	1142
600V-STD	3400	900	1970	1232
640V-STD	3600	1150	1970	1493
720V-STD	3600	1150	1970	1504
840V-STD	4500	1200	1970	1986
960V-STD	4500	1200	1970	2138

CIATCooler LP	Dimensions (mm)			Weight (kg)
	A	B	C	In service
90V-HEE	1117	860	1447	298
100V-HEE	1398	860	1727	358
120V-HEE	1398	860	1727	376
160V-HEE	2113	860	1447	465
180V-HEE	2113	860	1447	468
200V-HEE	2673	860	1727	648
240V-HEE	2673	860	1727	674
280V-HEE	2673	860	1727	680
320V-HEE	3400	900	1970	961
360V-HEE	3400	900	1970	966
420V-HEE	3600	1150	1970	1285
480V-HEE	3600	1150	1970	1361
600V-HEE	3600	1150	1970	1444
640V-HEE	4500	1200	1970	1749
720V-HEE	4500	1200	1970	1761

Condensation pressure control damper

Optional for the STD version

CIATCooler LP	Assembly	No. of dampers	Servos per damper	Total weight (kg)	A	B	C
90V-STD / 100V-STD	M00	1	1	13	150	446	895
120V-STD to 180V-STD		1	1	17	150	520	1175
200V-STD		1	1	34	150	428	1892
240V-STD to 360V-STD		1	1	43	150	550	2452
420V-STD / 480V-STD		1	2	51	150 (*)	550	2383
600V-STD		1	2	60	150 (*)	550	2750
90V-STD / 100V-STD	M01	1	1	13	150 (*)	428	550
120V-STD to 180V-STD		1	1	17	150 (*)	550	650
200V-STD		1	1	34	150 (*)	549	1550
240V-STD to 360V-STD		1	1	43	150 (*)	547	2150
420V-STD / 480V-STD		1	2	51	150 (*)	550	2383
600V-STD		1	2	60	150 (*)	550	2750
640V-STD / 720V-STD		2	1	66	150 (*)	550	1450
840V-STD / 960V-STD		2	1	79	150 (*)	550	1830

(*) In the case of vertical discharge (M01 assembly), the damper incorporates a frame (60 mm height) to fit the damper to the fan(s) outlet. This frame may be removed for duct installation.

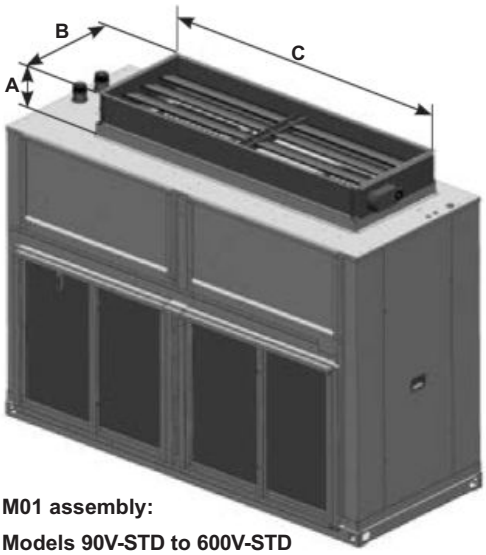

M01 assembly:
Models 90V-STD to 600V-STD

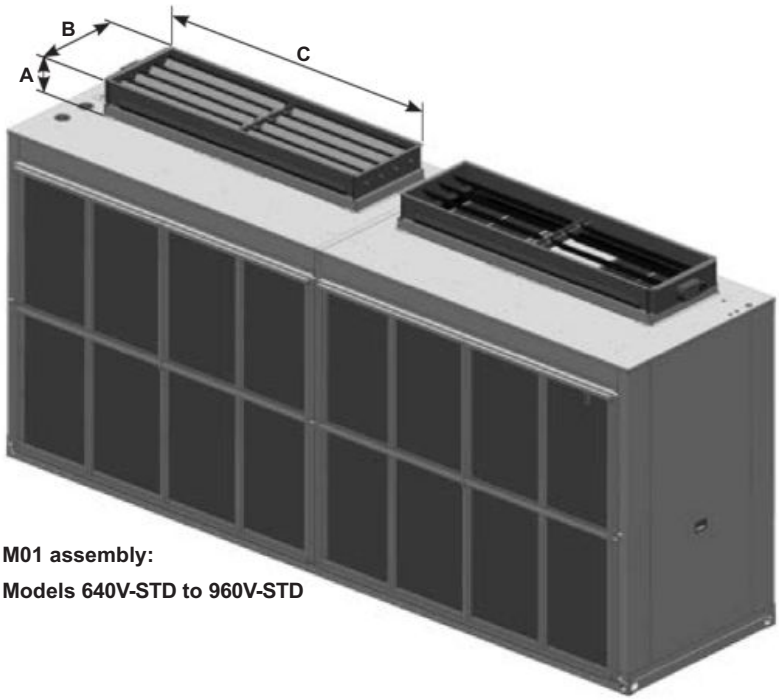

M01 assembly:
Models 640V-STD to 960V-STD

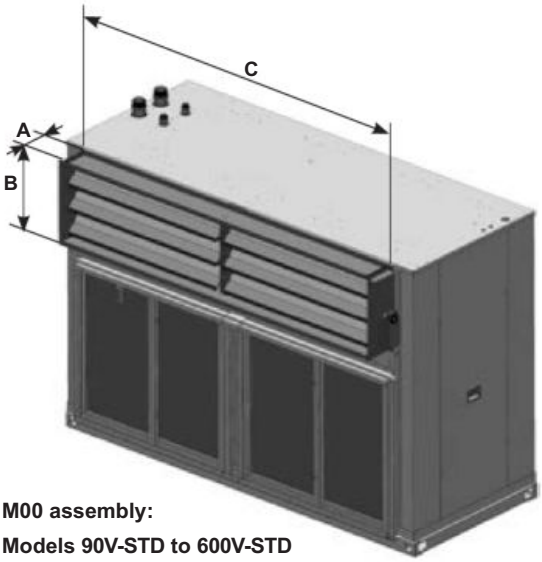

M00 assembly:
Models 90V-STD to 600V-STD

Note: By default this damper is sent attached to the CIATCooler LP unit. For duct installation it is necessary to unscrew from the unit and disconnect the electrical supply of the servomotor.

POWER'CONTROL

Energy optimization
for high-performance
energy systems

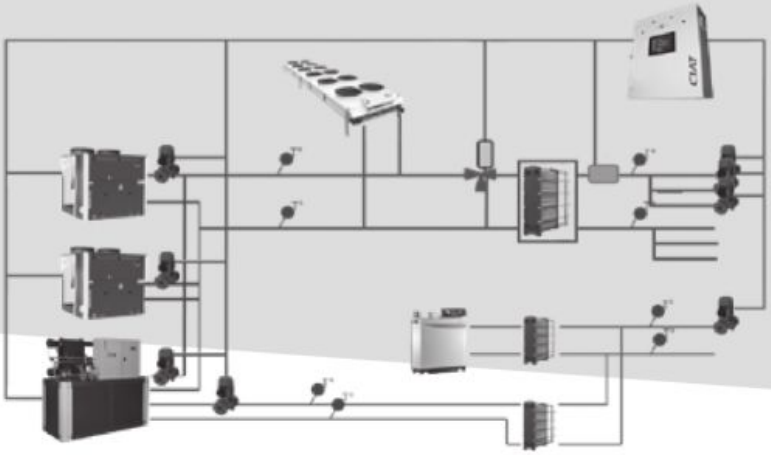

Production system management

Designed to control the entire thermal energy production system (heating and cooling)

MANAGEMENT TOOL FOR YOUR ENERGY HUB

Features

- Command & control all components on the production loop
- Maximize energy optimization
- Optimize & secure system operation
- Local and remote monitoring

Main functions

Command & control

- Controlling water chillers, heat pumps, drycoolers in heating/cooling/free cooling mode, heat recovery, balancing running time.
- Controlling and regulating all hydraulic peripherals on the production loop (pumps, 2-way and 3-way valves, etc.).
- Acquiring analogue signals (on/off contacts) and digital signals (temperature, pressure, flow rate).

Maximize energy optimization

- Optimizing system energy & maximizing free cooling and heat recovery capacity.
- Optimizing cascading of producers and their peripherals, condenser water law, etc.
- Managing equipment, alternation/back-up/priority networks.
- Detecting and reporting faults/alarms, corrective management algorithms, etc.

Secure system operation

- Intuitive human/machine communication via a graphic touch screen interface.
- Daily and seasonal programming & setpoint configuration.
- Overview of the system and component states, display of measured values, curves, etc.

Offer local monitoring

- Remote monitoring via the I-Vù software.
- Component status display.
- Overviews, curves and events logs.
- Long-term logging of measured values and events.
- Support Hotline.

Technical characteristics

- IP54 electrics box.
- Supply: 100-230 VAC, 50/60 Hz.
- Operating temperature: -10 °C to +50 °C.
- Humidity: 0 to 90% RH, non-condensing.
- Terminal strips marked with wiring diagram.
- Industrial controller.
- I-Vù monitoring software on user PC or PC panel option.
- Access for remote support via LAN (or 3G, SIM supplied by the customer).
- BMS communication via BACnet or ModBus or LON (option) protocols.

201

CIATM2M

Monitoring solution
for CIAT units

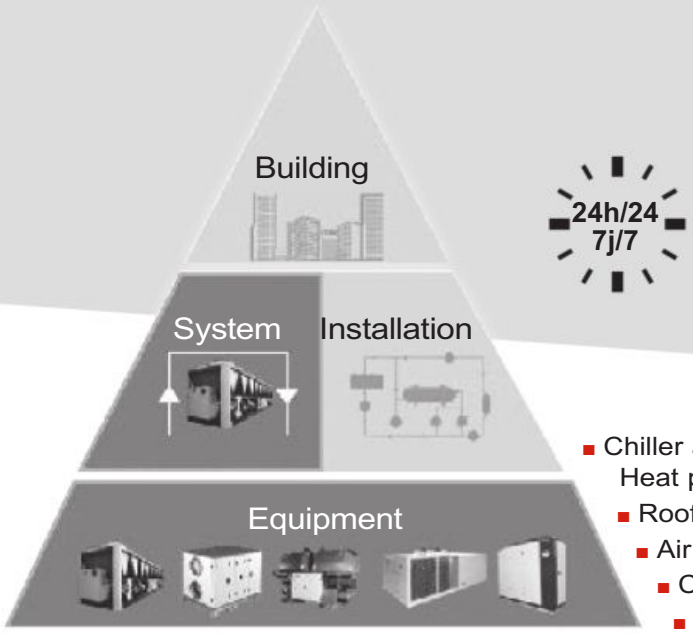

- Chiller and Heat pump
- Roof top
- Air handling unit
- Close control AC
- Drycooler

Monitoring solution

To track, monitor hvac system performance & take preventive and corrective actions remotely

Real-time monitoring

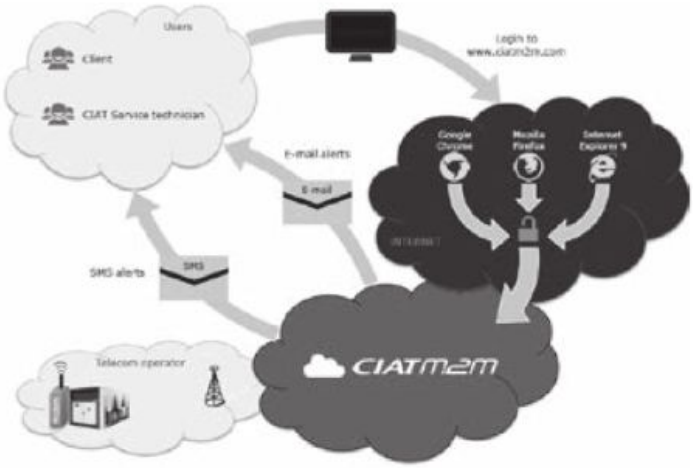

The advantages

- Better profitability
- Equipment availability
- Equipment optimal control
- Fully secured connection
- Increased responsiveness; Better technical knowledge of your site

To meet energy regulations

To achieve the 2030 energy efficiency target of ≥ 27%, European regulations encourage buildings to install control and monitoring systems.

The European Performance Building Directive (EPBD), the Energy Efficiency Directive (EED), buildings certifications as BREEAM and HQE and all other European local regulations as RT2012 in France, contribute to optimize energy usage and improve smartness indicators of the potential energy savings.

CIATM2M

Monitoring solution
for CIAT units

Real time data

Real-time data dedicated website www.ciatm2m.com

- Machine summary
- Controller dashboard
- Temperature curves and events
- Alert & fault log
- Parameters log

Alerts

Be informed

- Email alert at event on the equipment

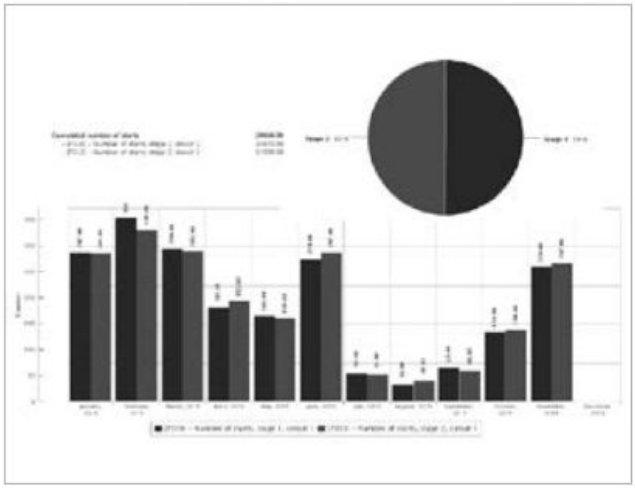

Reports

Visualize the efficiency of your installation
Get reports with expert analysis to optimise your system

Frequency

- Monthly
- Annual

Content

- Trend
- Run times
- Number of starts
- Event reports
- Preventive maintenance actions
- Energy consumption (with optional energy meter)

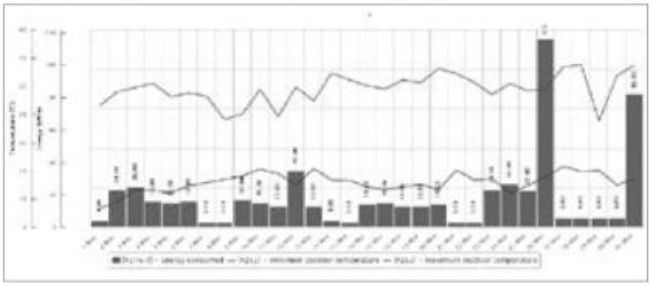

204

CIAT

HEAT PUMPS & WATER CHILLERS

WATER-COOLED UNITS

DYNACIAT LG P.209
25 to 190kW 29 to 230kW

DYNACIAT POWER P.225
220 to 720kW 250 to 820kW

HYDROCIAT LW P.233
273 to 1756kW 317 to 1989kW

HYDROCIAT TURBO LWT P.261
550 to 1600kW 650 to 1875kW

CONTROL AND SUPERVISION

POWER'CONTROL P.201

CIATM2M P.203

Cooling Heating

DYNACIAT LG

Water chillers
Heat pump

Compact et silent

High energy efficiency
Scroll compressors
High-efficiency brazed-plate heat exchangers
Self-adjusting electronic control

Cooling capacity: 25 to 190 kW
Heating capacity: 29 to 230 kW

Cooling | Heating | Hydraulic module | HFC R410A

EUROVENT CERTIFIED PERFORMANCE
www.eurovent-certification.com

UTILISATION

The latest generation of **DYNACIAT** water chillers and heat pumps are the perfect solution for all cooling and heating applications in the Offices, Healthcare, Industry, Administration, Shopping Centres and Collective Housing markets.

These units are designed to be installed in machine rooms that are protected against freezing temperatures and inclement weather.

When producing chilled water, these units can be connected to a drycooler or a water cooling tower. This range is also available in a “split system” version without a condenser (LGN series).

Connected to an underfloor heating-cooling system, comfort units or an air handling unit, DYNACIAT can heat or cool buildings by reversing the cycle on hydraulic circuits using a set of valves (hydraulic valves not supplied).

For quick and easy installation, a range of hydronic modules is available as an option on the evaporator side (for chilled water production) and the condenser side (for hot water production).

DYNACIAT is optimised to use ozone-friendly HFC R410A refrigerant.

This range guarantees compliance with the most demanding requirements for increased seasonal energy efficiency (SEER, SEPR and SCOP) and CO_2 reduction to comply with the various applicable European directives and regulations.

RANGE

DYNACIAT LG series

Cooling or heating version.

DYNACIAT LGN series

Split system cooling only version without condenser.

Description

DYNACIAT units are packaged machines supplied as standard with the following components:
- Hermetic SCROLL compressors
- Chilled-water evaporator with brazed plates
- Hot water condenser, with brazed plates
- Electrical power and remote control cabinet:
  • 400V-3ph-50Hz (+/-10%) general power supply + Earth
  • transformer fitted as standard on the machine for supplying the remote control circuit with 24V
- Connect Touch electronic control module
- Casing for indoor installation

The entire DYNACIAT range complies with the following EC directives and standards:
- Machinery directive 2006/42/EC
- Electromagnetic compatibility directive 2014/30/EC
- EMC immunity and emissions EN 61800-3 'C3'
- Low voltage directive 2014/35/EU
- RoHS 2011/65/EU
- Pressure equipment directive (PED) 2014/68/EU
- Machinery directive EN 60-204 -1
- Refrigeration systems and heat pumps EN 378-2
- Commission Regulation (EU) No. 813/2013 implementing directive 2009/125/EC setting the ecodesign requirements

Designation

LG 150 A

- **A** > generation of the range
- **150** > unit size
- **LG** > cooling or heating version
- **LGN** > cooling only version without condenser

Configuration

LG-LGN	Standard
LG-LGN LN option	Standard Low Noise

Description of the main components

Compressors
- Hermetic SCROLL type
- Electronic motor overheating protection
- Crankcase heater
- Mounted on anti-vibration mounts

Evaporator
- Brazed-plate exchanger
- Plate patterns optimised for high efficiency
- 19 mm armaflex thermal insulation

Condenser
- Brazed-plate exchanger
- Plate patterns optimised for high-efficiency
- 19 mm armaflex thermal insulation (optional)

Refrigerating accessories
- Dehumidifier filters
- Hygroscopic sight glasses
- Electronic expansion valves
- Service valves on the liquid line

Regulation and safety instruments
- Low and high pressure sensors
- Safety valves on refrigerating circuit
- Water temperature control sensors
- Evaporator antifreeze protection sensor
- Factory-fitted evaporator water flow controller

Electrical cabinet
- Electrical cabinet with IP 23 protection rating
- A connection point without neutral
- Main safety switch with handle on front
- Control circuit transformer
- 24V control circuit
- Compressor motor circuit breaker
- Compressor motor contactors
- Connect Touch microprocessor-controlled electronic control module
- Wire numbering
- Marking of the main electrical components

Casing
Frame made from RAL7035 light grey & RAL 7024 graphite grey painted panels.

Connect Touch control module
- User interface with 4.3-inch touch screen
- Intuitive, user-friendly navigation using icons
- Clear text display of information available in 6 languages (F-GB-D-E-I-NL)

The electronic control module performs the following main functions:
- Regulation of the water temperature (at the return or at the outlet)
- Regulation of the water temperature based on the outdoor temperature (water law)
- Regulation for low-temperature energy storage
- Second setpoint management
- Complete management of compressors with start-up sequence, timer and runtime balancing
- Self-regulating and proactive functions with adjustment of the control based on parameter drift
- In-series staged power control system on the compressors according to the thermal requirements
- Management of compressor short-cycle protection
- Phase reversal protection
- Management of occupied/unoccupied modes (according to the time schedule)
- Compressor and pump runtime balancing
- Management of the machine operation limit according to outdoor temperature
- Diagnosis of fault and operating statuses
- Management of a fault memory allowing a log of the last 50 incidents to be accessed, with operating readings taken when the fault occurs
- Master/slave management of the two machines in parallel with runtime balancing and automatic changeover if a fault occurs on one machine
- Weekly and hourly time schedule for the machine, including 16 periods of absence
- Pump standby based on demand (energy saving)
- Calculation of the water flow rate and operating pressure (hydraulic module version)
- Electronic adjustment of the water pump speed and water flow rate (variable speed pump option)
- Display of all machine parameters (3 access levels, User/Maintenance/Factory, password-protected): temperature, setpoints, pressures, water flow rate (hydraulic version), runtime.

211

Description of the main components

Remote management

Connect Touch is equipped as standard with an RS485 port and an ETHERNET (IP) connection, offering a range of options for remote management, monitoring and diagnostics.

Using the integrated Webserver, a simple internet connection uses the unit's IP address to access the Connect Touch interface on the PC, facilitating everyday management tasks and maintenance operations.

A range of communication protocols are available: MODBUS/JBUS RTU (RS485) or TC/IP as standard, LONWORKS – BACNET IP as an option, enabling most CMS/BMS to be integrated.

Several contacts are available as standard, enabling the machine to be controlled remotely by wired link:
- Automatic operation control: when this contact is open, the machine stops
- Heating/cooling operating mode selection
- Setpoint 1/setpoint 2 selector: when this contact is closed, a second cooling setpoint is activated (energy storage or unoccupied mode, for example)
- Power limitation: closing the contact concerned allows the power or refrigerating consumption of the machine to be limited by stopping one or more compressors (this limit can be set with a parameter)
- Fault reporting: this contact indicates the presence of a major fault which has caused one or both refrigerating circuits to stop
- Operational status reporting indicates that the unit is in production mode.

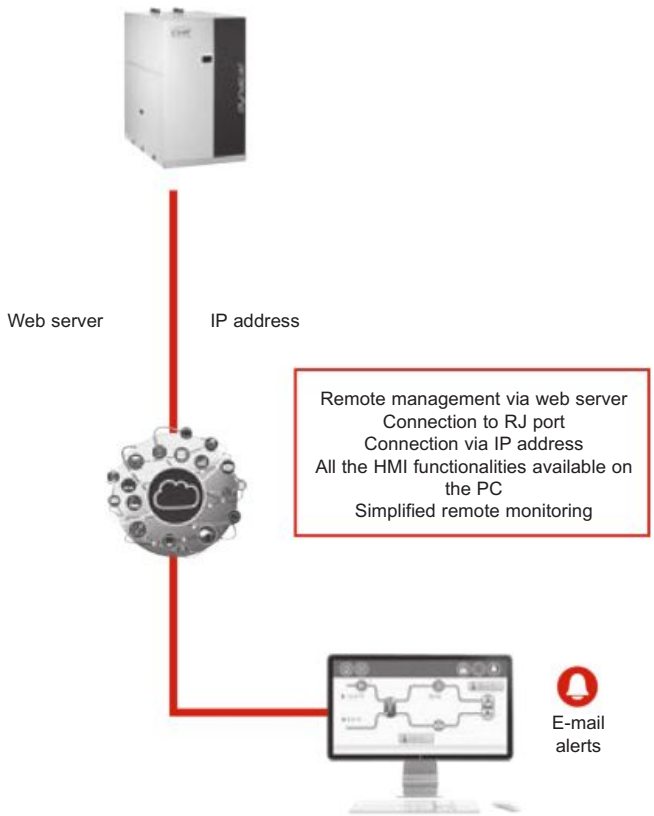

Maintenance

Connect Touch has two maintenance reminder functions as standard, making users aware of the need to regularly perform maintenance operations and to guarantee the service life and performance of the unit. These two functions can be activated independently.
A reminder message appears on the unit's HMI screen, and stays there until it is acknowledged by the maintenance operator. The information and alert relating to these functions are available on the communication bus to be used on the CMS/BMS.

- The scheduled maintenance reminder: when activated, this function enables the period between two maintenance inspections to be set. This period may be set by the operator in either days, months or operating hours, depending on the application.
- The compulsory F-GAS sealing test maintenance reminder: when activated, this function, which is the default factory setting, enables the period between two sealing tests to be selected, according to the refrigerant charge, in compliance with the F-GAS regulations

AVAILABLE OPTIONS

Options	Description	Advantages	LG
Low-temperature brine solution	Low temperature glycol solution production down to -12°C with ethylene glycol	Covers specific applications such as ice storage and industrial processes	●
Soft Starter	Electronic starter on each compressor	Reduced start-up current	●
Master/slave operation	Unit equipped with supplementary water outlet temperature sensor kit (to be field installed) allowing master/slave operation of two units connected in parallel	Optimised operation of two units connected in parallel operation with operating time equalisation	●
Evap. single pump power/control circuit	Unit equipped with an electrical power and control circuit for one pump evaporator side	Quick and easy installation: the control of fixed speed pumps is embedded in the unit control	Sizes 360 to 600
Cond. single pump power/control circuit	Unit equipped with an electrical power and control circuit for one pump condenser side	Quick and easy installation: the control of fixed speed pumps is embedded in the unit control	Sizes 360 to 600
Condenser insulation	Thermal condenser insulation	Minimizes thermal dispersions condenser side (key option for heat pump or heat recovery applications)	●
HP single-pump hydraulic module	Single high-pressure water pump, water filter, electronic water flow control, pressure transducers. For more details, refer to the dedicated chapter (expansion tank not included). Option with built-in safety hydraulic components available.)	Easy and fast installation (plug & play)	Sizes 360 to 600
LP evap. single-pump	Evaporator hydraulic module equipped with low pressure fixed-speed pump, drain valve, air vent and pressure sensors. For more details, refer to the dedicated chapter (expansion tank not included. Option with built-in safety hydraulic components available)	Easy and fast installation (plug & play)	●
HP evap. variable-speed single-pump	Evaporator hydraulic module equipped with high-pressure variable-speed pump, drain valve, air vent and pressure sensors. For more details, refer to the dedicated chapter (expansion tank not included. Option with built-in safety hydraulic components available)	Easy and fast installation (plug & play), significant pumping energy cost savings (more than two-thirds), tighter water flow control, improved sytem reliability	●
HP VSD dual-pump hydraulic mod.	Dual high-pressure water pump with variable speed drive (VSD), pressure transducers. Multiple possibilities of water flow control. For more details, refer to the dedicated chapter (expansion tank not included; option with built-in hydraulic safety components available)	Easy and fast installation (plug & play), significant pumping energy cost savings (more than two-thirds), tighter water flow control, improved sytem reliability	Sizes 360 to 600
LP VSD single-pump	Evaporator hydraulic module equipped with low -pressure variable-speed pump, drain valve, air vent and pressure sensors. For more details, refer to the dedicated chapter (expansion tank not included.Option with built-in safety hydraulic components available.)	Easy and fast installation (plug & play), significant pumping energy cost savings (more than two-thirds), tighter water flow control, improved sytem reliability	Sizes 360 to 600
Lon gateway	Bi-directional communication board complying with Lon Talk protocol	Connects the unit by communication bus to a building management system	●
Bacnet over IP	Bi-directional high-speed communication using BACnet protocol over Ethernet network (IP)	Easy and high-speed connection by Ethernet line to a building management system. Allows access to multiple unit parameters	●
Specific dry cooler control	Control box for communication with the drycooler via a bus. For OPERA drycooler need to select the cabinet with option control cabinet manage by the chiller Connect'Touch control	Permits the use of an energy-efficient plug-and-play system	●
External boiler management	Control board factory-installed on the unit to control a boiler	Extended remote control capabilities to a boiler on/off command. Permits easy control of a basic heating system	●
Electric heaters management	Control board factory-installed on the unit with additional inputs/outputs in order to manage up to 4 external heating stages (electric heaters, etc.)	Extended remote control capabilities to up to 4 electric heaters. Permits easy control of a basic heating system	●
Compliance with Russian regulations	EAC certification	Compliance with Russian regulations	●
Insulation of the evap. in/ out ref. lines	Thermal insulation of the evaporator entering/leaving refrigerant lines with flexible, UV resistant insulation	Prevents condensation on the evaporator entering/leaving refrigerant lines	●
Low noise level	Compressor sound enclosure	Reduced sound emissions	●
Evaporator screw connection sleeves (kit)	Evaporator inlet/outlet screw connection sleeves	Allows unit connection to a screw connector	●
Condenser screw connection sleeves kit	Condenser inlet/outlet screw connection sleeves	Allows unit connection to a screw connector	●
HP single-pump, condenser side	Condenser hydraulic module equipped with high pressure fixed-speed pump, drain valve, air vent and pressure sensors. Built-in safety hydraulic components available in option.	Easy and fast installation (plug & play)	Sizes 360 to 600

● ALL MODELS
Refer to the selection tool to find out which options are not compatible

213

Available options

Options	Description	Advantages	LG
LP single-pump, cond. side	Condenser hydraulic module equipped with low pressure fixed-speed pump, drain valve, air vent and pressure sensors. Built-in safety hydraulic components available in option.	Easy and fast installation (plug & play)	●
HP cond. variable-speed single-pump	Condenser hydraulic module equipped with high-pressure variable-speed pump, drain valve, air vent and pressure sensors. (expansion tank not included). Built-in safety hydraulic components available in option	Easy and fast installation (plug & play), reduced power consumption of the water circulation pump	●
HP cond. variable-speed dual-pump	Condenser hydraulic module equipped with dual high-pressure variable-speed pump, drain valve, air vent and pressure sensors. (expansion tank not included) Optional hydraulic safety components available	Easy and fast installation (plug & play), reduced power consumption of the water circulation pump	Sizes 360 to 600
LP cond. variable-speed single-pump	Condenser hydraulic module equipped with low-pressure variable-speed pump, drain valve, air vent and pressure sensors. (expansion tank not included) Optional hydraulic safety components available	Easy and fast installation (plug & play), reduced power consumption of the water circulation pump	Sizes 360 to 600
Safety hydraulic components, evap. side	Screen filter, expansion tank and relief valve integrated in the evaporator hydraulic module	Easy and fast installation (plug & play), operating safety	●
Safety hydraulic components, cond. side	Screen filter, expansion tank and relief valve integrated in the condenser hydraulic module	Easy and fast installation (plug & play), operating safety	●
M2M supervision (accessory)	Monitoring solution which allows customers to track and monitor their equipment remotely in real time	Real-time expert technical support to improve equipment availability and reports at customer hand to monitor and optimize operating equipment.	●
Anti-vibration mounts (kit)	Elastomer antivibratils mounts to be place under the unit (Material classified B2 fire class according to DIN 4102).	Isolate unit from the building, avoid transmission of vibration and associate noise to the buiding. Must be used in conjunction with a flexible connection on the water side	●
Exchangers flexibles connection (kit)	Flexible connections on the exchanger water side	Easy installation. Limit transmission of vibrations on the water network	●
Exchangers water filter (kit)	Water filter	Eliminate dust in the water network	● Without pump option
Condenser water filter (kit)	Water filter	Eliminate dust in the water network	● Without pump option
Set point adjustment by 4-20mA signal	Connections to allow a 4-20 mA signal input	Simplified energy management, enabling the setpoint to be set by a 4-20 mA external signal	●
External temperature sensor	External temperature sensor control for using weather compensation	Allow to adjust set point using weather compensation and define autorisation operation mode to external temperature	●
Free Cooling dry cooler management	Control & connections to a Free Cooling Drycooler Opera or Vextra fitted with option FC control box	Easy system managment, Extended control capabilities to a dryccoler used in Free Cooling mode	●
Desuperheater flexibles connection (kit)	Flexibles connections on the desuperheaterr water side	Easy installation. Limit transmission of vibrations on the water network	Sizes 360 to 600

● ALL MODELS
Refer to the selection tool to find out which options are not compatible

214

TECHNICAL CHARACTERISTICS

DYNACIAT LG				080	090	100	120	130	150	180	200	240	260	300
Heating														
Standard unit Full load performances*	HW1	Nominal capacity	kW	30	35	38	44	51	56	70	77	89	101	114
		COP	kW/kW	5,48	5,48	5,44	5,47	5,43	5,45	5,49	5,40	5,46	5,42	5,47
	HW2	Nominal capacity	kW	29	33	36	43	49	54	68	74	85	97	108
		COP	kW/kW	4,31	4,33	4,32	4,33	4,37	4,31	4,35	4,30	4,27	4,36	4,29
	HW3	Nominal capacity	kW	28	33	35	41	47	52	65	73	81	93	103
		COP	kW/kW	3,57	3,61	3,59	3,58	3,65	3,59	3,55	3,60	3,51	3,68	3,54
Standard unit Seasonal energy efficiency**	HW1	SCOP $_{30/35°C}$	kWh/kWh	5,35	5,33	5,24	5,28	5,23	5,26	5,95	5,9	5,93	6,01	6,03
		ηs heat $_{30/35°C}$	%	206	205	202	203	201	202	230	228	229	232	233
	HW3	**SCOP $_{47/55°C}$**	**kWh/kWh**	**4,31**	**4,31**	**4,29**	**4,31**	**4,33**	**4,28**	**4,79**	**4,83**	**4,74**	**4,96**	**4,81**
		ηs heat $_{47/55°C}$	**%**	**164**	**164**	**163**	**164**	**165**	**163**	**184**	**185**	**181**	**191**	**184**
		P_{rated}	kW	32	37	40	47	54	59	75	83	93	106	118
		Energy labelling	kW/kW	A++	A++	A++	A++	A++	A++	-	-	-	-	-
Cooling														
Standard unit Full load performances*	CW1	Nominal capacity	kW	25	29	32	37	42	47	58	63	74	84	94
		EER	kW/kW	4,68	4,68	4,65	4,68	4,65	4,67	4,65	4,57	4,62	4,58	4,62
		Eurovent class		B	B	B	B	B	B	B	C	C	C	C
	CW2	Nominal capacity	kW	34	39	43	50	57	66	78	86	102	113	129
		EER	kW/kW	6,35	6,04	5,96	5,98	5,83	5,99	6,02	5,83	6,10	5,86	6,08
		Eurovent class		A	A	A	A	A	A	A	A	A	A	A
Standard unit Seasonal energy efficiency**		SEER $_{12/7°c}$ Comfort low temp.	kWh/kWh	4,79	4,78	4,69	4,72	4,69	4,72	5,41	5,34	5,31	5,45	5,41
		SEPR $_{12/7°c}$ Process high temp.	kWh/kWh	6,33	6,34	6,17	6,12	6,16	6,20	6,47	6,33	6,33	6,43	6,47
Unit with Low-temperature brine solution option Seasonal energy efficiency**		SEPR $_{-2/-8°C}$ Process medium temp.***	kWh/kWh	3,88	4,22	4,38	4,29	4,41	3,96	4,10	4,63	4,46	4,67	4,65
Part Load integrated values		IPLV.SI	kW/kW	5,840	5,850	5,760	5,780	5,770	5,820	6,580	6,680	6,560	6,810	6,720
Sound levels														
Standard unit														
Sound power(1)			dB(A)	67	69	69	69	70	70	72	72	72	73	73
Sound pressure at 10 m(2)			dB(A)	36	37	38	38	39	39	40	41	41	42	42
Unit with Low Noise option														
Sound power(1)			dB(A)	65	66	66	67	68	68	68	69	69	69	70
Sound pressure at 10 m(2)			dB(A)	34	35	35	35	37	37	37	37	38	38	39

*	In accordance with standard EN14511-3:2013.
**	In accordance with standard EN14825:2016, average climate
***	With EG 30%
HW1	Heating mode conditions: Evaporator water inlet/outlet temperature 10 °C/7 °C, condenser water inlet/outlet temperature 30 °C/35 °C, evaporator fouling factor 0 m². k/W
HW2	Heating mode conditions: Evaporator water inlet/outlet temperature 10 °C/7 °C, condenser water inlet/outlet temperature 40 °C/45 °C, evaporator fouling factor 0 m². k/W
HW3	Heating mode conditions: Evaporator water inlet/outlet temperature 10 °C/7 °C, condenser water inlet/outlet temperature 47 °C/55 °C, evaporator fouling factor 0 m². k/W
CW1	Cooling mode conditions: Evaporator water inlet/outlet temperature 12 °C/7 °C, condenser water inlet/outlet temperature 30 °C/35 °C, evaporator fouling factor 0 m². k/W
CW2	Cooling mode conditions: Evaporator water inlet/outlet temperature 23 °C/18 °C, condenser water inlet/outlet temperature 30 °C/35 °C, evaporator fouling factor 0 m². k/W
ηs heat $_{30/35°C}$ & SCOP $_{30/35°C}$	Values calculated in accordance with EN14825:2016
ηs heat $_{47/55°C}$ & SCOP $_{47/55°C}$	**Bold values compliant to Ecodesign regulation: (EU) No 813/2013 for Heat Pump application**
SEER $_{12/7°C}$ & SEPR $_{12/7°C}$	Values calculated in accordance with EN14825:2016
SEPR $_{-2/-8°C}$	Values calculated in accordance with EN14825:2016
IPLV.SI	Calculated as per AHRI standard 551-591(SI).
-	Not applicable
(1)	In dB ref=10^{-12} W, (A) weighting. Declared dualnumber noise emission values in accordance with ISO 4871 (with an associated uncertainty of +/-3dB(A)). Measured in accordance with ISO 9614-1 and certified by Eurovent.
(2)	In dB ref 20µPa, (A) weighting. Declared dualnumber noise emission values in accordance with ISO 4871 (with an associated uncertainty of +/-3dB(A)). For information, calculated from the sound power level Lw(A).

EUROVENT CERTIFIED PERFORMANCE www.eurovent-certification.com

Eurovent certified values

2

TECHNICAL CHARACTERISTICS

DYNACIAT LG		080	090	100	120	130	150	180	200	240	260	300
Dimensions												
Length	mm	600	600	600	600	600	600	880	880	880	880	880
Width	mm	1044	1044	1044	1044	1044	1044	1474	1474	1474	1474	1474
Height	mm	901	901	901	901	901	901	901	901	901	901	901
Operating Weight (3)												
Standard unit	kg	191	200	200	207	212	220	386	392	403	413	441
Unit with evaporator with single LP pump	kg	250	258	258	263	266	271	431	435	442	449	465
Unit with condenser with single LP pump	kg	250	258	258	263	266	271	431	435	442	449	465
Unit with evaporator with single variable-speed HP pump + condenser with single variable-speed HP pump	kg	305	313	313	321	327	334	513	521	533	544	574
Compressors		Hermetic Scroll 48.3 r/s										
Circuit A	Qty	1	1	1	1	1	1	2	2	2	2	2
Number of power stages	Qty	1	1	1	1	1	1	2	2	2	2	2
Refrigerant (3)		R410A										
Circuit A	kg	3,5	3,5	3,6	3,7	4	4,6	7,6	7,8	7,9	8,7	11,5
	tCO_2e	7,3	7,3	7,5	7,7	8,4	9,6	15,9	16,3	16,5	18,2	24
Oil charge		TYPE: 160SZ										
Circuit A	l	3	3,3	3,3	3,3	3,3	3,6	3,3	3,3	3,3	3,3	3,6
Power control		Connect Touch Control										
Minimum capacity	%	100	100	100	100	100	100	50	50	50	50	50
Water type heat exchanger												
Evaporator		Plate heat exchanger with direct expansion										
Water volume	l	3,3	3,6	3,6	4,2	4,6	5	8,4	9,2	9,6	10,4	12,5
Max. water-side operating pressure without hydraulic module	kPa	1000	1000	1000	1000	1000	1000	1000	1000	1000	1000	1000
Condenser		Plate heat exchanger										
Water volume	l	3,3	3,6	3,6	4,2	4,6	5	8,4	9,2	9,6	10,4	12,5
Max. water-side operating pressure without hydraulic module	kPa	1000	1000	1000	1000	1000	1000	1000	1000	1000	1000	1000
Hydronic module (optional)												
Single pump		Pump, Victaulic screen filter, drain valves (water and air), pressure sensors										
Expansion tank volume (optional)	l	8	8	8	8	8	8	12	12	12	12	12
Expansion vessel pressure(4)	bar	3	3	3	3	3	3	3	3	3	3	3
Max. water-side operating pressure with hydraulic module	kPa	300	300	300	300	300	300	300	300	300	300	300
Water connections with or without hydronic module		Victaulic®										
Connections	inch	1,5	1,5	1,5	1,5	1,5	1,5	2	2	2	2	2
External diameter	mm	48,3	48,3	48,3	48,3	48,3	48,3	60,3	60,3	60,3	60,3	60,3
Casing paint		Colour code: RAL 7035 / RAL 7024										

(3) Values shown are a guideline only. Please refer to the unit nameplate
(4) On delivery, the vessels are preinflated to a standard value, which may not be the optimum one for the installation. To enable the water volume to be varied as desired, adapt the inflation pressure to a value close to that which corresponds to the static height of the installation. Fill the installation with water (bleeding out any air) at a pressure more than 10 to 20 kPa higher than the vessel pressure.

216

TECHNICAL CHARACTERISTICS

DYNACIAT LG				360	390	450	480	520	600
Heating									
Standard unit Full load performances*	HW1	Nominal capacity	kW	137	156	172	183	206	230
		COP	kW/kW	5,60	5,57	5,49	5,64	5,59	5,56
	HW2	Nominal capacity	kW	131	148	163	174	197	218
		COP	kW/kW	4,42	4,43	4,37	4,40	4,48	4,36
	HW3	Nominal capacity	kW	125	140	155	166	189	209
		COP	kW/kW	3,58	3,62	3,56	3,60	3,76	3,59
Standard unit Seasonal energy efficiency**	HW1	SCOP $_{30/35°C}$	kWh/kWh	6,24	6,28	6,18	6,24	6,24	6,08
		ηs heat $_{30/35°C}$	%	242	243	239	242	241	235
	HW3	**SCOP $_{47/55°C}$**	**kWh/kWh**	**5,02**	**5,05**	**5,01**	**4,99**	**5,14**	**4,92**
		ηs heat $_{47/55°C}$	**%**	**193**	**194**	**192**	**192**	**198**	**189**
		P_{rated}	kW	143	161	178	191	216	239
Cooling									
Standard unit Full load performances *	CW1	Nominal capacity	kW	115	130	144	153	172	192
		EER	kW/kW	4,78	4,75	4,68	4,81	4,76	4,77
		Eurovent class		B	B	B	B	B	B
	CW2	Nominal capacity	kW	155	176	196	207	230	262
		EER	kW/kW	6,17	6,07	5,98	6,20	5,94	6,09
		Eurovent class		A	A	A	A	A	A
Standard unit Seasonal energy efficiency**		SEER $_{12/7°C}$ Comfort low temp.	kWh/kWh	6,05	6,16	6,07	5,91	5,97	5,87
		SEPR $_{12/7°C}$ Process high temp.	kWh/kWh	6,92	7,05	6,90	6,69	6,69	6,69
Unit with Low-temperature brine solution option Seasonal energy efficiency**		SEPR $_{-2/-8°C}$ Process medium temp.***	kWh/kWh	4,30	4,45	4,42	4,66	4,72	4,68
Part Load integrated values		IPLV.SI	kW/kW	6,860	6,980	6,900	6,820	6,890	6,820
Sound levels									
Standard unit									
Sound power(1)			dB(A)	76	77	78	76	77	78
Sound pressure at 10 m(2)			dB(A)	44	45	46	44	45	47
Unit with Low Noise option									
Sound power(1)			dB(A)	73	74	75	73	74	75
Sound pressure at 10 m(2)			dB(A)	41	42	43	41	42	44

*	In accordance with standard EN14511-3:2013.
**	In accordance with standard EN14825:2016, average climate
***	With EG 30%
HW1	Heating mode conditions: Evaporator water inlet/outlet temperature 10 °C/7 °C, condenser water inlet/outlet temperature 30 °C/35 °C, evaporator fouling factor 0 m². k/W
HW2	Heating mode conditions: Evaporator water inlet/outlet temperature 10 °C/7 °C, condenser water inlet/outlet temperature 40 °C/45 °C, evaporator fouling factor 0 m². k/W
HW3	Heating mode conditions: Evaporator water inlet/outlet temperature 10 °C/7 °C, condenser water inlet/outlet temperature 47 °C/55 °C, evaporator fouling factor 0 m². k/W
CW1	Cooling mode conditions: Evaporator water inlet/outlet temperature 12 °C/7 °C, condenser water inlet/outlet temperature 30 °C/35 °C, evaporator fouling factor 0 m². k/W
CW2	Cooling mode conditions: Evaporator water inlet/outlet temperature 23 °C/18 °C, condenser water inlet/outlet temperature 30 °C/35 °C, evaporator fouling factor 0 m². k/W
ηs heat $_{30/35°C}$ & SCOP $_{30/35°C}$	Values calculated in accordance with EN14825:2016
ηs heat $_{47/55°C}$ & SCOP$_{47/55°C}$	**Bold values compliant to Ecodesign regulation: (EU) No 813/2013 for Heat Pump application**
SEER $_{12/7°C}$ & SEPR $_{12/7°C}$	Values calculated in accordance with EN14825:2016
SEPR $_{-2/-8°C}$	Values calculated in accordance with EN14825:2016
IPLV.SI	Calculated as per AHRI standard 551-591(SI).
(1)	In dB ref=10^{-12} W, (A) weighting. Declared dualnumber noise emission values in accordance with ISO 4871 (with an associated uncertainty of +/-3dB(A)). Measured in accordance with ISO 9614-1 and certified by Eurovent.
(2)	In dB ref 20µPa, (A) weighting. Declared dualnumber noise emission values in accordance with ISO 4871 (with an associated uncertainty of +/-3dB(A)). For information, calculated from the sound power level Lw(A).

EUROVENT CERTIFIED PERFORMANCE
www.eurovent-certification.com

Eurovent certified values

2

TECHNICAL CHARACTERISTICS

DYNACIAT LG		360	390	450	480	520	600
Dimensions							
Length	mm	880	880	880	880	880	880
Width	mm	1583	1583	1583	1583	1583	1583
Height	mm	1574	1574	1574	1574	1574	1574
Operating Weight (3)							
Standard unit	kg	721	742	765	844	872	899
Unit with evaporator with single LP pump	kg	996	1022	1048	1158	1230	1261
Unit with condenser with single LP pump	kg	1016	1042	1068	1178	1230	1261
Unit with evaporator with single variable-speed HP pump + condenser with single variable-speed HP pump	kg	1056	1082	1108	1218	1270	1301
Compressors		Hermetic Scroll 48.3 r/s					
Circuit A	Qty	3	3	3	2	2	2
Circuit B	Qty	-	-	-	2	2	2
Number of power stages	Qty	3	3	3	4	4	4
Refrigerant (3)		R410A					
Circuit A	kg	13,3	14,7	15,3	10,5	11,5	12,1
	tCO_2e	27,8	30,7	31,9	21,9	23,9	25,05
Circuit B	kg	-	-	-	10,5	11,25	12
	tCO_2e	-	-	-	21,9	23,9	25,05
Oil charge		TYPE: 160SZ					
Circuit A	l	3,3	3,3	3,6	3,3	3,3	3,6
Circuit B	l	-	-	-	3,3	3,3	3,6
Power control		Connect Touch Control					
Minimum capacity	%	33	33	33	25	25	25
Water type heat exchanger							
Evaporator		Plate heat exchanger with direct expansion					
Water volume	l	15	17	19	23	26	29
Max. water-side operating pressure without hydraulic module	kPa	1000	1000	1000	1000	1000	1000
Condenser		Plate heat exchanger					
Water volume	l	15	17	19	23	26	29
Max. water-side operating pressure without hydraulic module	kPa	1000	1000	1000	1000	1000	1000
Hydronic module (optional)							
Single pump		Pump, Victaulic screen filter, drain valves (water and air), pressure sensors					
Expansion tank volume (optional)	l	25	25	25	35	35	35
Expansion vessel pressure(4)	bar	4	4	4	4	4	4
Max. water-side operating pressure with hydraulic module	kPa	400	400	400	400	400	400
Water connections with or without hydronic module		Victaulic®					
Connections	inch	2,5	2,5	2,5	3	3	3
External diameter	mm	73	73	73	88,9	88,9	88,9
Casing paint		Colour code: RAL 7035 / RAL 7024					

(3) Values shown are a guideline only. Please refer to the unit nameplate
(4) On delivery, the vessels are preinflated to a standard value, which may not be the optimum one for the installation. To enable the water volume to be varied as desired, adapt the inflation pressure to a value close to that which corresponds to the static height of the installation. Fill the installation with water (bleeding out any air) at a pressure more than 10 to 20 kPa higher than the vessel pressure.

218

ELECTRICAL SPECIFICATIONS

DYNACIAT LG - Standard unit (without hydraulic module)		080	090	100	120	130	150	180	200	240	260	300	360	390	450	480	520	600
Power circuit																		
Nominal voltage	V-ph-Hz	400-3-50																
Voltage range	V	360-440																
Control circuit supply		24 V via internal transformer																
Nominal unit current draw(3)																		
Circuit A&B	A	10,5	13,2	13,8	15,6	16,2	20,2	26,4	27,6	31,2	32,4	40,4	46,8	48,6	60,6	62,4	64,8	80,8
Maximum unit power input(2)																		
Circuit A&B	kW	9,2	10,8	11,7	13,7	15,1	17,1	21,5	23,3	27,3	30,3	34,2	41	44,9	51,2	54,6	59,8	68,3
Unit power factor at maximum capacity(2)		0,85	0,83	0,85	0,85	0,86	0,85	0,83	0,85	0,85	0,86	0,85	0,85	0,85	0,85	0,85	0,85	0,85
Maximum unit current draw (Un-10%)(5)																		
Circuit A&B	A	17,3	20,8	22	25,8	28,2	32,2	41,6	44	51,6	56,4	64,4	77,3	84,7	96,7	103,1	112,9	128,9
Maximum current draw (Un)(4)																		
Circuit A&B - Standard unit	A	15,6	18,7	19,8	23,2	25,4	29	37,4	39,6	46,4	50,8	58	69,6	76,2	87	92,8	101,6	116
Maximum start-up current, standard unit (Un)(1)																		
Circuit A&B	A	98	142	142	147	158	197	161	162	170	183	226	193,4	208,8	255	216,6	234,2	284
Maximum start-up current, unit with soft start (Un)(1)																		
Circuit A&B	A	53,9	78,1	78,1	80,9	86,9	108,4	96,8	97,9	104,1	112,3	137,4	127,3	137,7	166,4	150,5	163,1	195,4

(1) Maximum instantaneous starting current (maximum operating current of the smallest compressor(s) + locked rotor current of the largest compressor).
(2) Power input, at the unit's permanent operating limits (indication given on the unit's name plate).
(3) Standardised EUROVENT conditions, water type heat exchanger input/output = 12°C/7°C, outdoor air temperature = 35°C.
(4) Maximum unit current at 400V, during non-permanent operation (indication given on the unit's name plate)
(5) Maximum unit current at 360V, during non-permanent operation

Short circuit current withstand capability (TN system(1))

DYNACIAT LG		080	090	100	120	130	150	180	200	240	260	300	360	390	450	480	520	600
Value without upstream protection																		
Short time assigned current (1s) - Icw	kA eff	3	3	3	3	3	3	3	3	3	3	3	5,5	5,5	5,5	5,5	5,5	5,5
Allowable peak assigned current - Ipk	kA pk	6	6	6	6	6	6	6	6	6	6	6	20	20	20	20	20	20
Value with upstream protection																		
Conditional short circuit assigned current Icc	kA eff	40	40	40	40	40	40	40	40	40	40	40	154	154	154	154	154	154
Associated Schneider circuit breaker - Compact type range(2)		NSX 100N																

(1) Type of system earthing
(2) If another current limiting protection device is used, its time-current trip and I²t thermal stress characteristics must be at least equivalent to those of the recommended Schneider circuit breaker.
The short-circuit withstand values given above were determined for the TN system.

Dimensions

■ DYNACIAT LG 80A to 150 without hydraulic module

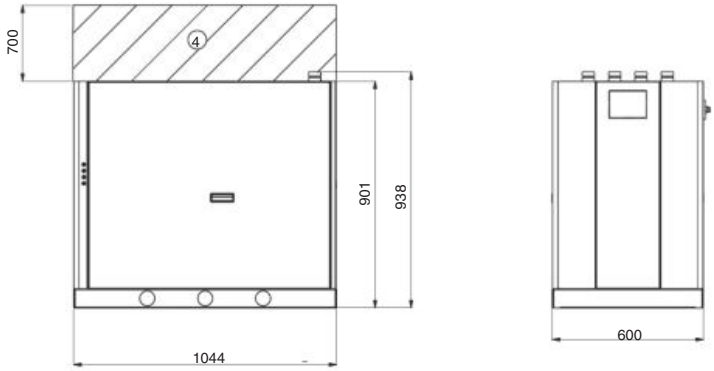

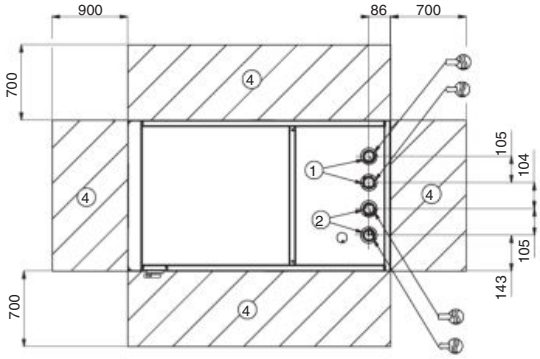

Key

All dimensions are given in mm

1. Evaporator side
2. Condenser side
3. Valve
4. Clearances required for maintenance (see Note)
5. Electrical box

Water inlet

Water outlet

Electrical power connection

■ DYNACIAT LG 80A to 150 with hydraulic module

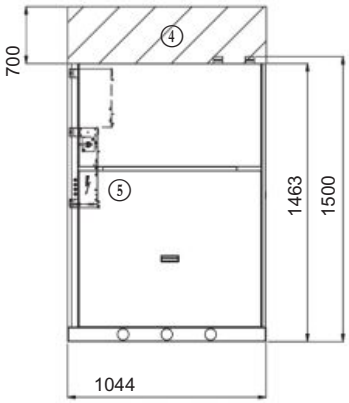

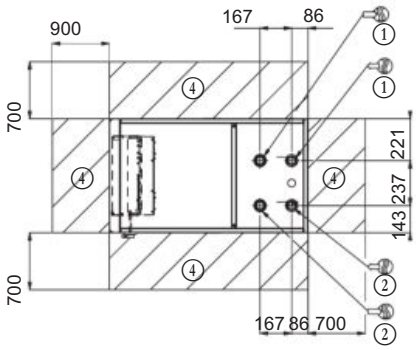

Notes:

Non-contractual drawings.
When designing a system, refer to the certified dimensional drawings provided with the unit or available on request.

Dimensions

■ DYNACIAT LG 180 to 300 without hydraulic module

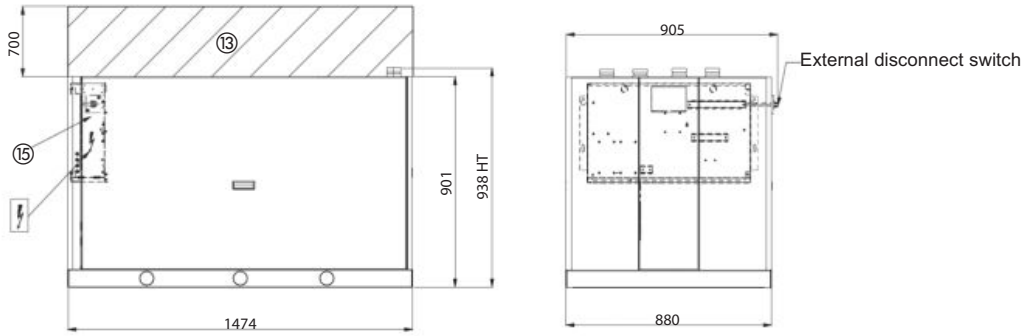

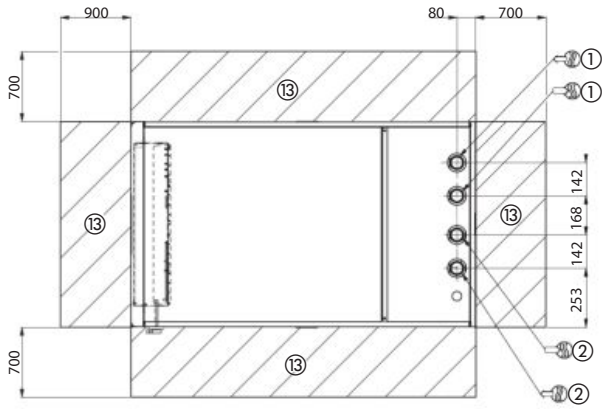

Key

All dimensions are given in mm

1. Evaporator side
2. Condenser side
3. Valve
4. Clearances required for maintenance (see Note)
5. Electrical box

Water inlet

Water outlet

Electrical power connection

■ DYNACIAT LG 180 to 300 with hydraulic module

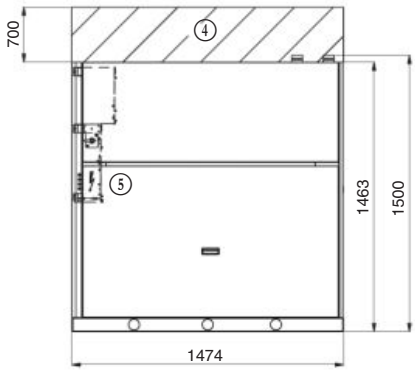

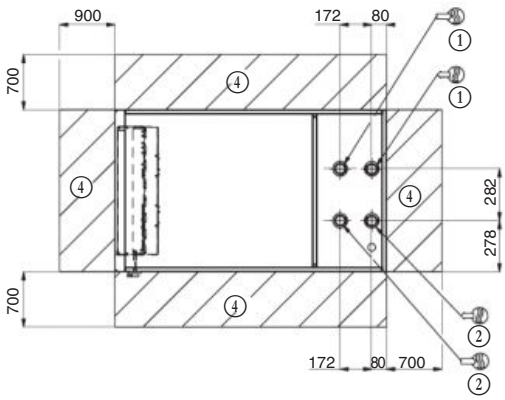

Notes:

Non-contractual drawings.
When designing a system, refer to the certified dimensional drawings provided with the unit or available on request.

Dimensions

■ DYNACIAT LG 360 to 450 without hydraulic module

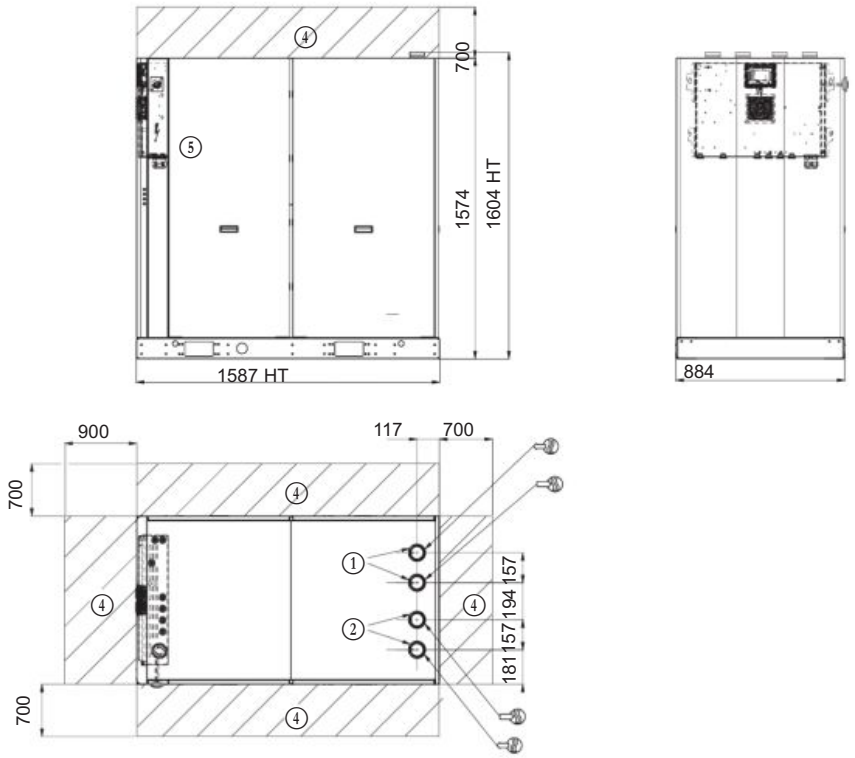

■ DYNACIAT LG 360 to 450 with hydraulic module

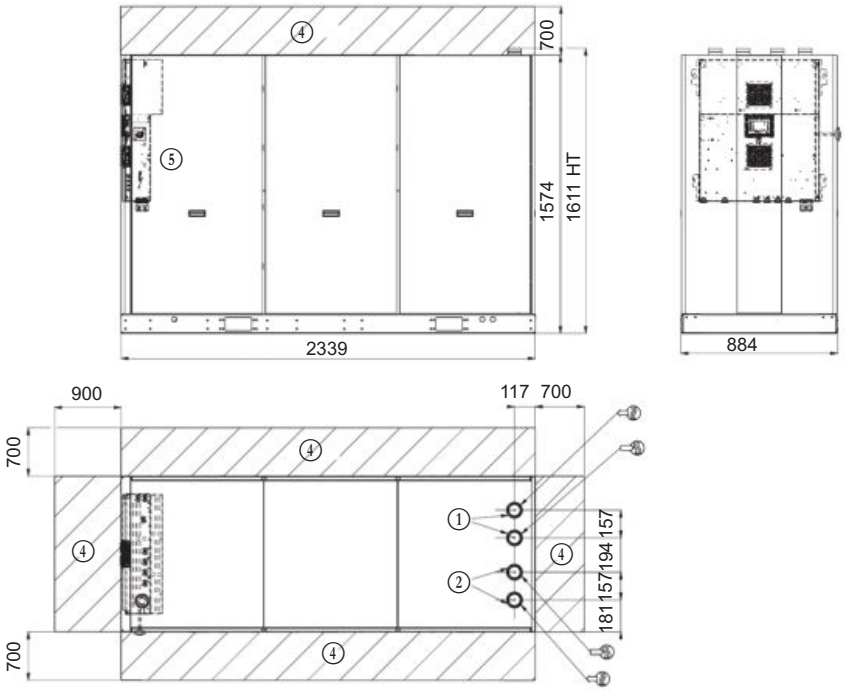

Key

All dimensions are given in mm

1. Evaporator side
2. Condenser side
3. Valve
4. Clearances required for maintenance (see Note)
5. Electrical box

Water inlet

Water outlet

Electrical power connection

Notes:

Non-contractual drawings.
When designing a system, refer to the certified dimensional drawings provided with the unit or available on request.

Dimensions

■ DYNACIAT LG 480 to 600 without hydraulic module

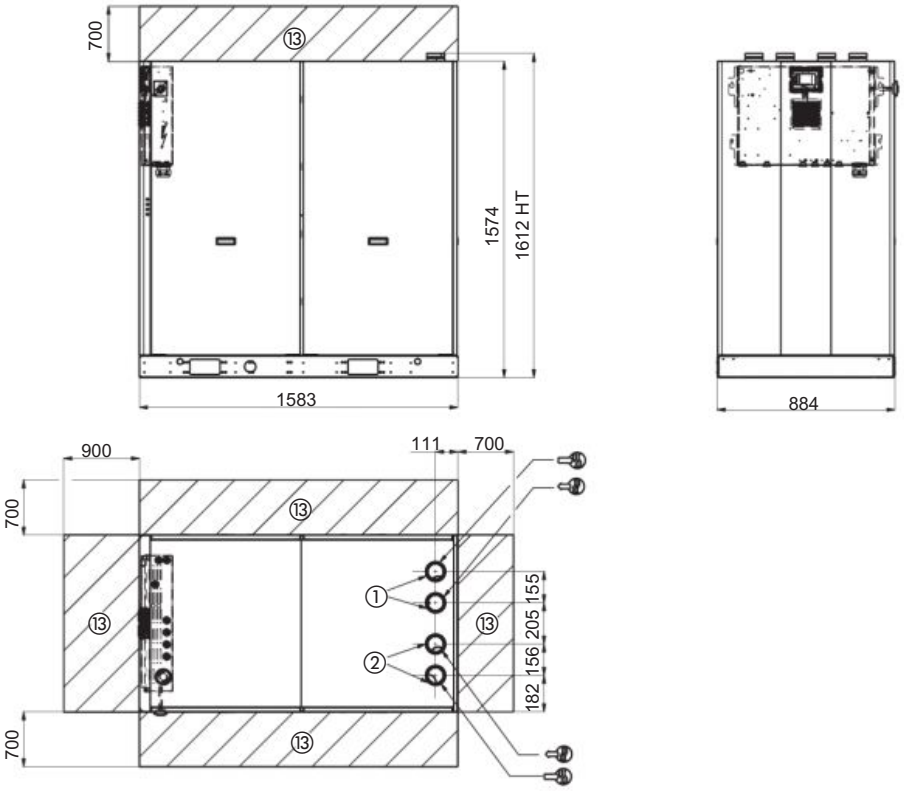

■ DYNACIAT LG 480 to 600 with hydraulic module

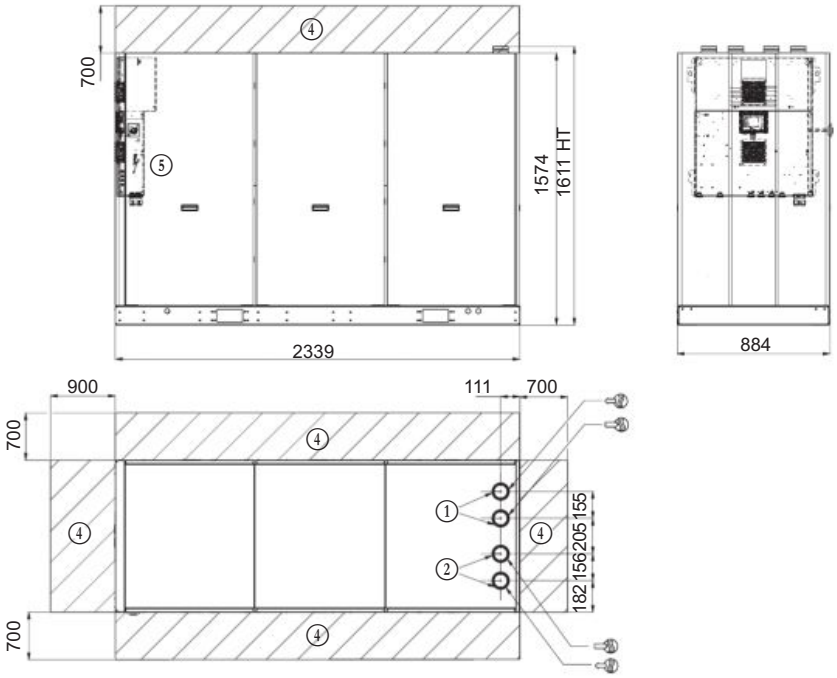

Key

All dimensions are given in mm

1. Evaporator side
2. Condenser side
3. Valve
4. Clearances required for maintenance (see Note)
5. Electrical box

Water inlet

Water outlet

Electrical power connection

Notes:

Non-contractual drawings.
When designing a system, refer to the certified dimensional drawings provided with the unit or available on request.

DYNACIAT POWER

Water cooled
water chillers

High energy efficiency
Compact and quiet
Scroll compressors
High-efficiency brazed-plate heat exchangers
CIAT self-adjusting electronic control

Cooling capacity: 220 to 720 kW
Heating capacity: 250 to 820 kW

Heating | Cooling only | Cooling and heating | HFC R410A

EUROVENT CERTIFIED PERFORMANCE
www.eurovent-certification.com

Use

The new generation of **DYNACIAT^{POWER}** water cooled water chillers offers an optimal solution for all heating or process cooling applications.

These units are designed to be installed in machine rooms that are protected against freezing temperatures and inclement weather.
The new range has been optimised to use ozone-friendly HFC R410A refrigerant. The use of this refrigerant guarantees compliance with the most demanding requirements for environmental protection and increased seasonal energy efficiency.

2

Range

DYNACIAT^{POWER} LG-LGP series

Cooling-only or heating-only models with water cooled condenser.

DYNACIAT^{POWER} LGP series

The design of the DYNACIAT^{POWER} LGP series heat pump range is identical to that of the DYNACIAT^{POWER} LG series. These machines provide solutions for the most diverse heating problems.

They can also be used in cooling mode by reversing the cycle on the hydraulic circuits.

Acoustic configuration:

a - STANDARD version

b - LOW NOISE version. Compressor casing

c - XTRA LOW NOISE version. Casing with compressor acoustic insulation

DESCRIPTION

The DYNACIAT^{POWER} LG-LGP series units are monoblock machines supplied as standard with the following components:

- Hermetic SCROLL compressors,
- Chilled water evaporator with brazed plates,
- Hot water condenser with brazed plates,
- Electrical power and remote control cabinet:
  - 400V-3ph-50Hz (+10%/-10%) general power supply + earth,
  - Transformer fitted as standard on the machine for supplying the remote control circuit with 230V-1ph-50Hz,
- CIAT CONNECT2 electronic control module.

The entire DYNACIAT^{POWER} range complies with the following EC directives and standards:

- Machinery directive 2006/42/EC, modified
- Electromagnetic compatibility directive 2014/30/EU, modified
- EMC Immunity and Emissions EN 61800-3 "C3"
- Low voltage directive 2014/35/EU, modified
- RoHS 2011/65/EU
- Pressure equipment directive (PED) 2014/68/EU
- Machinery directive EN-60-204-1
- Refrigeration systems and heat pumps EN 378-2

DESCRIPTION

LG > cooling only version
P > heating only version
1200 > unit size
V > R410A refrigerant

LG - LGP models 700V to 1600V
Xtra Low Noise Version

DESCRIPTION OF THE MAIN COMPONENTS

Compressors

- Hermetic SCROLL type.
- Built-in electric motor, cooled by intake gases.
- Motor protected by internal winding thermostat.
- Placed on anti-vibration mounts.

Evaporator

- Brazed-plate exchanger.
- Stainless steel plates.
- Plate patterns optimised for high efficiency.
- Armaflex thermal insulation.

Condenser

- Brazed-plate exchanger.
- Stainless steel plates.
- Plate patterns optimised for high efficiency.

Refrigerating accessories

- Dehumidifier filters with rechargeable cartridges.
- Hygroscopic sight glasses.
- Solenoid valves on refrigerant lines (700V to 1200V models).
- Thermostatic expansion valves (700V to 1000V models).
- Electronic expansion valves (1100V to 2400V models).

Regulation and safety instruments

- High and low pressure sensors.
- High pressure safety valves.
- Water temperature control sensors.
- Evaporator antifreeze protection sensor.
- Factory-fitted evaporator water flow controller.

Electrics box

- IP 21.
- 400V-3Ph-50 Hz power supply + Earth (+10%/-10%).
- Disconnect switch with handle on front.
- Control circuit transformer.
- Circuit breaker for compressor motor.
- Contact switches for compressor motor.
- CONNECT2 microprocessor-controlled electronic control module.
- Wire numbering.
- Marking of the main electrical components.
- RAL 7035.

CONNECT2 electronic control module

The CIAT electronic control module performs the following main functions:

- Regulation of the chilled or hot water temperature
- Regulation of the water temperature based on the outdoor temperature (water law).
- Regulation for low temperature energy storage.
- Second setpoint management.
- Complete management of compressors with start-up sequence, metering and runtime balancing.
- Self-adjusting and proactive functions with adjustment of parameters on drift control.
- In-series staged capacity-reduction system on compressors based on cooling and heating demands.
- Management of compressor short cycle protection.
- Management of the machine operation limit according to outdoor temperature.
- Operating and fault status diagnostics.
- Management of a fault memory allowing a log of the last 20 incidents to be accessed, with operating readings taken when the fault occurs.
- Master/slave management of the two machines in parallel with runtime balancing and automatic changeover if a fault occurs on one machine.
- Machine time schedule.
- Display and access to the operating parameters via a multilingual LCD screen with 4 lines of 24 characters.

Remote management

CONNECT2 is equipped as standard with an RS485 serial port offering a range of remote management, monitoring and diagnostic options via the communication bus.

Several contacts are available as standard which enable the DYNACIAT^{POWER} to be controlled remotely by wired link:

- Automatic operation control: when this contact is open, the machine stops.
- Setpoint 1/setpoint 2 selector: when this contact is closed, a second cooling setpoint is activated (energy storage mode, for example).
- Heating/cooling operating mode selection: this input switches from one operating mode to another.

  Contact closed = heating mode.
  Contact open = cooling mode.
- Setpoint adjustable via 4-20 mA signal: this input is used to adjust the setpoint in heating or cooling mode.
- Compressor load shedding: closing the contact(s) concerned allows the power or refrigerating consumption of the machine to be limited by stopping one or more compressors.
- Water pump 1 and 2 control: these outputs control the switches for one or two water pumps.
- Fault reporting: this contact indicates the presence of a major fault which has caused one or both refrigerating circuits to stop.

Power control

In-series staged power control system on the compressors:

- 4 stages for 700V to 1600V models.
- 6 stages for 1800V and 2400V models.
- 8 stages for 2100V models.

Casing

Casing made from RAL 7024 and RAL 7035 painted panels.

STANDARD EQUIPMENT/AVAILABLE OPTIONS

DYNACIAT POWER LG-LGP	700V à 2400V
Low-temperature glycol/water mix (0°C to -12°C)	●
Safety switch	●
Control circuit transformer	●
Electrical cabinet wire numbers	●
RS485 communication interface	●
Water flow controller	●
Master/slave control of two machines	●
ETHERNET gateway MODBUS	●
Electronic expansion valve (1)	▲
Low Noise version (compressor casing)	▲
Xtra Low Noise version (compressor casing with acoustic insulation)	▲
Compressor intake shut-off valves	▲
Soft start	▲
Electrical energy meter	▲
Water filter on evaporator and condenser	▮
Phase controller (reversal, loss, asymmetry)	▮
Anti-vibration mounts	▮
Flexible hydraulic couplings on evaporator and condenser	▮
Relay board with dry contacts	▮
LONWORKS/BACNET gateway	▮

● Supplied as standard ▲ Factory-mounted option ▮ Option supplied as a kit
(1) Standard equipment for 1100V to 2400V models

TECHNICAL SPECIFICATIONS

DYNACIAT POWER LG			700V	800V	900V	1000V	1100V	1200V	1400V	1600V	1800V	2100V	2400V
Heating													
Standard unit Seasonal energy efficiency** HA1	**SCOP** 30/35°C	**kW / kW**	**5,59**	**5,63**	**5,7**	**5,54**	**5,49**	**5,49**	**5,55**	**5,55**	**4,72**	**4,99**	**4,54**
	ηs heat 30/35°C	%	**216**	**217**	**220**	**213**	**212**	**212**	**214**	**214**	**181**	**192**	**174**
	P_{rated}	**kW**	**258**	**296**	**333**	**375**	**412**	**451**	**521**	**580**	**687**	**754**	**869**
Cooling													
Standard unit Full load performances* CA1	Net cooling capacity	kW	217	251	288	327	356	385	443	499	582	657	713
	Net power input	kW	48,2	55,2	64,2	73	79,2	85,6	97,4	110,4	125	146	168
	EER	kW / kW	4,5	4,55	4,48	4,48	4,49	4,5	4,55	4,52	4,6	4,51	4,24
Standard unit	**SEPR** -2/-8°C **Process medium temp** ***	**kWh/kWh**	**3,99**	**4,1**	**4,04**	**4,08**	**4,01**	**4,01**	**4,26**	**4,29**	**4,56**	**4,69**	**4,67**
Seasonal energy efficiency***	SEER 12/7°C Comfort Low temp.	kW / kW	5,78	5,96	5,88	5,73	5,73	5,68	5,81	5,67	5,53	5,46	5,23
Standard unit	Lw / Lp (1)	dB(A)	89/57	90/58	90/58	89/57	90/58	91/59	95/63	96/64	93/61	95/63	97/65
Unit + Low Noise option	Lw / Lp (1)	dB(A)	84/52	85/53	85/53	86/54	87/55	88/56	90/58	91/59	89/57	90/58	91/59
Unit + Xtra Low Noise	Lw / Lp (1)	dB(A)	79/47	80/48	80/48	80/48	81/49	82/50	85/53	86/54	85/53	86/54	87/55
Refrigerating circuit													
Refrigerant (GWP)			R410 (GWP=2088)										
Number			2										
Refrigerant circuit 1		kg	13,5	15,5	16,4	17	19,7	21,3	21,5	23	31	33	34
Refrigerant circuit 2		kg	14	15	16,4	17,2	19,7	21,3	21	22	31	34	34
Tonne of CO_2 equivalent		TCO_2Eq	57,42	63,68	68,49	71,41	82,27	88,95	88,74	93,96	129,46	139,9	141,98
Compressor													
Type			Hermetic SCROLL - 2900 rpm										
Number			4								6		
Start-up mode			Direct in line in series										
Capacity control		Number of stages	6	4	6	4	6	4	6	4	6	8	6
		%	100-78-71-50-28-21-0	100-75-50-25-0	100-78-71-50-28-21-0	100-75-50-25-0	100-78-71-50-28-21-0	100-75-50-25-0	100-78-71-50-28-21-0	100-75-50-25-0	100-83-66-50-33-16-0	100-84-66-48-36-30-18-15-0	100-83-66-50-33-16-0
Type of oil for R410A			Polyolester POE 160SZ (32cP)						Polyolester POE 3MAF (32cst)				
Oil capacity per circuit		l	6,7 + 6,7	6,7 + 6,7	6,7 + 6,7	6,7 + 6,7	6,7 + 7,2	7,2 + 7,2	6,3 + 6,3	6,3 + 6,3	3 x 6,3	3 x 6,3	3 x 6,3
Evaporator													
Type/Number			Brazed-plate heat exchanger/ 1										
Water capacity		l	20	23	26	29	32	37	50	57	64	77	
Hydraulic connection		Ø	VICTAULIC DN100			VICTAULIC DN125					VICTAULIC DN150		
Max. pressure, water end		bar	10 bars										
Min/max water flow rate		m^3/h	22 / 70	26 / 81	29 / 92	33 / 105	35 / 113	38 / 124	44 / 137	51 / 151	61 / 150	68 / 150	74 / 150

*	In accordance with standard EN14511-3:2013.
**	In accordance with standard EN14825:2016, average climate
***	With EG 30%.
HA1	Heating mode conditions: Water heat exchanger water entering/leaving temperature 30°C/35°C, outside air temperature tdb/twb = 7°C db/6°C wb, evaporator fouling factor 0 m^2. k/W.
CA1	Cooling mode conditions: evaporator water inlet/outlet temperature 12 °C/7 °C, outdoor air temperature 35 °C, evaporator fouling factor 0 m^2. k/W
ηs heat 30/35°C **& SCOP** 30/35°C	**Values in bold comply with Ecodesign Regulation (EU) No. 813/2013 for Heating applications.**
SEER 12/7°C	Values calculated according to EN14825:2016.
SEPR -2/-8°C	**Values in bold comply with Ecodesign Regulation (EU) No. 2015/1095 for Process application**
(1)	**Lw** : overall power level in accordance with standard ISO3744 **Lp** : overall pressure level at 10 metres in a free field calculated using the formula Lp=LW-10logS

EUROVENT CERTIFIED PERFORMANCE
www.eurovent-certification.com

Eurovent certified values

2

TECHNICAL SPECIFICATIONS

DYNACIAT POWER LG		700V	800V	900V	1000V	1100V	1200V	1400V	1600V	1800V	2100V	2400V
Water condenser												
Type/ Number		Brazed-plate heat exchanger/ 1										
Water capacity	l	23	26	29	32	37	40	55	61	73	77	77
Hydraulic connection	Ø	VICTAULIC DN100			VICTAULIC DN125					VICTAULIC DN150		
Max. pressure, water end	bar	10 bars										
Min/max water flow rate	m^3/h	19/ 64	22/ 74	25/ 84	28/ 95	31/ 103	33/ 112	38/ 129	43/ 143	52/ 150	59/ 150	66/ 163
Dimensions												
Length	mm	2099						2499		3350		
Width	mm	996										
Height	mm	1869						1887		1970		
Weight												
Weight (empty)	kg	1044	1156	1189	1312	1363	1425	1613	1708	2284	2376	2418
Weight in operation	kg	1088	1205	1246	1378	1436	1510	1713	1818	2472	2588	2637
Max. storage temperature	°C	+50°C										

ELECTRICAL DATA

DYNACIAT POWER LG		700V	800V	900V	1000V	1100V	1200V	1400V	1600V	1800V	2100V	2400V
COMPRESSOR												
Voltage	V	400V - 3Ph - 50Hz (+10/- 10%)										
Maximum nominal current	A	140	160	182	205	218	232	266	295	356	399	443
Starting current (1)	A	316	334	391	414	480	494	586	615	607	720	763
Starting current with Soft Start option (1)	A	230	248	287	310	352	366	429	458	483	562	605
REMOTE CONTROL AUXILIARY CIRCUIT												
Voltage	V	230V - 1Ph - 50Hz (+10/- 10%)										
Maximum nominal current	A	0,8						1,3				
Transformer capacity	VA	160						250				
Machine protection rating		IP 21										

(1) Starting current of largest compressor + maximum current of other compressors under full load
Cable selection nominal current = sum of maximum nominal currents in above tables

DIMENSIONS

■ 700V to 1600V models

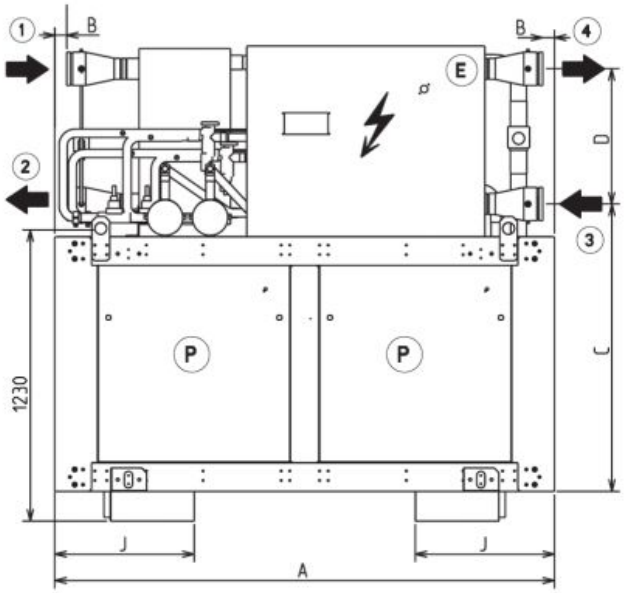

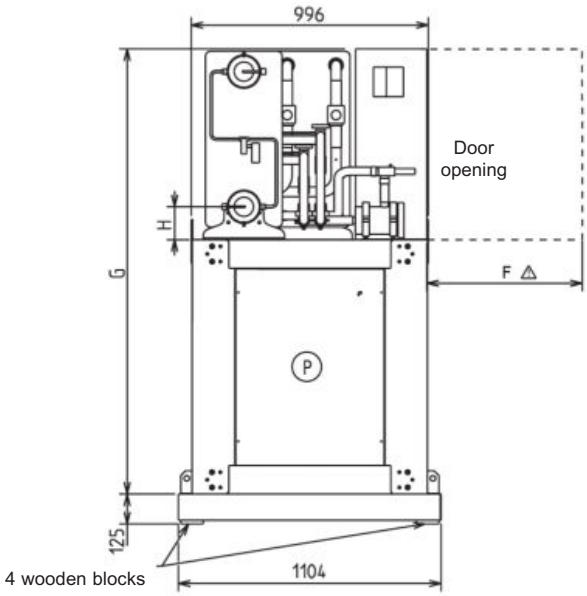

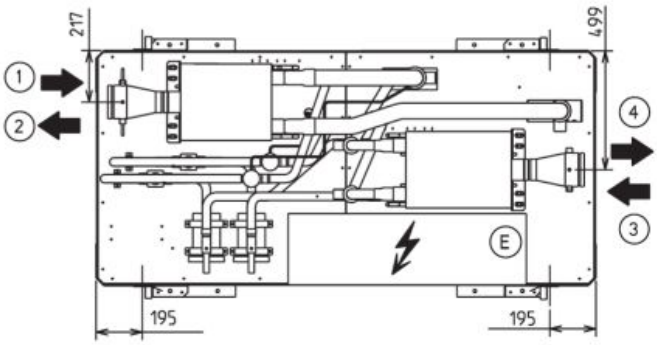

(E) Electrical connection on the side

(P) Noise insulation panels option

Models	Dimensions (mm)								Chilled water		Hot water		Weight (kg)	
	A	B	C	D	F	G	H	J	Input 1	Outlet 2	Input 3	Outlet 4	empty	in operation
700V	2099	49	1207	568	1000	1869	137	585	VICTAULIC DN 100		VICTAULIC DN 100		1044	1088
800V													1156	1205
900V													1189	1246
1000V									VICTAULIC DN 125		VICTAULIC DN 125		1312	1378
1100V													1363	1436
1200V													1425	1510
1400V	2499	60	1240	532	600	1887	170	715					1613	1713
1600V													1708	1818

Dimensions

■ 1800V to 2400V models

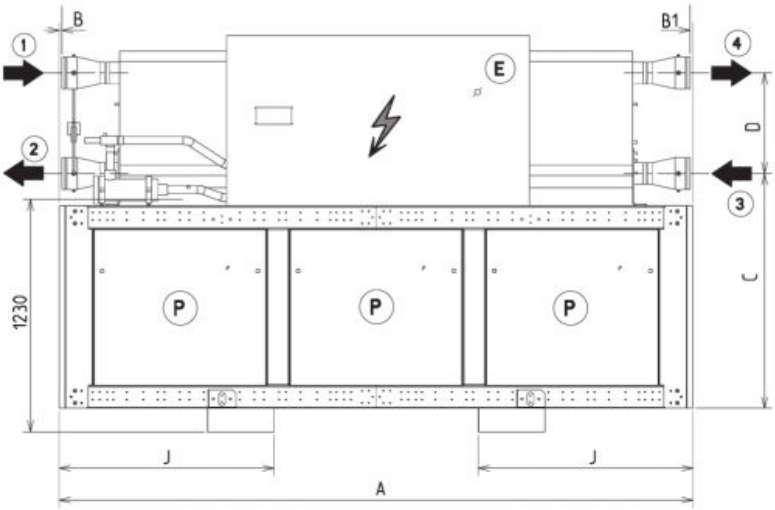

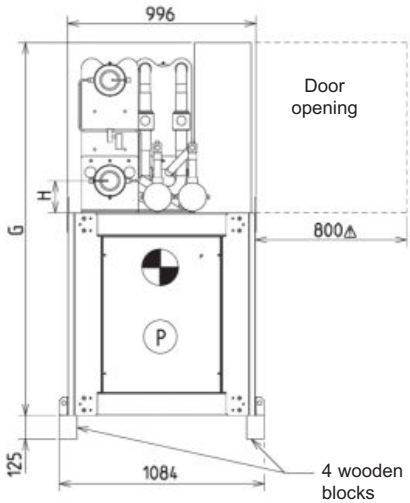

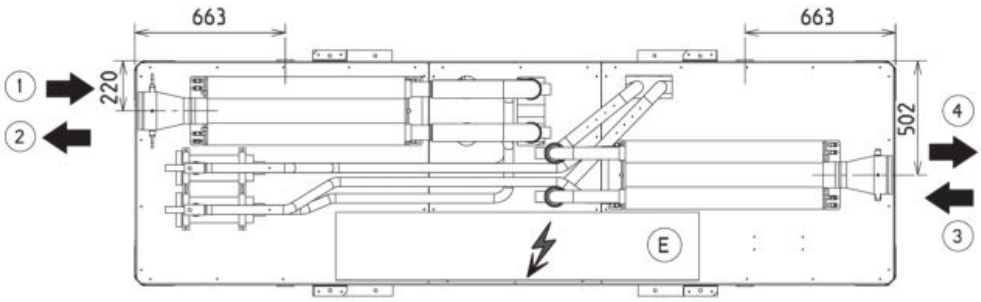

(E) Electrical connection on the side

(P) Noise insulation panels option

Models	Dimensions (mm)								Chilled water		Hot water		Weight (kg)	
	A	B	B1	C	D	G	H	J	Input 1	Outlet 2	Input 1	Outlet 2	empty	in operation
1800V	3350	159	63	1240	532	1970	170	1135	VICTAULIC DN 150		VICTAULIC DN 150		2284	2472
2100V		15	15										2376	2588
2400V													2418	2637

HYDROCIAT LW

Water chillers
Heat pump

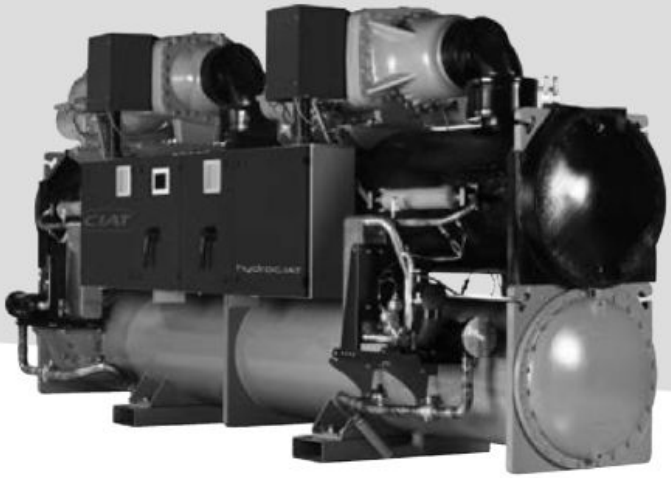

Energy excellence

Compact and reliable
Screw compressors
Flooded shell and tubes evaporator
Self-adjusting electronic control
Touch screen control interface

Cooling capacity 273-1756 kW
Heating capacity 317-1989 kW

Cooling

Heating

Heat recovery

EUROVENT CERTIFIED PERFORMANCE
www.eurovent-certification.com

Use

The latest generation of **HYDROCIAT LW** water chillers and water-to-water heat pumps are the perfect solution for all heating and cooling applications in the Office, Healthcare, Industry, Administration, Shopping Centres and Collective Housing markets.

HYDROCIAT is optimised to use ozone-friendly HFC R134a refrigerant.

This range guarantees compliance with the most demanding requirements for high energy efficiency and CO_2 reduction to comply with the various applicable European directives and regulations.

When producing chilled water, these units can be connected to a drycooler or a water cooling tower.

With the heat pump option, the units can produce hot water for heating applications. They can also be used in cooling mode by reversing the cycle on the hydraulic circuits using a set of valves (hydraulic valves not supplied).

2

Range

HYDROCIAT LW ST series

Standard cooling or heating version

The product is optimised to meet the most demanding technical and economic requirements.

HYDROCIAT LW HE series

High Efficiency cooling or heating version

The product is optimised for high energy efficiency applications for which optimum SEER, SEPR and SCOP values are required, ensuring operating costs are kept to a minimum.

233

DESCRIPTION

HYDROCIAT units are packaged machines supplied as standard with the following components:

- Twin-screw semi-hermetic compressors
- Shell and tube type chilled-water evaporator
- Shell and tube type hot water condenser
- Electrical power and remote control cabinet:
  - 400 V-3ph-50 Hz general power supply (+/-10%) + Earth
  - transformer fitted as standard on the machine for supplying the remote control circuit with 24 V
- Connect Touch electronic control module
- Casing for indoor installation

The entire HYDROCIAT range complies with the following EC directives and standards:

- Machinery Directive 2006/42/EC
- Electromagnetic Compatibility Directive 2014/30/EU
- EMC immunity and emissions EN 61800-3 'C3'
- Low Voltage Directive 2014/35/EU
- RoHS 2011/65/EU
- Pressure Equipment Directive (PED) 2014/68/EU
- Machinery Directive EN 60-204 -1
- Refrigeration systems and heat pumps EN 378-2.
- Regulation (EU) 2016/2281 implementing Directive 2009/125/EC with regard to ecodesign requirements

DESIGNATION

LW **ST** **708** **D**

- **D** > generation of the range
- **708** > unit size
  - **8** > unit equipped with economiser function
- **ST** > Standard version
  HE > High Efficiency version
- **LW** > cooling or heating version

CONFIGURATION

ST	Standard	**HE**	High Efficiency
ST LN option	Standard Low Noise	**HE LN option**	High Efficiency Low Noise

DESCRIPTION OF THE COMPONENTS

Compressors

- Twin-screw semi-hermetic type
- 2 screws fitted on ball and roller bearings
- Continuous power control
- Built-in electric motor, cooled by intake gases
- Integral electronic protection of the motor against thermal and electrical overloads
- Monitoring of rotation direction, absence of phase, over and under voltage, and power supply failure
- Monitoring of lubrication under differential pressure
- Built-in oil filter
- Internal pressure surge valve and valve to prevent reverse rotation during shutdown phases
- Monitoring of maximum head pressure
- Silencer fitted at the discharge to reduce pulses from the discharged gas
- Star-delta start limiting the in-rush current

Shell and tube evaporator

- High performance glandless technology
- Copper tube bundle with internal and external grooves
- 19 mm thermal insulation
- Victaulic type coupling
- Maximum pressure, water side, of 10 bar (21 bar as option)

Shell and tube condenser

- Copper tube bundle with internal and external grooves
- 19 mm thermal insulation (option)
- Built-in oil separator
- Victaulic type coupling
- Maximum pressure, water side, of 10 bar **(21 bar as option)**

Economiser function (available on models designated by the figure 8)

- 1 brazed plate heat exchanger on each refrigerating circuit
- Refrigerant flow rate controlled by an electronic expansion valve
- The economiser function allows the cooling capacity to be significantly increased and provides considerable optimisation of the machine's energy efficiency

Refrigerant accessories

- Dehumidifier filters with rechargeable cartridges
- Hygroscopic sight glasses
- Electronic expansion valves

Regulation and safety instruments

- High and low pressure sensors
- Safety relief valves on refrigerating circuit
- Evaporator antifreeze protection sensor
- Chilled water and hot water control sensors
- Electronic evaporator water circulation controller

Electrical cabinet

- Electrical cabinet index of protection IP23
- Safety disconnect switch
- 24 V control circuit
- Remote control transformer circuit
- Protection of the power and control circuits
- Compressor motor contactor
- Connect Touch microprocessor-controlled electronic control module
- Electrical cabinet wire numbers
- Location of main components

Connect Touch control module

- User interface with 5 inch touchscreen (7-inch option)
- Intuitive, user-friendly navigation using icons
- Clear information display in 8 languages
- (F-GB-E-NL-I-S-P + Chinese)

- The electronic control module performs the following main functions:
- regulation of the chilled water temperature (at the return or at the outlet)
- regulation of the water temperature based on the outdoor temperature (water law)
- regulation for low temperature energy storage
- second setpoint management
- complete management of compressors with start-up sequence, timer and operating time balancing
- self-regulating and proactive functions with adjustment of settings on drift control
- continuous power control slide system on the compressors according to the thermal requirements
- management of compressor short cycle protection
- phase reversal protection
- management of occupied/unoccupied modes (according to the time schedule)
- equalisation of compressor operating hours
- condensing temperature limitation (option)
- diagnosis of fault and operating statuses
- management of a fault memory allowing a log of the last 50 incidents to be accessed, with operating readings taken when the fault occurs
- blackbox memory
- master/slave management of two machines with equalisation of operating hours and automatic switching
- in case of a machine fault
- weekly and hourly time schedule for the machine, including 16 periods of absence
- display of all machine parameters (3 access levels, User/Maintenance/Factory, password-protected): temperature, setpoints, pressures, flow rate, operation time.
- display of trend curves for the main values
- storage of maintenance manual, wiring diagram and spare parts list.

Unit construction

- Electrical cabinet in graphite grey (RAL 7024)
- Compressors in grey (RAL 7037)

Description of the components

Remote management

Connect Touch is equipped as standard with an RS485 port and an ETHERNET (IP) connection, offering a range of options for remote management, monitoring and diagnostics.

Using the integrated Webserver, a simple internet connection uses the unit's IP address to access the Connect Touch interface on the PC, facilitating everyday management tasks and maintenance operations.

Numerous communication protocols are available: MODBUS/JBUS RTU(RS485) or TC/IP as standard, LONWORKS – BACNET IP optional, enabling integration with most CMS/BMS

Several contacts are available as standard, enabling the machine to be controlled remotely by wired link:

- automatic operation control: when this contact is open, the machine stops
- setpoint 1/setpoint 2 selector: when this contact is closed, a second cooling setpoint is activated (energy storage or unoccupied mode, for example)
- heating/cooling operating mode selection
- power limitation: closing the contact concerned allows the power or refrigerating consumption of the machine to be limited by stopping one or more compressors (this limit can be set with a parameter)
- fault reporting: this contact indicates the presence of a major fault which has caused one or both refrigerating circuits to stop
- operational status reporting indicates that the unit is in production mode
- 0-10V signal output for external variable speed pump management

Contacts available as an option:

- setpoint adjustable via 4-20 mA signal: this input is used to adjust the setpoint in COOLING mode
- power limitation adjustable by 4-20 mA signal
- second power limitation level
- power indication: analogue output (0-10 V) providing an indication of the unit's load rate.
- user fault reporting enables integration of a fault in the water loop
- general fault reporting: this contact indicates that the unit has stopped completely
- alert reporting: this contact indicates the presence of a minor fault which has not caused the circuit affected to stop.
- end of storage signal: enables return to the second setpoint at the end of the storage cycle
- schedule override: closing this contact cancels the time schedule.
- drycooler management

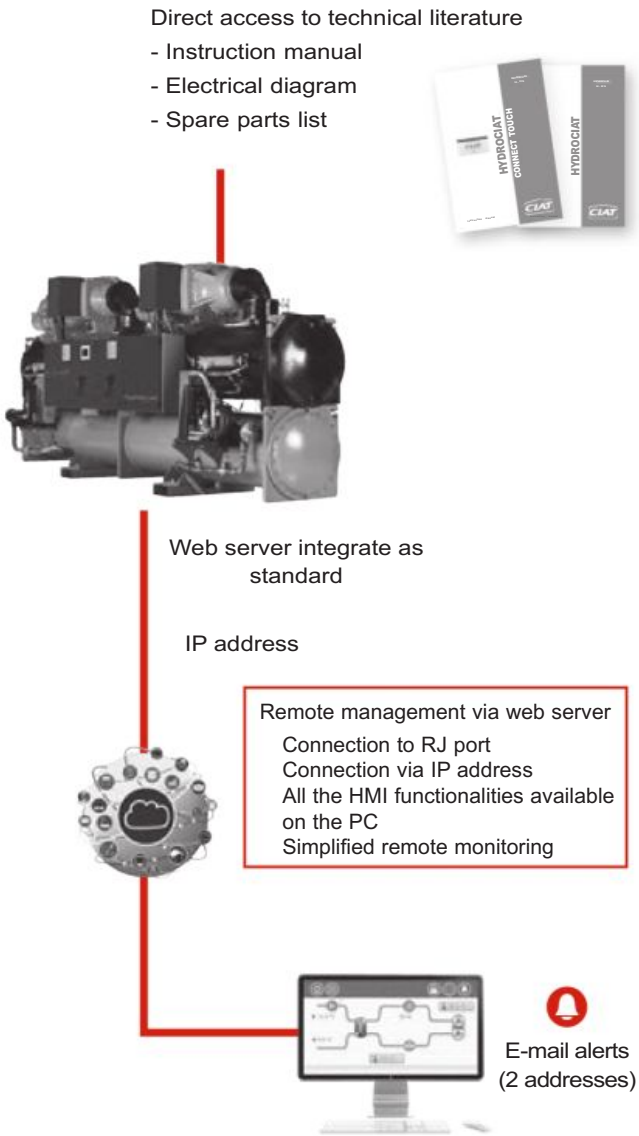

Maintenance alert as standard

Connect Touch has two maintenance reminder functions as standard, making users aware of the need to regularly perform maintenance operations and to guarantee the service life and performance of the unit. These two functions can be activated independently.

A reminder message appears on the unit's HMI screen, and stays there until it is acknowledged by the maintenance operator. The information and alert relating to these functions are available on the communication bus to be used on the CMS/BMS.

- the scheduled maintenance reminder: when activated, this function enables the period between two maintenance inspections to be set. This period may be set by the operator in either days, months or operating hours, depending on the application.
- the compulsory F-GAS sealing test maintenance reminder: when activated, this function, which is the default factory setting, enables the period between two sealing tests to be selected, according to the refrigerant charge, in compliance with the F-GAS regulations.

OPTIONS

Options	Description	Advantages	LW ST/HE
Medium-temperature brine solution	Implementation of new control algorithms and redesigned evaporator to allow chilled brine solution production down to -6°C when ethylene glycol is used (-3°C with propylene glycol)	Covers specific applications such as ice storage and industrial processes	Only sizes : 1328/1528/2628/3008
Low-temperature brine solution	Implementation of new control algorithms and redesigned evaporator to allow chilled brine solution production down to -12°C when ethylene glycol is used (-8°C with propylene glycol)	Covers specific applications such as ice storage and industrial processes	Only HE sizes : 1328/1528
Light-brine solution, down to -3°C	Implementation of new control algorithms and redesigned evaporator to allow chilled brine solution production down to -3°C when ethylene glycol is used (0°C with propylene glycol)	Matches with most application requirements for ground-sourced heat pumps and fits with many industrial processes requirements	•
Unit supplied in two assembled parts	The unit is equipped with flanges that allow disassembly of the unit on site	Facilitates installation in plant rooms with limited access	Only sizes: 4228/4408/4608/4628
Evap. single pump power/control circuit	Unit equipped with an electrical power and control circuit for one pump evaporator side	Quick and easy installation: the control of fixed speed pumps is embedded in the unit control	708-3428
230V electrical plug	230V AC power supply source provided with plug socket and transformer (180 VA, 0,8 Amps)	Permits connection of a laptop or an electrical device during unit commissioning or servicing	•
Evaporator with one pass less	Evaporator with one pass on the water side. Evaporator inlet and outlet on opposite sides.	Easy to install, depending on site. Reduced pressure drops	•
Master/slave operation	Unit equipped with supplementary water outlet temperature sensor kit (to be field installed) allowing master/slave operation of two units connected in parallel	Optimised operation of two units connected in parrallel operation with operating time equalisation	•
Condenser with one pass less	Condenser with one pass on the water side. Condenser inlet and outlet on opposite sides.	Easy to install, depending on site. Reduced pressure drops	•
21 bar evaporator	Reinforced evaporator for extension of the maximum water-side service pressure to 21 bar (standard 10 bar)	Covers applications with a high water column evaporator side (typically high buildings)	•
Single power connection point	Unit power connection via one main supply connection	Quick and easy installation	2800/4628
21 bar condenser	Reinforced condenser for extension of the maximum water-side service pressure to 21 bar (standard 10 bar)	Covers applications with a high water column condenser side (typically high buildings)	•
Reversed evaporator water connections	Evaporator with reversed water inlet/outlet	Easy installation on sites with specific requirements	•
Reversed condenser water connections	Condenser with reversed water inlet/outlet	Easy installation on sites with specific requirements	•
Condenser insulation	Thermal condenser insulation	Minimizes thermal dispersions condenser side (key option for heat pump or heat recovery applications)	•
Service valve set	Liquid line valve (evaporator inlet) and compressor suction line valve	Allow isolation of various refrigerant circuit components for simplified service and maintenance	•
Lon gateway	Bi-directional communication board complying with Lon Talk protocol	Connects the unit by communication bus to a building management system	•
Control for low cond. temperature	Output signal (0-10 V) to control the condenser water inlet valve	Simple installation: for applications with cold water at condenser inlet (ex. ground-source, groundwater-source, superficial water-source applications) the signal permits to control a 2 or 3-way valve to maintain condenser water temperature (and so condensing pressure) at acceptable values	•
Compliance with Swiss regulations	Additional tests on the water heat exchangers: supply (additional of PED documents) supplementary certificates and test certifications	Conformance with Swiss regulations	•

• ALL MODELS

Refer to the selection tool to find out which options are not compatible

OPTIONS

Options	Description	Advantages	LW ST/HE
Compliance with Russian regulations	EAC certification	Conformance with Russian regulations	●
Bacnet over IP	Bi-directional high-speed communication using BACnet protocol over Ethernet network (IP)	Easy and high-speed connection by ethernet line to a building management system. Allows access to multiple unit parameters	●
High condensing temperature	Optimized compressor for operation at high condensing temperature	Increased condenser leaving water temperature up to 63°C. Allows applications with high condensing temperature (heat pumps, installations with not generously sized dry-coolers or more generally, installations with dry-coolers in hot climate). NOTE: to ensure control of the condenser leaving water temperature, this option must be fitted on the units.	Available for all LW HE Available for LW ST 708 / 858 / 1008, and for higher LW ST sizes only with heat pump application option
Condensing temperature limitation	Limitation of the maximum condenser leaving water temperature to 45°C	Reduced maximum power input and current absorption: power cables and protection elements can therefore be downsized	●
Flanged evaporator water connection kit	Victaulic piping connections with flanged joints	Easy installation	●
Specific dry cooler control	Control box for communication with the drycooler via a bus. For OPERA drycooler need to select the cabinet with option control cabinet manage by the chiller Connect'Touch control"	Permits the use of an energy-efficient plug-and-play system	●
Flanged condenser water connection kit	Victaulic piping connections with flanged joints	Easy installation	●
Energy Management Module	Control board with additional inputs/outputs. See Contacts available in option on control description.	Extended remote control capabilities (Set-point reset by 0-20ma input, ice storage end, demand limits, boiler on/off command...)	●
7" user interface	Control supplied with a 7 inch colour touch screen user interface	Enhanced ease of use.	●
Input contact for Refrigerant leak detection	0-10 V signal to report any refrigerant leakage in the unit directly on the controlller (the leak detector itself must be supplied by the customer)	Immediate customer notification of refrigerant losses to the atmosphere, allowing timely corrective actions	●
Compliance with Australian regulations	Unit approved to Australian code	Conformance with Australian regulations	●
Low noise level	Evaporator sound insulation	3 dB(A) quiter than standard unit	1308-4608
Evap. dual pumps power/control circuit	Unit equipped with an electrical power and control circuit for two pumps evaporator side	Quick and easy installation: the control of fixed speed pumps is embedded in the unit control	708-3428
Thermal compressor insulation	The compressor is covered with a thermal insulation layer	Prevents air humidity to condensate on the compressor surface	●
Cond. single pump power/control circuit	Unit equipped with an electrical power and control circuit for one pump condenser side	Quick and easy installation: the control of fixed speed pumps is embedded in the unit control	708-3428
M2M supervision (accessory)	Monitoring solution which allows customers to track and monitor their equipment remotely in real time	Real-time expert technical support to improve equipment availability and reports at customer hand to monitor and optimize operating equipment.	●
Anti-vibration mounts (kit)	Elastomer antivibratils mounts to be place under the unit (Material classified B2 fire class according to DIN 4102).	Isolate unit from the building, avoid transmission of vibration and associate noise to the buiding. Must be associate with flexible connection on water side	●
Set point adjustment by 4-20mA signal	Connections to allow a 4-20mA signal input	Easy energy managment, allow to adjust set point by a 4-20mA external signal	●
Free Cooling dry cooler management	Control & connections to a Free Cooling Drycooler Opera or Vextra fitted with option FC control box	Easy system managment, Extended control capabilities to a dryccoler used in Free Cooling mode	●
Heat Pump application	Unit configurated for Heat Pump application, include thermal condenser insulation	Optimisation on heating mode & minimize thermal dispersions condenser side	●

● ALL MODELS

Refer to the selection tool to find out which options are not compatible

STANDARD UNIT TECHNICAL CHARACTERISTICS

LW ST / LW ST + Heat pump application option				708	858	1008	1300	1302	1500	1508	1900	2100	2300
Heating													
Standard unit Full load performances*	HW1	Nominal capacity	kW	323	365	428	546	560	632	642	799	864	941
		COP	kW/kW	6,07	6,07	6,02	5,96	6,09	5,92	5,89	6,10	5,99	5,86
	HW2	Nominal capacity	kW	317	358	421	516	529	599	632	751	813	887
		COP	kW/kW	4,59	4,57	4,61	4,54	4,59	4,47	4,52	4,56	4,49	4,46
Standard unit Seasonal energy efficiency**	HW1	$SCOP_{30/35°C}$	kWh/kWh	5,94	6,05	5,83	5,88	5,92	5,92	5,79	6,07	6,01	5,83
		ηs heat $_{30/35°C}$	%	230	234	225	227	229	229	224	235	232	225
		P_{rated}	kW	421	432	507	650	666	748	760	952	1029	1102
Cooling													
Standard unit Full load performances*	CW1	Nominal capacity	kW	273	307	359	460	473	532	538	677	730	792
		EER	kW/kW	5,32	5,30	5,24	5,23	5,35	5,18	5,17	5,39	5,30	5,19
		Eurovent class	-	A	A	A	A	A	A	A	A	A	A
	CW2	Nominal capacity	kW	345	365	458	585	566	596	656	845	884	887
		EER	kW/kW	6,71	6,24	6,57	6,40	6,28	5,74	6,21	6,50	6,21	5,70
		Eurovent class	-	A	A	A	A	A	A	A	A	A	A
Standard unit Seasonal energy efficiency**		**SEER $_{12/7°C}$ Comfort low temp.**	**kWh/kWh**	**5,84**	**5,80**	**5,64**	**5,77**	**5,75**	**5,81**	**5,77**	**6,09**	**6,13**	**5,87**
		ηs cool $_{12/7°C}$	**%**	**231**	**229**	**223**	**228**	**227**	**229**	**228**	**241**	**242**	**232**
		SEPR $_{12/7°C}$ Process high temp.	kWh/kWh	7,57	6,92	7,66	7,47	7,58	6,56	7,28	7,91	7,54	7,30
Integrated Part Load Value		IPLV.SI	kW/kW	6,843	6,708	6,722	6,664	6,897	6,905	6,891	7,351	7,321	7,184
Sound levels - standard unit													
Sound power level(1)			dB(A)	95	95	95	99	99	99	99	99	99	99
Sound pressure level at 1 m (2)			dB(A)	78	78	78	82	82	82	82	82	82	82
Sound levels - unit with Low Noise option													
Sound power level(1)			dB(A)	-	-	-	96	96	96	96	96	96	96
Sound pressure level at 1 m (2)			dB(A)	-	-	-	78	78	78	78	78	78	78
Dimensions - standard unit													
Length			mm	2724	2724	2724	2741	2741	2741	2741	3059	3059	3059
Width			mm	928	928	928	936	936	936	936	1040	1040	1040
Height			mm	1567	1567	1567	1692	1692	1692	1692	1848	1848	1848
Operating weight(3)			kg	2017	2036	2072	2575	2575	2613	2644	3247	3266	3282
Compressors				Semi-hermetic screw compressors, 50 r/s									
Circuit A				1	1	1	1	1	1	1	1	1	1
Refrigerant - standard unit				R-134a									
Circuit A			kg	84	80	78	82	82	82	82	145	135	125
			$teqCO_2$	120	114	112	117	117	117	117	207	193	179

*	In accordance with standard EN14511-3:2013.
**	In accordance with standard EN14825:2016, average climate
HW1	Heating mode conditions: Evaporator entering/leaving water temperature 10°C/7°C, condenser entering/leaving water temperature 30°C/35°C, evaporator and condenser fouling factor 0 m^2. k/W
HW2	Heating mode conditions: Evaporator entering/leaving water temperature 10°C/7°C, condenser entering/leaving water temperature 40°C/45°C, evaporator and condenser fouling factor 0 m^2. k/W
CW1	Cooling mode conditions: Evaporator water entering/leaving temperature 12°C/7°C, condenser entering/leaving water temperature 30°C/35°C, evaporator and condenser fouling factor 0 m^2.K/W
CW2	Cooling mode conditions: Evaporator water entering/leaving temperature 23°C/18°C, condenser entering/leaving water temperature 30°C/35°C, evaporator and condenser fouling factor 0 m^2.K/W
ηs heat $_{30/35°C}$ & SCOP $_{30/35°C}$	Values calculated in accordance with EN14825:2016
ηs cool $_{12/7°C}$ & SEER $_{12/7°C}$	**Bold values compliant to Ecodesign regulation: (EU) No 2016/2281 for Comfort application**
SEPR $_{12/7°C}$	Values calculated in accordance with EN14825:2016
IPLV.SI	Calculations according to standard performances AHRI 551-591 (SI)
(1)	In dB ref=10^{-12} W, (A) weighting. Declared dualnumber noise emission values in accordance with ISO 4871 (with an associated uncertainty of +/-3dB(A)). Measured in accordance with ISO 9614-1 and certified by Eurovent.
(2)	In dB ref 20µPa, (A) weighting. Declared dualnumber noise emission values in accordance with ISO 4871 (with an associated uncertainty of +/-3dB(A)). For information, calculated from the sound power level Lw(A).
(3)	Weight shown is guideline only. Please refer to the unit nameplate

EUROVENT CERTIFIED PERFORMANCE
www.eurovent-certification.com

Eurovent certified values

2

STANDARD UNIT TECHNICAL CHARACTERISTICS

LW ST / LW ST + Heat pump application option		708	858	1008	1300	1302	1500	1508	1900	2100	2300
Oil - standard unit		SW220									
Circuit A	l	23,5	23,5	23,5	32	32	32	32	36	36	36
Capacity control		Connect Touch, electronic expansion valves (EXV)									
Minimum capacity (4)	%	15	15	15	15	15	15	15	15	15	15
Evaporator		Shell and tube flooded type									
Water volume	l	50	56	61	70	70	70	70	109	109	109
Water connections (Victaulic)	in	5	5	5	5	5	5	5	6	6	6
Drain and vent connections (NPT)	in	3/8	3/8	3/8	3/8	3/8	3/8	3/8	3/8	3/8	3/8
Max. water-side operating pressure	kPa	1000	1000	1000	1000	1000	1000	1000	1000	1000	1000
Condenser		Shell and tube type									
Water volume	l	55	55	55	76	76	76	76	109	109	109
Water connections (Victaulic)	in	5	5	5	5	5	5	5	6	6	6
Drain and vent connections (NPT)	in	3/8	3/8	3/8	3/8	3/8	3/8	3/8	3/8	3/8	3/8
Max. water-side operating pressure	kPa	1000	1000	1000	1000	1000	1000	1000	1000	1000	1000

(4) Minimum unit capacity corresponds to a physical state of the unit and is given for indication only. The actual capacity at this stage depends on operating conditions.

STANDARD UNIT TECHNICAL CHARACTERISTICS

LW ST / LW ST + Heat pump application option				2308	2800	3000	3008	3400	3800	4200	4600	4408	4608
Heating													
Standard unit Full load performances*	HW1	Nominal capacity	kW	992	1204	1258	1349	1473	1578	1714	1829	1941	2027
		COP	kW/kW	6,04	5,88	5,79	5,89	6,26	6,03	5,84	5,73	6,01	5,98
	HW2	Nominal capacity	kW	967	1138	1190	1320	1384	1481	1612	1717	1891	1969
		COP	kW/kW	4,64	4,48	4,42	4,54	4,73	4,57	4,46	4,41	4,67	4,68
Standard unit Seasonal energy efficiency**	HW1	$SCOP_{30/35°C}$	kWh/kWh	5,90	6,05	5,96	5,99	6,19	5,84	5,64	5,47	5,73	5,70
		ηs heat $_{30/35°C}$	%	228	234	231	232	240	226	218	211	221	220
		P_{rated}	kW	1160	1433	1498	1599	1754	1879	2041	2178	2292	2389
Cooling													
Standard unit Full load performances*	CW1	Nominal capacity	kW	839	1017	1060	1141	1257	1342	1453	1547	1654	1728
		EER	kW/kW	5,39	5,25	5,18	5,30	5,68	5,51	5,36	5,29	5,59	5,60
		Eurovent class	-	A	A	A	A	A	A	A	A	A	A
	CW2	Nominal capacity	kW	922	1297	1348	1351	1678	1837	1916	1903	1944	2009
		EER	kW/kW	5,84	6,44	6,33	6,13	7,25	7,12	6,70	6,25	6,36	6,30
		Eurovent class	-	A	A	A	A	A	A	A	A	A	A
Standard unit Seasonal energy efficiency**		**SEER $_{12/7°C}$ Comfort low temp.**	**kWh/kWh**	**6,27**	**6,47**	**6,53**	**6,44**	**7,14**	**6,93**	**6,75**	**6,63**	**7,05**	**7,03**
		ηs cool $_{12/7°C}$	**%**	**248**	**256**	**258**	**255**	**283**	**274**	**267**	**262**	**279**	**278**
		SEPR $_{12/7°C}$ Process high temp.	kWh/kWh	6,97	7,56	7,47	7,17	8,42	8,19	7,61	7,43	7,44	7,32
Integrated Part Load Value		IPLV.SI	kW/kW	7,175	7,539	7,751	7,596	8,066	7,835	7,730	7,575	7,957	7,892
Sound levels - standard unit													
Sound power level(1)			dB(A)	99	102	102	102	102	102	102	102	102	102
Sound pressure level at 1 m (2)			dB(A)	82	84	84	84	83	83	83	83	83	83
Sound levels - unit with Low Noise option													
Sound power level(1)			dB(A)	96	99	99	99	99	99	99	99	99	99
Sound pressure level at 1 m (2)			dB(A)	78	80	80	80	80	80	80	80	80	80
Dimensions - standard unit													
Length			mm	2780	4025	4025	4025	4730	4730	4730	4730	4790	4790
Width			mm	1042	1036	1036	1036	1156	1156	1156	1156	1902	1902
Height			mm	1898	1870	1870	1925	2051	2051	2051	2051	1515	1515
Operating weight(3)			kg	3492	5370	5408	5698	7066	7267	7305	7337	8681	8699
Compressors				Semi-hermetic screw compressors, 50 r/s									
Circuit A				1	1	1	1	1	1	1	1	1	1
Circuit B				-	1	1	1	1	1	1	1	1	1
Refrigerant - standard unit				R-134a									
Circuit A			kg	158	85	85	105	120	115	110	105	195	195
			$teqCO_2$	226	122	122	150	172	164	157	150	279	279
Circuit B			kg	-	85	85	105	120	115	110	105	195	195
			$teqCO_2$	-	122	122	150	172	164	157	150	279	279

*	In accordance with standard EN14511-3:2013.
**	In accordance with standard EN14825:2016, average climate
HW1	Heating mode conditions: Evaporator entering/leaving water temperature 10°C/7°C, condenser entering/leaving water temperature 30°C/35°C, evaporator and condenser fouling factor 0 m^2. k/W
HW2	Heating mode conditions: Evaporator entering/leaving water temperature 10°C/7°C, condenser entering/leaving water temperature 40°C/45°C, evaporator and condenser fouling factor 0 m^2. k/W
CW1	Cooling mode conditions: Evaporator water entering/leaving temperature 12°C/7°C, condenser entering/leaving water temperature 30°C/35°C, evaporator and condenser fouling factor 0 m².K/W
CW2	Cooling mode conditions: Evaporator water entering/leaving temperature 23°C/18°C, condenser entering/leaving water temperature 30°C/35°C, evaporator and condenser fouling factor 0 m².K/W
ηs heat $_{30/35°C}$ & SCOP $_{30/35°C}$	Values calculated in accordance with EN14825:2016
ηs cool $_{12/7°C}$ & SEER $_{12/7°C}$	**Bold values compliant to Ecodesign regulation: (EU) No 2016/2281 for Comfort application**
SEPR $_{12/7°C}$	Values calculated in accordance with EN14825:2016
IPLV.SI	Calculations according to standard performances AHRI 551-591 (SI)
(1)	In dB ref=10^{-12} W, (A) weighting. Declared dualnumber noise emission values in accordance with ISO 4871 (with an associated uncertainty of +/-3dB(A)). Measured in accordance with ISO 9614-1 and certified by Eurovent.
(2)	In dB ref 20µPa, (A) weighting. Declared dualnumber noise emission values in accordance with ISO 4871 (with an associated uncertainty of +/-3dB(A)). For information, calculated from the sound power level Lw(A).
(3)	Weight shown is guideline only. Please refer to the unit nameplate

EUROVENT CERTIFIED PERFORMANCE
www.eurovent-certification.com

Eurovent certified values

2

STANDARD UNIT TECHNICAL CHARACTERISTICS

LW ST / LW ST + Heat pump application option		2308	2800	3000	3008	3400	3800	4200	4600	4408	4608
Oil - standard unit		SW220									
Circuit A	l	36	32	32	32	36	36	36	36	36	36
Circuit B	l	-	32	32	32	32	36	36	36	36	36
Capacity control		Connect Touch, electronic expansion valves (EXV)									
Minimum capacity (4)	%	15	10	10	10	10	10	10	10	10	10
Evaporator		Shell and tube flooded type									
Water volume	l	98	182	182	205	301	301	301	301	354	354
Water connections (Victaulic)	in	6	6	6	8	8	8	8	8	8	8
Drain and vent connections (NPT)	in	3/8	3/8	3/8	3/8	3/8	3/8	3/8	3/8	3/8	3/8
Max. water-side operating pressure	kPa	1000	1000	1000	1000	1000	1000	1000	1000	1000	1000
Condenser		Shell and tube type									
Water volume	l	137	193	193	193	340	340	340	340	426	426
Water connections (Victaulic)	in	8	8	8	8	8	8	8	8	8	8
Drain and vent connections (NPT)	in	3/8	3/8	3/8	3/8	3/8	3/8	3/8	3/8	3/8	3/8
Max. water-side operating pressure	kPa	1000	1000	1000	1000	1000	1000	1000	1000	1000	1000

(4) Minimum unit capacity corresponds to a physical state of the unit and is given for indication only. The actual capacity at this stage depends on operating conditions.

242

HIGH EFFICIENCY UNIT TECHNICAL CHARACTERISTICS

LW HE / LW HE + Heat pump application option				1328	1528	1928	2128	2328	2628	3028	3428	3828	4228	4628
Heating														
Standard unit Full load performances*	HW1	Nominal capacity	kW	596	676	860	923	1009	1216	1352	1545	1705	1890	2048
		COP	kW/kW	6,48	6,39	6,58	6,36	6,35	6,42	6,35	6,38	6,14	6,46	6,35
	HW2	Nominal capacity	kW	583	662	842	904	982	1191	1320	1509	1663	1846	1989
		COP	kW/kW	4,91	4,84	4,97	4,80	4,85	4,90	4,86	4,89	4,71	4,89	4,87
Standard unit Seasonal energy efficiency**	HW1	$SCOP_{30/35°C}$	kWh/kWh	6,27	6,33	6,50	6,27	6,27	6,43	6,37	6,22	6,01	6,38	6,29
		ηs heat $_{30/35°C}$	%	243	245	252	243	243	249	247	241	232	247	244
		P_{rated}	kW	706	802	1019	1093	1196	1441	1600	1831	2021	2241	2428
Cooling														
Standard unit Full load performances*	CW1	Nominal capacity	kW	509	577	737	786	861	1039	1157	1323	1452	1626	1756
		EER	kW/kW	5,71	5,65	5,83	5,62	5,65	5,73	5,78	5,80	5,58	5,87	5,79
		Eurovent class	-	A	A	A	A	A	A	A	A	A	A	A
	CW2	Nominal capacity	kW	616	705	936	1007	1088	1251	1395	1683	1926	2062	2215
		EER	kW/kW	6,85	6,81	7,24	7,00	6,92	6,85	6,83	7,14	7,10	7,21	7,00
		Eurovent class	-	A	A	A	A	A	A	A	A	A	A	A
Standard unit Seasonal energy efficiency**		**SEER $_{12/7°C}$ Comfort low temp.**	**kWh/kWh**	**5,79**	**5,82**	**6,60**	**6,36**	**6,03**	**6,75**	**7,17**	**7,00**	**6,83**	**7,27**	**7,25**
		ηs cool $_{12/7°C}$	**%**	**229**	**230**	**261**	**251**	**238**	**267**	**284**	**277**	**270**	**288**	**287**
		SEPR $_{12/7°C}$ Process high temp.	kWh/kWh	7,87	7,91	8,13	7,69	7,53	7,88	7,99	8,16	7,84	8,02	7,66
Integrated Part Load Value		IPLV.SI	kW/kW	7,323	7,468	7,666	7,513	7,439	7,747	8,125	8,068	7,852	8,201	7,900
Sound levels - standard unit														
Sound power level(1)			dB(A)	99	99	99	99	99	102	102	102	102	102	102
Sound pressure level at 1 m (2)			dB(A)	82	82	81	81	81	83	83	83	83	83	83
Sound levels - standard unit + Low noise level option														
Sound power level(1)			dB(A)	96	96	96	96	96	99	99	99	99	99	99
Sound pressure level at 1 m (2)			dB(A)	78	78	78	78	78	80	80	80	80	80	80
Dimensions - standard unit														
Length			mm	3059	3059	3290	3290	3290	4730	4730	4730	4730	4832	4832
Width			mm	936	936	1069	1069	1069	1039	1039	1162	1162	2129	2129
Height			mm	1743	1743	1950	1950	1950	1997	1997	2051	2051	1562	1562
Operating weight(3)			kg	2981	3020	3912	3947	3965	6872	6950	7542	7752	10910	10946
Compressors				Semi-hermetic screw compressors, 50 r/s										
Circuit A				1	1	1	1	1	1	1	1	1	1	1
Circuit B				-	-	-	-	-	1	1	1	1	1	1
Refrigerant - standard unit				R-134a										
Circuit A			kg	130	130	180	175	170	120	120	130	130	240	250
			$teqCO_2$	186	186	257	250	243	172	172	186	186	343	358
Circuit B			kg	-	-	-	-	-	120	120	150	130	240	250
			$teqCO_2$	-	-	-	-	-	172	172	215	186	343	358

*	In accordance with standard EN14511-3:2013.
**	In accordance with standard EN14825:2016, average climate
HW1	Heating mode conditions: Evaporator entering/leaving water temperature 10°C/7°C, condenser entering/leaving water temperature 30°C/35°C, evaporator and condenser fouling factor 0 m^2. k/W
HW2	Heating mode conditions: Evaporator entering/leaving water temperature 10°C/7°C, condenser entering/leaving water temperature 40°C/45°C, evaporator and condenser fouling factor 0 m^2. k/W
CW1	Cooling mode conditions: Evaporator water entering/leaving temperature 12°C/7°C, condenser entering/leaving water temperature 30°C/35°C, evaporator and condenser fouling factor 0 m².K/W
CW2	Cooling mode conditions: Evaporator water entering/leaving temperature 23°C/18°C, condenser entering/leaving water temperature 30°C/35°C, evaporator and condenser fouling factor 0 m².K/W
ηs heat $_{30/35°C}$ & SCOP $_{30/35°C}$	Values calculated in accordance with EN14825:2016
ηs cool $_{12/7°C}$ & SEER $_{12/7°C}$	**Bold values compliant to Ecodesign regulation: (EU) No 2016/2281 for Comfort application**
SEPR $_{12/7°C}$	Values calculated in accordance with EN14825:2016
IPLV.SI	Calculations according to standard performances AHRI 551-591 (SI)
(1)	In dB ref=10^{-12} W, (A) weighting. Declared dualnumber noise emission values in accordance with ISO 4871 (with an associated uncertainty of +/-3dB(A)). Measured in accordance with ISO 9614-1 and certified by Eurovent.
(2)	In dB ref 20µPa, (A) weighting. Declared dualnumber noise emission values in accordance with ISO 4871 (with an associated uncertainty of +/-3dB(A)). For information, calculated from the sound power level Lw(A).
(3)	Weight shown is guideline only. Please refer to the unit nameplate

EUROVENT CERTIFIED PERFORMANCE
www.eurovent-certification.com

Eurovent certified values

2

HIGH EFFICIENCY UNIT TECHNICAL CHARACTERISTICS

LW HE / LW HE + Heat pump application option		1328	1528	1928	2128	2328	2628	3028	3428	3828	4228	4628
Oil - standard unit		SW220										
Circuit A	l	32	32	36	36	36	32	32	36	36	36	36
Circuit B	l	-	-	-	-	-	32	32	32	36	36	36
Capacity control		Connect Touch, electronic expansion valves (EXV)										
Minimum capacity (4)	%	15	15	15	15	15	10	10	10	10	10	10
Evaporator		Shell and tube flooded type										
Water volume	l	101	101	154	154	154	293	293	321	321	473	473
Water connections (Victaulic)	in	6	6	8	8	8	8	8	8	8	10	10
Drain and vent connections (NPT)	in	3/8	3/8	3/8	3/8	3/8	3/8	3/8	3/8	3/8	3/8	3/8
Max. water-side operating pressure	kPa	1000	1000	1000	1000	1000	1000	1000	1000	1000	1000	1000
Condenser		Shell and tube type										
Water volume	l	103	103	148	148	148	316	316	340	340	623	623
Water connections (Victaulic)	in	6	6	8	8	8	8	8	8	8	10	10
Drain and vent connections (NPT)	in	3/8	3/8	3/8	3/8	3/8	3/8	3/8	3/8	3/8	3/8	3/8
Max. water-side operating pressure	kPa	1000	1000	1000	1000	1000	1000	1000	1000	1000	1000	1000

(4) Minimum unit capacity corresponds to a physical state of the unit and is given for indication only. The actual capacity at this stage depends on operating conditions.

244

ELECTRICAL DATA NOTES FOR STANDARD UNITS

LW ST		708	858	1008	1300	1302	1500	1508	1900	2100	2300	2308	2800	3000	3008	3400	3800	4200	4600	4408	4608
Power circuit																					
Nominal voltage	V-ph-Hz	400-3-50																			
Voltage range	V	360-440																			
Control circuit		24 V via the built-in transformer																			
Nominal start-up current(1)																					
Circuit A	A	233	233	303	414	414	414	414	587	587	587	587	414	414	414	587	587	587	587	587	587
Circuit B	A	-	-	-	-	-	-	-	-	-	-	-	414	414	414	414	587	587	587	587	587
Single power connection point option	A	-	-	-	-	-	-	-	-	-	-	-	558	574	574	747	780	801	819	819	819
Maximum start-up current(2)																					
Circuit A	A	233	233	303	414	414	414	414	587	587	587	587	414	414	414	587	587	587	587	587	587
Circuit B	A	-	-	-	-	-	-	-	-	-	-	-	414	414	414	414	587	587	587	587	587
Single power connection point option	A	-	-	-	-	-	-	-	-	-	-	-	631	656	656	829	882	904	938	938	938
Cosine phi																					
Nominal(3)		0,83	0,85	0,83	0,87	0,88	0,89	0,89	0,88	0,89	0,90	0,90	0,88	0,89	0,89	0,88	0,88	0,89	0,9	0,9	0,9
Maximum(4)		0,89	0,89	0,88	0,90	0,90	0,91	0,91	0,90	0,91	0,92	0,92	0,90	0,91	0,91	0,90	0,90	0,91	0,92	0,92	0,92
Total harmonic distortion(4)	%	0	0	0	0	0	0	0	0	0	0	0	0	0	0	0	0	0	0	0	0
Maximum power input*																					
Circuit A	kW	76	89	97	128	135	151	151	184	200	223	223	150	151	151	184	184	200	223	223	223
Circuit B	kW	-	-	-	-	-	-	-	-	-	-	-	135	151	151	151	184	200	223	202	223
Single power connection point option	kW	-	-	-	-	-	-	-	-	-	-	-	284	301	301	334	367	399	447	425	447
Nominal input current(3)																					
Circuit A	A	84	96	113	136	144	162	162	193	214	232	232	162	162	162	193	193	214	232	232	232
Circuit B	A	-	-	-	-	-	-	-	-	-	-	-	144	162	162	162	193	214	232	214	232
Single power connection point option	A	-	-	-	-	-	-	-	-	-	-	-	306	324	324	355	386	427	464	446	464
Maximum input current (Un)*																					
Circuit A	A	123	145	160	206	217	242	242	295	317	351	351	242	242	242	295	295	317	351	351	351
Circuit B	A	-	-	-	-	-	-	-	-	-	-	-	217	242	242	242	295	317	351	317	351
Single power connection point option	A	-	-	-	-	-	-	-	-	-	-	-	459	484	484	537	590	634	702	668	702
Maximum input current (Un -10%)(4)																					
Circuit A	A	138	162	178	218	230	260	260	304	340	358	358	260	260	260	304	304	340	358	358	358
Circuit B	A	-	-	-	-	-	-	-	-	-	-	-	230	260	260	260	304	340	358	340	358
Single power connection point option	A	-	-	-	-	-	-	-	-	-	-	-	490	520	520	564	608	680	716	698	716
Maximum input power with condensing temperature limitation option*																					
Circuit A	kW	67	79	87	114	118	133	134	173	183	205	205	133	133	133	173	173	183	207	207	207
Circuit B	kW	-	-	-	-	-	-	-	-	-	-	-	118	133	133	133	173	183	207	185	207
Single power connection point option	kW	-	-	-	-	-	-	-	-	-	-	-	251	265	265	305	346	365	414	391	414
Maximum input current (Un) with condensing temperature limitation option*																					
Circuit A	A	109	129	142	183	191	212	212	278	290	325	325	212	212	212	278	278	290	325	325	325
Circuit B	A	-	-	-	-	-	-	-	-	-	-	-	191	212	212	212	278	290	325	290	325
Single power connection point option	A	-	-	-	-	-	-	-	-	-	-	-	403	424	424	490	556	580	650	615	650

(1) Instantaneous start-up current (maximum operating current of the smallest compressor(s) + locked rotor current or reduced start-up current of the largest compressor). Values obtained at standard Eurovent unit operating conditions: evaporator entering/leaving water temperature = 12°C/7°C, condenser entering/leaving water temperature = 30°C/35°C.
(2) Instantaneous start-up current (maximum operating current of the smallest compressor(s) + locked rotor current or reduced start-up current of the largest compressor). Values obtained at operation point with maximum unit power input.
(3) Values obtained at standard Eurovent unit operating conditions: evaporator entering/leaving water temperature = 12°C/7°C, condenser entering/leaving water temperature = 30°C/35°C.
(4) Values obtained at operation point with maximum unit power input.
* Values obtained in operation with maximum unit power input. Values given on the unit name plate.

245

HIGH EFFICIENCY UNIT ELECTRICAL DATA NOTES

LW HE		1328	1528	1928	2128	2328	2628	3028	3428	3828	4228	4628
Power circuit												
Nominal voltage	V-ph-Hz	400-3-50										
Voltage range	V	360-440										
Control circuit		24 V via the built-in transformer										
Nominal start-up current(1)												
Circuit A	A	414	414	587	587	587	414	414	587	587	587	587
Circuit B	A	-	-	-	-	-	414	414	414	587	587	587
Single power connection point option	A	-	-	-	-	-	556	574	747	780	801	819
Maximum start-up current(2)												
Circuit A	A	414	414	587	587	587	414	414	587	587	587	587
Circuit B	A	-	-	-	-	-	414	414	414	587	587	587
Single power connection point option	A	-	-	-	-	-	631	656	829	882	904	938
Cosine phi												
Nominal(3)		0,88	0,89	0,88	0,89	0,90	0,86	0,87	0,88	0,88	0,89	0,90
Maximum(4)		0,90	0,90	0,90	0,91	0,92	0,89	0,90	0,90	0,90	0,91	0,92
Total harmonic distortion(4)	%	0	0	0	0	0	0	0	0	0	0	0
Maximum power input*												
Circuit A	kW	135	151	184	200	223	134	151	184	184	200	223
Circuit B	kW	-	-	-	-	-	134	151	151	184	200	223
Single power connection point option	kW	-	-	-	-	-	267	301	334	367	399	447
Nominal input current(3)												
Circuit A	A	144	162	193	214	232	144	162	193	193	214	232
Circuit B	A	-	-	-	-	-	144	162	162	193	214	232
Single power connection point option	A	-	-	-	-	-	288	324	355	386	427	464
Maximum input current (Un)*												
Circuit A	A	217	242	295	317	351	217	242	295	295	317	351
Circuit B	A	-	-	-	-	-	217	242	242	295	317	351
Single power connection point option	A	-	-	-	-	-	434	484	537	590	634	702
Maximum input current (Un -10%)(4)												
Circuit A	A	230	260	304	340	358	230	260	304	304	340	358
Circuit B	A	-	-	-	-	-	230	260	260	304	340	358
Single power connection point option	A	-	-	-	-	-	460	520	564	608	680	716
Maximum input power with condensing temperature limitation option*												
Circuit A	kW	118	133	173	183	207	118	133	173	173	183	207
Circuit B	kW	-	-	-	-	-	118	133	133	173	183	207
Single power connection point option	kW						235	265	305	346	365	414
Maximum input current (Un) with condensing temperature limitation option*												
Circuit A	A	191	212	278	290	325	191	212	278	278	290	325
Circuit B	A	-	-	-	-	-	191	212	212	278	290	325
Single power connection point option	A	-	-	-	-	-	382	424	490	556	580	650

(1) Instantaneous start-up current (maximum operating current of the smallest compressor(s) + locked rotor current or reduced start-up current of the largest compressor). Values obtained at standard Eurovent unit operating conditions: evaporator entering/leaving water temperature = 12°C/7°C, condenser entering/leaving water temperature = 30°C/35°C.
(2) Instantaneous start-up current (maximum operating current of the smallest compressor(s) + locked rotor current or reduced start-up current of the largest compressor). Values obtained at operation with maximum unit power input.
(3) Values obtained at standard Eurovent unit operating conditions: evaporator entering/leaving water temperature = 12°C/7°C, condenser entering/leaving water temperature = 30°C/35°C.
(4) Values obtained at operation with maximum unit power input.
* Values obtained in operation with maximum unit power input. Values given on the unit name plate.

246

TECHNICAL CHARACTERISTICS
STANDARD UNITS FOR HIGH CONDENSING TEMPERATURES

LW ST + High condensing option				708	858	1008	1300	1302	1500	1508	1900	2100	2300
Heating													
Unit with high condensing option Full load performances*	HW1	Nominal capacity	kW	334	373	421	511	542	607	626	769	847	890
		COP	kW/kW	5,59	5,59	5,54	5,22	5,47	5,36	5,48	5,39	5,38	5,3
	HW2	Nominal heating capacity	kW	325	362	408	478	506	566	606	716	789	829
		COP	kW/kW	4,62	4,59	4,55	4,29	4,50	4,43	4,54	4,45	4,45	4,41
	HW3	Nominal capacity	kW	316	352	396	446	471	527	587	665	734	773
		COP	kW/kW	3,85	3,83	3,79	3,50	3,68	3,63	3,78	3,65	3,65	3,63
Unit with high condensing option Seasonal energy efficiency**	HW1	$SCOP_{30/35°C}$	kWh/kWh	5,81	5,93	5,89	5,57	5,70	5,69	5,62	5,53	5,57	5,30
		ηs heat $_{30/35°C}$	%	224	229	227	215	220	220	217	213	215	204
	HW3	$SCOP_{47/55°C}$	kWh/kWh	4,56	4,61	4,55	4,20	4,37	4,41	4,42	4,24	4,31	4,46
		ηs heat $_{47/55°C}$	%	174	176	174	160	167	169	169	162	164	170
		P_{rated}	kW	416	419	473	540	571	638	700	807	890	936
Cooling													
Unit with high condensing option Full load performances*	CW1	Nominal capacity	kW	282	313	352	NA	NA	NA	NA	NA	NA	NA
		EER	kW/kW	4,89	4,87	4,82	NA	NA	NA	NA	NA	NA	NA
		Eurovent class	-	B	B	B	NA	NA	NA	NA	NA	NA	NA
Unit with high condensing option Seasonal energy efficiency**		**SEER $_{12/7°C}$ Comfort low temp.**	**kWh/kWh**	**5,76**	**5,83**	**5,80**	NA	NA	NA	NA	NA	NA	NA
		ηs cool $_{12/7°C}$	**%**	**227**	**230**	**229**	NA	NA	NA	NA	NA	NA	NA
		SEPR $_{12/7°C}$ Process high temp.	kWh/kWh	6,45	6,49	6,35	NA	NA	NA	NA	NA	NA	NA
Integrated Part Load Value		IPLV.SI	kW/kW	6,491	6,657	6,658	6,051	6,301	6,425	6,306	6,052	6,332	6,180
Sound levels - standard unit													
Sound power level(1)			dB(A)	95	95	95	99	99	99	99	102	102	102
Sound pressure level at 1 m (2)			dB(A)	78	78	78	82	82	82	82	84	84	84
Sound levels - standard unit + low noise level option													
Sound power level(1)			dB(A)	-	-	-	96	96	96	96	100	100	100
Sound pressure level at 1 m (2)			dB(A)	-	-	-	78	78	78	78	82	82	82
Dimensions													
Length			mm	2724	2724	2724	2741	2741	2741	2741	3059	3059	3059
Width			mm	928	928	928	936	936	936	936	1090	1090	1090
Height			mm	1567	1567	1567	1692	1692	1692	1692	1858	1858	1858
Operating weight(3)			kg	2017	2036	2072	2575	2575	2613	2644	3407	3438	3462
Compressors				Semi-hermetic screw compressors, 50 r/s									
Circuit A				1	1	1	1	1	1	1	1	1	1
Refrigerant(3)				R-134a									
Circuit A			kg	84	80	78	82	82	82	82	145	135	125
			$teqCO_2$	120	114	112	117	117	117	117	207	193	179

*	In accordance with standard EN14511-3:2013.
**	In accordance with standard EN14825:2016, average climate
HW1	Heating mode conditions: Evaporator entering/leaving water temperature 10°C/7°C, condenser entering/leaving water temperature 30°C/35°C, evaporator and condenser fouling factor 0 m^2. k/W
HW2	Heating mode conditions: Evaporator entering/leaving water temperature 10°C/7°C, condenser entering/leaving water temperature 40°C/45°C, evaporator and condenser fouling factor 0 m^2. k/W
HW3	Heating mode conditions: Evaporator entering/leaving water temperature 10°C/7°C, condenser entering/leaving water temperature 47°C/55°C, evaporator and condenser fouling factor 0 m^2. k/W
CW1	Cooling mode conditions: Evaporator water entering/leaving temperature 12°C/7°C, condenser entering/leaving water temperature 30°C/35°C, evaporator and condenser fouling factor 0 m^2.K/W
ηs heat $_{30/35°C}$ & SCOP $_{30/35°C}$	Values calculated in accordance with EN14825:2016
ηs heat $_{47/55°C}$ & SCOP $_{47/55°C}$	Values calculated in accordance with EN14825:2016
ηs cool $_{12/7°C}$ & SEER $_{12/7°C}$	**Bold values compliant to Ecodesign regulation: (EU) No 2016/2281 for Comfort application**
SEPR $_{12/7°C}$	Values calculated in accordance with EN14825:2016
IPLV.SI	Calculations according to standard performances AHRI 551-591 (SI)
NA	Non Authorized for the specific application for CEE market
(1)	In dB ref=10^{-12} W, (A) weighting. Declared dualnumber noise emission values in accordance with ISO 4871 (with an associated uncertainty of +/-3dB(A)). Measured in accordance with ISO 9614-1 and certified by Eurovent.
(2)	In dB ref 20µPa, (A) weighting. Declared dualnumber noise emission values in accordance with ISO 4871 (with an associated uncertainty of +/-3dB(A)). For information, calculated from the sound power level Lw(A).
(3)	Weight shown is guideline only. Please refer to the unit nameplate

EUROVENT CERTIFIED PERFORMANCE www.eurovent-certification.com

Eurovent certified values

2

Technical characteristics
Standard units for high condensing temperatures

LW ST + High condensing option		708	858	1008	1300	1302	1500	1508	1900	2100	2300
Oil		SW220									
Circuit A	l	23,5	23,5	23,5	32	32	32	32	36	36	36
Capacity control		Connect Touch, electronic expansion valves (EXV)									
Minimum capacity (4)	%	30	30	30	30	30	30	30	15	15	15
Evaporator		Shell and tube flooded type									
Net water volume	l	50	56	61	70	70	70	70	109	109	109
Water connections (Victaulic)	in	5	5	5	5	5	5	5	6	6	6
Drain and vent connections (NPT)	in	3/8	3/8	3/8	3/8	3/8	3/8	3/8	3/8	3/8	3/8
Max. water-side operating pressure	kPa	1000	1000	1000	1000	1000	1000	1000	1000	1000	1000
Condenser		Shell and tube type									
Net water volume	l	55	55	55	76	76	76	76	109	109	109
Water connections (Victaulic)	in	5	5	5	5	5	5	5	6	6	6
Drain and vent connections (NPT)	in	3/8	3/8	3/8	3/8	3/8	3/8	3/8	3/8	3/8	3/8
Max. water-side operating pressure	kPa	1000	1000	1000	1000	1000	1000	1000	1000	1000	1000

(4) Minimum unit capacity corresponds to a physical state of the unit and is given for indication only. The actual capacity at this stage depends on operating conditions.

248

TECHNICAL CHARACTERISTICS
STANDARD UNITS FOR HIGH CONDENSING TEMPERATURES

LW ST + High condensing option				2308	2800	3000	3008	3400	3800	4200	4600	4408	4608
Heating													
Unit with high condensing option Full load performances*	HW1	Nominal capacity	kW	983	1181	1250	1345	1466	1576	1702	1821	1962	2032
		COP	kW/kW	5,49	5,44	5,37	5,47	5,69	5,4	5,32	5,28	5,45	5,41
	HW2	Nominal heating capacity	kW	958	1099	1163	1294	1348	1465	1583	1678	1904	1975
		COP	kW/kW	4,57	4,52	4,47	4,55	4,71	4,52	4,45	4,45	4,57	4,59
	HW3	Nominal capacity	kW	932	1019	1078	1246	1275	1357	1469	1573	1845	1915
		COP	kW/kW	3,80	3,73	3,69	3,8	3,91	3,71	3,67	3,7	3,85	3,84
Unit with high condensing option Seasonal energy efficiency**	HW1	$SCOP_{30/35°C}$	kWh/kWh	5,68	5,70	5,61	5,61	5,78	5,42	5,46	5,14	5,52	5,47
		ηs heat $_{30/35°C}$	%	219	220	216	216	223	209	210	198	213	211
	HW3	$SCOP_{47/55°C}$	kWh/kWh	4,66	4,66	4,63	4,63	4,71	4,43	4,50	4,56	4,70	4,68
		ηs heat $_{47/55°C}$	%	178	178	177	177	181	169	172	175	180	179
		P_{rated}	kW	1111	1237	1309	1490	1549	1648	1783	1907	2203	2285
Cooling													
Integrated Part Load Value		IPLV.SI	kW/kW	6,593	6,849	6,853	6,757	6,950	6,411	6,918	6,954	6,947	7,118
Sound levels - standard unit													
Sound power level(1)			dB(A)	102	102	102	102	105	105	105	105	105	105
Sound pressure level at 1 m (2)			dB(A)	84	84	84	84	86	86	86	86	86	86
Sound levels - standard unit + low noise level option													
Sound power level(1)			dB(A)	100	99	99	99	103	103	103	103	103	103
Sound pressure level at 1 m (2)			dB(A)	82	80	80	80	84	84	84	84	84	84
Dimensions													
Length			mm	2780	4025	4025	4025	4730	4730	4730	4730	4790	4790
Width			mm	1090	1036	1036	1036	1201	1201	1201	1201	1947	1947
Height			mm	1920	1870	1870	1925	2071	2071	2071	2071	1535	1535
Operating weight(3)			kg	3672	5370	5408	5698	7233	7554	7622	7670	9006	9032
Compressors				Semi-hermetic screw compressors, 50 r/s									
Circuit A				1	1	1	1	1	1	1	1	1	1
Circuit B				-	1	1	1	1	1	1	1	1	1
Refrigerant(3)				R-134a									
Circuit A			kg	158	85	85	105	120	115	110	105	195	195
			$teqCO_2$	226	122	122	150	172	164	157	150	279	279
Circuit B			kg	-	85	85	105	120	115	110	105	195	195
			$teqCO_2$	-	122	122	150	172	164	157	150	279	279

*	In accordance with standard EN14511-3:2013.
**	In accordance with standard EN14825:2016, average climate
HW1	Heating mode conditions: Evaporator entering/leaving water temperature 10°C/7°C, condenser entering/leaving water temperature 30°C/35°C, evaporator and condenser fouling factor 0 m^2. k/W
HW2	Heating mode conditions: Evaporator entering/leaving water temperature 10°C/7°C, condenser entering/leaving water temperature 40°C/45°C, evaporator and condenser fouling factor 0 m^2. k/W
HW3	Heating mode conditions: Evaporator entering/leaving water temperature 10°C/7°C, condenser entering/leaving water temperature 47°C/55°C, evaporator and condenser fouling factor 0 m^2. k/W
CW1	Cooling mode conditions: Evaporator water entering/leaving temperature 12°C/7°C, condenser entering/leaving water temperature 30°C/35°C, evaporator and condenser fouling factor 0 m^2.K/W
ηs heat $_{30/35°C}$ & SCOP $_{30/35°C}$	Values calculated in accordance with EN14825:2016
ηs heat $_{47/55°C}$ & SCOP $_{47/55°C}$	Values calculated in accordance with EN14825:2016
IPLV.SI	Calculations according to standard performances AHRI 551-591 (SI)
(1)	In dB ref=10^{-12} W, (A) weighting. Declared dualnumber noise emission values in accordance with ISO 4871 (with an associated uncertainty of +/-3dB(A)). Measured in accordance with ISO 9614-1 and certified by Eurovent.
(2)	In dB ref 20µPa, (A) weighting. Declared dualnumber noise emission values in accordance with ISO 4871 (with an associated uncertainty of +/-3dB(A)). For information, calculated from the sound power level Lw(A).
(3)	Weight shown is guideline only. Please refer to the unit nameplate

EUROVENT CERTIFIED PERFORMANCE www.eurovent-certification.com

Eurovent certified values

2

Technical characteristics
Standard units for high condensing temperatures

LW ST + High condensing option		2308	2800	3000	3008	3400	3800	4200	4600	4408	4608
Oil		SW220									
Circuit A	l	36	32	32	32	36	36	36	36	36	36
Circuit B	l	-	32	32	32	32	36	36	36	36	36
Capacity control		Connect'Touch, electronic expansion valves (EXV)									
Minimum capacity (4)	%	15	15	15	15	10	10	10	10	10	10
Evaporator		Multi-pipe flooded type									
Net water volume	l	98	182	182	205	301	301	301	301	354	354
Water connections (Victaulic)	in	6	6	6	8	8	8	8	8	8	8
Drain and vent connections (NPT)	in	3/8	3/8	3/8	3/8	3/8	3/8	3/8	3/8	3/8	3/8
Max. water-side operating pressure	kPa	1000	1000	1000	1000	1000	1000	1000	1000	1000	1000
Condenser		Multi-pipe flooded type									
Net water volume	l	137	193	193	193	340	340	340	340	426	426
Water connections (Victaulic)	in	8	8	8	8	8	8	8	8	8	8
Drain and vent connections (NPT)	in	3/8	3/8	3/8	3/8	3/8	3/8	3/8	3/8	3/8	3/8
Max. water-side operating pressure	kPa	1000	1000	1000	1000	1000	1000	1000	1000	1000	1000

(4) Minimum unit capacity corresponds to a physical state of the unit and is given for indication only. The actual capacity at this stage depends on operating conditions.

TECHNICAL CHARACTERISTICS
HIGH EFFICIENCY UNITS FOR HIGH CONDENSING TEMPERATURES

LW HE + high condensing option				1328	1528	1928	2128	2328	2628	3028	3428	3828	4228	4628
Heating														
Unit with high condensing option Full load performances*	HW1	Nominal capacity	kW	607	676	854	924	995	1208	1397	1537	1723	1909	2028
		COP	kW/kW	5,94	5,95	5,82	5,66	5,87	5,71	5,85	5,64	5,47	5,83	5,88
	HW2	Nominal heating capacity	kW	584	651	828	897	1003	1164	1341	1485	1669	1850	1997
		COP	kW/kW	4,88	4,89	4,81	4,68	4,94	4,73	4,86	4,69	4,58	4,84	4,93
	HW3	Nominal capacity	kW	563	627	801	871	984	1123	1288	1433	1610	1789	1989
		COP	kW/kW	4,02	4,04	3,97	3,87	4,11	3,90	4,02	3,91	3,83	4,00	4,14
Unit with high condensing option Seasonal energy efficiency**	HW1	$SCOP_{30/35°C}$	kWh/kWh	6,13	6,17	6,38	6,10	6,12	5,88	5,99	5,93	5,92	6,04	6,20
		ηs heat $_{30/35°C}$	%	237	239	247	236	237	227	232	229	229	234	240
	HW3	$SCOP_{47/55°C}$	kWh/kWh	4,72	4,78	4,94	4,72	4,97	4,72	4,89	4,81	4,87	5,04	5,06
		ηs heat $_{47/55°C}$	%	181	183	189	181	191	181	187	185	187	194	194
		P_{rated}	kW	674	750	957	1039	1175	1343	1543	1713	1926	2139	2377
Cooling														
Unit with high condensing option Full load performances*	CW1	Nominal cooling capacity	kW	517	576	725	781	844	1024	1192	1302	1453	1633	1727
		EER	kW/kW	5,20	5,24	5,09	4,94	5,17	5,05	5,29	5,02	4,89	5,22	5,29
		Eurovent class		A	A	A	B	A	A	A	B	B	A	A
Unit with high condensing option Seasonal energy efficiency**		**SEER $_{12/7°C}$ Comfort low temp.**	**kWh/kWh**	**6,03**	**6,14**	**6,44**	**6,21**	**5,75**	**6,19**	**6,55**	**6,38**	**6,48**	**6,95**	**6,55**
		ηs cool $_{12/7°C}$	**%**	**238**	**242**	**255**	**245**	**227**	**245**	**259**	**252**	**256**	**275**	**259**
		SEPR $_{12/7°C}$ Process high temp.	kWh/kWh	6,54	6,56	6,81	6,53	6,63	6,37	6,67	6,67	6,53	6,92	7,00
Integrated Part Load Value		IPLV.SI	kW/kW	6,735	6,920	7,116	6,861	7,056	6,706	7,277	7,156	7,265	7,544	7,818
Sound levels - standard unit														
Sound power level(1)			dB(A)	99	99	102	102	102	102	102	105	105	105	105
Sound pressure level at 1 m (2)			dB(A)	82	82	84	84	84	83	83	86	86	86	86
Sound levels - standard unit + low noise level option														
Sound power level(1)			dB(A)	96	96	100	100	100	99	99	103	103	103	103
Sound pressure level at 1 m (2)			dB(A)	78	78	82	82	82	80	80	84	84	84	84
Dimensions														
Length			mm	3059	3059	3290	3290	3290	4730	4730	4730	4730	4832	4832
Width			mm	936	936	1105	1105	1105	1039	1039	1202	1202	2174	2174
Height			mm	1743	1743	1970	1970	1970	1997	1997	2071	2071	1585	1585
Operating weight(3)			kg	2981	3020	4072	4117	4145	6872	6950	7721	8059	11225	11279
Compressors				Semi-hermetic screw compressors, 50 r/s										
Circuit A				1	1	1	1	1	1	1	1	1	1	1
Circuit B				-	-	-	-	-	1	1	1	1	1	1

*	In accordance with standard EN14511-3:2013.
**	In accordance with standard EN14825:2016, average climate
HW1	Heating mode conditions: Evaporator entering/leaving water temperature 10°C/7°C, condenser entering/leaving water temperature 30°C/35°C, evaporator and condenser fouling factor 0 m^2. k/W
HW2	Heating mode conditions: Evaporator entering/leaving water temperature 10°C/7°C, condenser entering/leaving water temperature 40°C/45°C, evaporator and condenser fouling factor 0 m^2. k/W
HW3	Heating mode conditions: Evaporator entering/leaving water temperature 10°C/7°C, condenser entering/leaving water temperature 47°C/55°C, evaporator and condenser fouling factor 0 m^2. k/W
CW1	Cooling mode conditions: Evaporator water entering/leaving temperature 12°C/7°C, condenser entering/leaving water temperature 30°C/35°C, evaporator and condenser fouling factor 0 m².K/W
ηs heat $_{30/35°C}$ & SCOP $_{30/35°C}$	Values calculated in accordance with EN14825:2016
ηs heat $_{47/55°C}$ & SCOP $_{47/55°C}$	Values calculated in accordance with EN14825:2016
ηs cool $_{12/7°C}$ & SEER $_{12/7°C}$	**Bold values compliant to Ecodesign regulation: (EU) No 2016/2281 for Comfort application**
SEPR $_{12/7°C}$	Values calculated in accordance with EN14825:2016
IPLV.SI	Calculations according to standard performances AHRI 551-591 (SI).
(1)	In dB ref=10^{-12} W, (A) weighting. Declared dualnumber noise emission values in accordance with ISO 4871 (with an associated uncertainty of +/-3dB(A)). Measured in accordance with ISO 9614-1 and certified by Eurovent.
(2)	In dB ref 20µPa, (A) weighting. Declared dualnumber noise emission values in accordance with ISO 4871 (with an associated uncertainty of +/-3dB(A)). For information, calculated from the sound power level Lw(A).
(3)	Weight shown is guideline only. Please refer to the unit nameplate

EUROVENT CERTIFIED PERFORMANCE www.eurovent-certification.com

Eurovent certified values

TECHNICAL CHARACTERISTICS
HIGH EFFICIENCY UNITS FOR HIGH CONDENSING TEMPERATURES

LW HE + high condensing option		1328	1528	1928	2128	2328	2628	3028	3428	3828	4228	4628
Refrigerant(3)		R-134a										
Circuit A	kg	130	130	180	175	170	120	120	130	130	240	250
	teqCO_2	186	186	257	250	243	172	172	186	186	343	358
Circuit B	kg	-	-	-	-	-	120	120	150	130	240	250
	teqCO_2	-	-	-	-	-	172	172	215	186	343	358
Oil		SW220										
Circuit A	l	32	32	36	36	36	32	32	36	36	36	36
Capacity control		Connect'Touch, electronic expansion valves (EXV)										
Minimum capacity (4)	%	30	30	15	15	15	15	15	10	10	10	10
Evaporator		Multi-pipe flooded type										
Net water volume	l	101	101	154	154	154	293	293	321	321	473	473
Water connections (Victaulic)	in	6	6	8	8	8	8	8	8	8	10	10
Drain and vent connections (NPT)	in	3/8	3/8	3/8	3/8	3/8	3/8	3/8	3/8	3/8	3/8	3/8
Max. water-side operating pressure	kPa	1000	1000	1000	1000	1000	1000	1000	1000	1000	1000	1000
Condenser		Multi-pipe flooded type										
Net water volume	l	103	103	148	148	148	316	316	340	340	623	623
Water connections (Victaulic)	in	6	6	8	8	8	8	8	10	10	10	10
Drain and vent connections (NPT)	in	3/8	3/8	3/8	3/8	3/8	3/8	3/8	3/8	3/8	3/8	3/8
Max. water-side operating pressure	kPa	1000	1000	1000	1000	1000	1000	1000	1000	1000	1000	1000

(4) Minimum unit capacity corresponds to a physical state of the unit and is given for indication only. The actual capacity at this stage depends on operating conditions.

252

Electrical data notes
Standard units for high condensing temperatures

LW ST		708	858	1008	1300	1302	1500	1508	1900	2100	2300	2308	2800	3000	3008	3400	3800	4200	4600	4408	4608
Power circuit																					
Nominal voltage	V-ph-Hz	400-3-50																			
Voltage range	V	360-440																			
Control circuit		24 V via the built-in transformer																			
Nominal start-up current(1)																					
Circuit A	A	303	388	388	587	587	587	587	772	772	772	772	587	587	587	772	772	772	772	772	772
Circuit B	A	-	-	-	-	-	-	-	-	-	-	-	587	587	587	587	772	772	772	772	772
Single power connection point option	A	-	-	-	-	-	-	-	-	-	-	-	757	757	757	943	965	986	1004	1004	1004
Maximum start-up current(2)																					
Circuit A	A	303	388	388	587	587	587	587	772	772	772	772	587	587	587	772	772	772	772	772	772
Circuit B	A	-	-	-	-	-	-	-	-	-	-	-	587	587	587	587	772	772	772	772	772
Single power connection point option	A	-	-	-	-	-	-	-	-	-	-	-	887	887	887	1072	1172	1202	1232	1004	1232
Cosine phi																					
Nominal(3)		0,79	0,78	0,79	0,83	0,85	0,85	0,85	0,84	0,86	0,87	0,87	0,85	0,85	0,85	0,86	0,85	0,86	0,87	0,86	0,87
Maximum(4)		0,88	0,87	0,88	0,90	0,90	0,91	0,91	0,90	0,90	0,90	0,90	0,90	0,91	0,91	0,91	0,91	0,91	0,91	0,91	0,91
Total harmonic distortion(4)	%	0	0	0	0	0	0	0	0	0	0	0	0	0	0	0	0	0	0	0	0
Maximum power input*																					
Circuit A	kW	97	111	122	156	173	191	191	249	268	286	286	191	191	191	252	252	271	290	290	290
Circuit B	kW	-	-	-	-	-	-	-	-	-	-	-	173	191	191	191	252	271	290	271	290
Single power connection point option	kW	-	-	-	-	-	-	-	-	-	-	-	364	382	382	443	504	542	580	562	580
Nominal input current(3)																					
Circuit A	A	95	109	125	150	162	171	171	193	214	232	232	171	171	171	210	210	230	250	250	250
Circuit B	A	-	-	-	-	-	-	-	-	-	-	-	162	171	171	171	210	230	250	230	250
Single power connection point option	A	-	-	-	-	-	-	-	-	-	-	-	333	342	342	381	420	460	500	480	500
Maximum input current (Un)*																					
Circuit A	A	160	185	200	250	275	300	300	400	430	460	460	300	300	300	400	400	430	460	460	460
Circuit B	A	-	-	-	-	-	-	-	-	-	-	-	275	300	300	300	400	430	460	430	460
Single power connection point option	A	-	-	-	-	-	-	-	-	-	-	-	575	600	600	700	800	860	920	890	920
Maximum input current (Un -10%)(4)																					
Circuit A	A	176	206	224	270	300	330	330	419	455	476	476	330	330	330	419	419	455	476	476	476
Circuit B	A	-	-	-	-	-	-	-	-	-	-	-	300	330	330	330	419	455	476	455	476
Single power connection point option	A	-	-	-	-	-	-	-	-	-	-	-	630	660	660	749	838	910	952	931	952

(1) Instantaneous start-up current (maximum operating current of the smallest compressor(s) + locked rotor current or reduced start-up current of the largest compressor). Values obtained at standard Eurovent unit operating conditions: evaporator entering/leaving water temperature = 12°C/7°C, condenser entering/leaving water temperature = 30°C/35°C.
(2) Instantaneous start-up current (maximum operating current of the smallest compressor(s) + locked rotor current or reduced start-up current of the largest compressor). Values obtained at operation with maximum unit power input.
(3) Values obtained at standard Eurovent unit operating conditions: evaporator entering/leaving water temperature = 12°C/7°C, condenser entering/leaving water temperature = 30°C/35°C.
(4) Values obtained at operation with maximum unit power input.
* Values obtained in operation with maximum unit power input. Values given on the unit name plate.

253

Electrical data notes
High efficiency units for high condensing temperatures

LW HE		1328	1528	1928	2128	2328	2628	3028	3428	3828	4228	4628
Power circuit												
Nominal voltage	V-ph-Hz	400-3-50										
Voltage range	V	360-440										
Control circuit		24 V via the built-in transformer										
Nominal start-up current(1)												
Circuit A	A	587	587	772	772	772	587	587	772	772	772	772
Circuit B	A	-	-	-	-	-	587	587	587	772	772	772
Single power connection point option	A	-	-	-	-	-	749	757	943	965	986	1004
Maximum start-up current(2)												
Circuit A	A	587	587	772	772	772	587	587	772	772	772	772
Circuit B	A	-	-	-	-	-	587	587	587	772	772	772
Single power connection point option	A	-	-	-	-	-	862	887	1072	1172	1202	1232
Cosine phi												
Nominal(3)		0,88	0,88	0,84	0,86	0,87	0,87	0,88	0,86	0,85	0,86	0,87
Maximum(4)		0,91	0,92	0,90	0,90	0,90	0,91	0,92	0,91	0,91	0,91	0,91
Total harmonic distortion(4)	%	0	0	0	0	0	0	0	0	0	0	0
Maximum power input*												
Circuit A	kW	173	191	252	271	290	173	191	252	252	271	290
Circuit B	kW	-	-	-	-	-	173	191	191	252	271	290
Single power connection point option	kW	-	-	-	-	-	346	382	443	504	542	580
Nominal input current(3)												
Circuit A	A	162	171	210	230	250	162	171	210	210	230	250
Circuit B	A	-	-	-	-	-	162	171	171	210	230	250
Single power connection point option	A	-	-	-	-	-	324	342	381	420	460	500
Maximum input current (Un)*												
Circuit A	A	275	300	400	430	460	275	300	400	400	430	460
Circuit B	A	-	-	-	-	-	275	300	300	400	430	460
Single power connection point option	A	-	-	-	-	-	550	600	700	800	860	920
Maximum input current (Un -10%)(4)												
Circuit A	A	300	330	419	455	476	300	330	419	419	455	476
Circuit B	A	-	-	-	-	-	300	330	330	419	455	476
Single power connection point option	A	-	-	-	-	-	600	660	749	838	910	952

(1) Instantaneous start-up current (maximum operating current of the smallest compressor(s) + locked rotor current or reduced start-up current of the largest compressor). Values obtained at standard Eurovent unit operating conditions: evaporator entering/leaving water temperature = 12°C/7°C, condenser entering/leaving water temperature = 30°C/35°C.
(2) Instantaneous start-up current (maximum operating current of the smallest compressor(s) + locked rotor current or reduced start-up current of the largest compressor). Values obtained at operation with maximum unit power input.
(3) Values obtained at standard Eurovent unit operating conditions: evaporator entering/leaving water temperature = 12°C/7°C, condenser entering/leaving water temperature = 30°C/35°C.
(4) Values obtained at operation with maximum unit power input.
* Values obtained in operation with maximum unit power input. Values given on the unit name plate.

TECHNICAL CHARACTERISTICS FOR LOW TEMPERATURE UNITS

■ Standard and high-efficiency LW units (Medium and low temperature brine solution)

LW ST / HE				1328	1528	2628	3008
Cooling							
Unit with medium temperature brine solution Full load performances*	CW3	Nominal capacity	kW	304	336	623	689
		EER	kW/kW	3.43	3.43	3.42	3.38
Unit with low temperature brine solution Full load performances*	CW4	Nominal capacity	kW	263	292	NA	NA
		EER	kW/kW	3,1	3,13	NA	NA
Unit with low temperature brine solution Seasonal energy efficiency**		**SEPR $_{-2/-8°C}$ Process medium temp.**	**kWh/kWh**	**3.87**	**3.84**	NA	NA

*	In accordance with standard EN14511-3:2013.
**	In accordance with standard EN14825:2016, average climate
***	With EG 30 %
CW3	Cooling mode conditions: Evaporator Ethylene Glycol 20% entering/leaving temperature 0°C/-5°C, condenser entering/leaving water temperature 30°C/35°C, evaporator and condenser fouling factor 0 m².K/W
CW4	Cooling mode conditions: Evaporator Ethylen Glycol 30% entering/leaving temperature -2°C/-8°C, condenser entering/leaving water temperature 30°C/35°C, evaporator and condenser fouling factor 0 m².K/W
SEPR $_{-2/-8°C}$	**Bold values compliant to Applicable Ecodesign (EU) No 2015/1095 for pocess application**
NA	Non Authorized for the specific application for CEE market

2

ELECTRICAL DATA NOTES FOR LOW TEMPERATURE UNITS

■ Standard and high efficiency units (medium and low temperature brine solution)

		Medium and low temperature brine solution			
LW ST / HE		**1328**	**1528**	**2628**	**3008**
Power circuit					
Nominal voltage	V-ph-Hz	400-3-50			
Voltage range	V	360-440			
Control circuit		24 V via the built-in transformer			
Nominal start-up current(1)					
Circuits A/B	A	587/-	587/-	587/587	587/587
Single power connection point option	A	-	-	749	757
Maximum start-up current(2)					
Circuits A/B	A	587/-	587/-	587/587	587/587
Single power connection point option	A	-	-	862	887
Cosine phi					
Nominal(3)		0,88	0,88	0,87	0,85
Maximum(4)		0,91	0,92	0,91	0,91
Total harmonic distortion(4)		0	0	0	0
Maximum power input*					
Circuits A/B	kW	173/-	191/-	173/173	191/191
Single power connection point option	kW	-	-	346	382
Nominal input current(3)					
Circuits A/B	A	162/-	171/-	162/162	171/171
Single power connection point option	A	-	-	324	342
Maximum input current (Un)*					
Circuits A/B	A	275/-	300/-	275/275	300/300
Single power connection point option	A	-	-	550	600
Maximum input current (Un -10%)(4)					
Circuits A/B	A	300/-	330/-	300/300	330/330
Single power connection point option	A	-	-	600	660

(1) Instantaneous start-up current (maximum operating current of the smallest compressor(s) + locked rotor current or reduced start-up current of the largest compressor). Values obtained at standard Eurovent unit operating conditions: evaporator entering/leaving water temperature = 12°C/7°C, condenser entering/leaving water temperature = 30°C/35°C.
(2) Instantaneous start-up current (maximum operating current of the smallest compressor(s) + locked rotor current or reduced start-up current of the largest compressor). Values obtained at operation with maximum unit power input.
(3) Values obtained at standard Eurovent unit operating conditions: evaporator entering/leaving water temperature = 12°C/7°C, condenser entering/leaving water temperature = 30°C/35°C. Maximum values obtained at operation with maximum unit power input.
(4) Values obtained at operation with maximum unit power input.
* Values obtained in operation with maximum unit power input. Values given on the unit name plate.

256

ELECTRICAL DATA NOTES

Standard and high efficiency units

Notes, electrical data and operating conditions HYDROCIAT LW

- As standard:
  LW 708 to 2328 units have a single power connection point located immediately upstream of the main disconnect switch.
  HYDROCIAT LW 2800 to 4628 units have two connection points located immediately upstream of the main disconnect switches.
- The control box includes the following standard features:
  - one main disconnect switch per circuit(1),
  -Starter and motor protection devices for each compressor
  - anti-short cycle protection devices(1),
  - Control devices
- Field connections:
  All connections to the system and the electrical installations must be in full accordance with all applicable codes.
- The CIAT LW units are designed and built to ensure conformance with local codes. The recommendations of European standard EN 60204-1 (corresponds to IEC 60204-1) (machine safety - electrical machine components - part 1: general regulations) are specifically taken into account, when designing the electrical equipment.
- The absence of power supply disconnect switch(es) and short-cycle protection devices in option : Non disconnect switch, but short circuit protection, is an important factor that has to be taken into consideration at the installation site.
  Units equipped with one of these two options are supplied with a declaration of incorporation, as required by the machinery directive.

Notes:

- **Generally the recommendations of IEC 60364 are accepted as compliance with the requirements of the installation directives. Conformance with EN 60204-1 is the best means of ensuring compliance with the Machines Directive.**
- **Annex B of EN 60204 1 describes the electrical characteristics used for the operation of the machines.**

1. The operating environment for the HYDROCIAT LW units is specified below:
- Environment(2): Environment as classified in EN 60721 (corresponds to IEC 60721):
  - indoor installation
  - ambient temperature range: minimum temperature +5°C to +42°C, class AA4
  - altitude: lower than or equal to 2000 m
  - presence of water: class AD2 (possibility of water droplets)
  -presence of hard solids, class 4S2 (no significant dust present)
  - presence of corrosive and polluting substances, class 4C2 (negligible)
2. Power supply frequency variation: ± 2 Hz.
3. The neutral (N) line must not be connected directly to the unit (if necessary use a transformer).
4. Overcurrent protection of the power supply conductors is not provided with the unit.
5. The factory installed disconnect switch(es)/circuit breaker(s) is (are) of a type suitable for power interruption in accordance with EN 60947-3 (corresponds to IEC 60947-3).
6. The units are designed for connection to TN networks (IEC 60364). For IT networks the earth connection must not be at the network earth. Provide a local earth, consult competent local organisations to complete the electrical installation.

NOTE: If particular aspects of an actual installation do not conform to the conditions described above, or if there are other conditions which should be considered, always contact your local CIAT representative.

(1) Not provided for units equipped with no disconnect switch but short circuit protection option.
(2) The required protection level for this class is IP21B or 1PX1B (according to reference document IEC 60529). All HYDROCIAT LW units fulfil this protection condition. In general the casings fulfil class IP23 or IPX3B.

257

Dimensions

■ **LW ST - 708-2308**
LW HE - 1328-2328

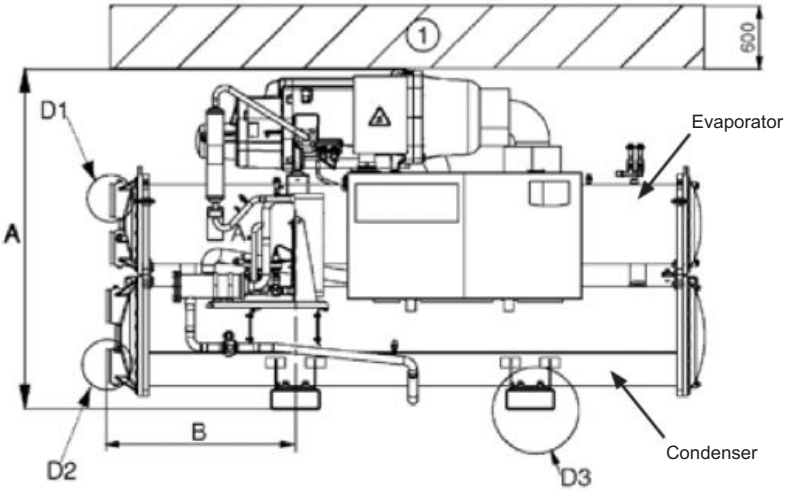

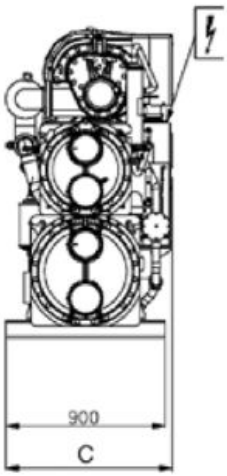

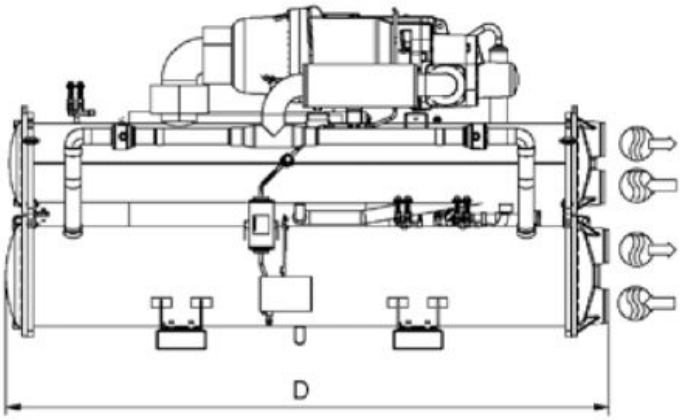

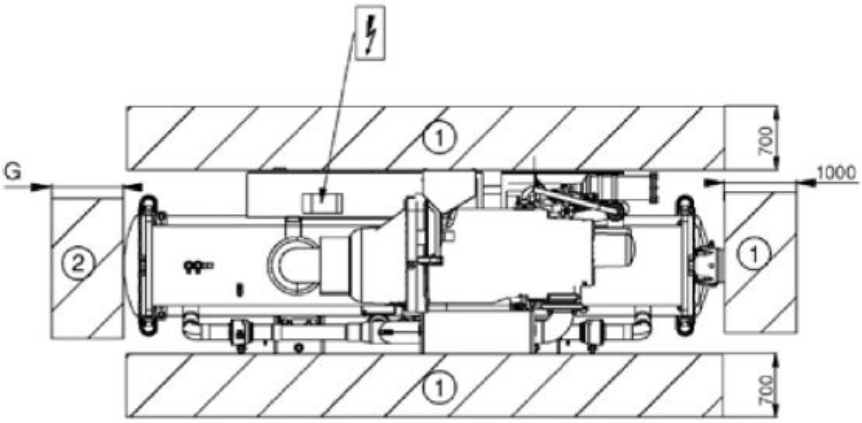

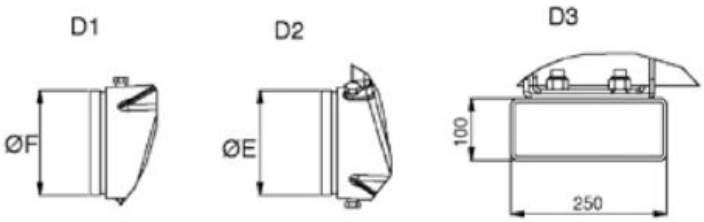

Units sizes	Dimensions in mm						
	A	B	C	D	E	F	G
LW ST standard units							
708	1567	800	928	2724	141,3	141,3	2600
858	1567	800	928	2724	141,3	141,3	2600
1008	1567	800	928	2724	141,3	141,3	2600
1300	1693	810	936	2742	141,3	141,3	2600
1302	1693	810	936	2742	141,3	141,3	2600
1500	1693	810	936	2742	141,3	141,3	2600
1508	1693	810	936	2742	141,3	141,3	2600
1900	1848	968	1044	3059	168,3	168,3	2800
2100	1848	968	1044	3059	168,3	168,3	2800
2300	1848	968	1044	3059	168,3	168,3	2800
2308	1898	828	1044	2780	219,1	168,3	2600
LW HE high efficiency units							
1328	1743	968	936	3059	168,3	168,3	2800
1528	1743	968	936	3059	168,3	168,3	2800
1928	1950	1083	1065	3290	219,1	219,1	3100
2128	1950	1083	1070	3290	219,1	219,1	3100
2328	1950	1083	1070	3290	219,1	219,1	3100
LW ST with high condensing option							
708	1567	800	928	2724	141,3	141,3	2600
858	1567	800	928	2724	141,3	141,3	2600
1008	1567	800	928	2724	141,3	141,3	2600
1300	1693	810	936	2742	141,3	141,3	2600
1302	1693	810	936	2742	141,3	141,3	2600
1500	1693	810	936	2742	141,3	141,3	2600
1508	1693	810	936	2742	141,3	141,3	2600
1900	1868	968	1090	3059	168,3	168,3	2800
2100	1868	968	1090	3059	168,3	168,3	2800
2300	1868	968	1090	3059	168,3	168,3	2800
2308	1920	828	1090	2780	168,3	219,1	2600
LW HE with high condensing option							
1328	1743	968	936	3059	168,3	168,3	2800
1528	1743	968	936	3059	168,3	168,3	2800
1928	1970	1083	1105	3290	219,1	219,1	3100
2128	1970	1083	1105	3290	219,1	219,1	3100
2328	1970	1083	1105	3290	219,1	219,1	3100

Key:

All dimensions are in mm.

(1) Required clearance for maintenance

(2) Recommended clearance for tube removal

Water inlet

Water outlet

Electrical cabinet

NOTE: Drawings are not contractually binding. Before designing an installation, consult the certified dimensional drawings, available on request.

DIMENSIONS

- **LW ST - 2800-4600**
  LW HE - 2628-3828

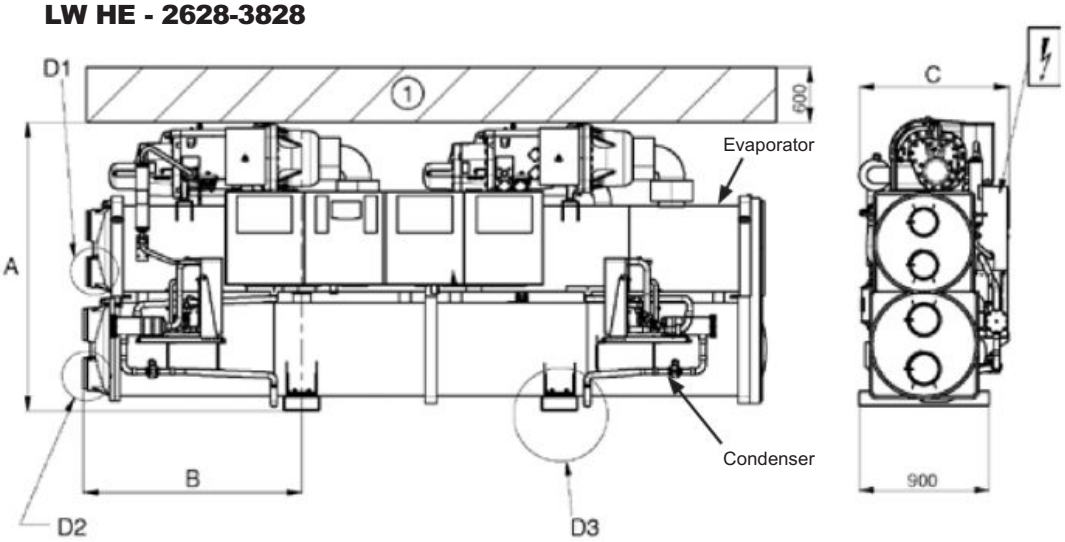

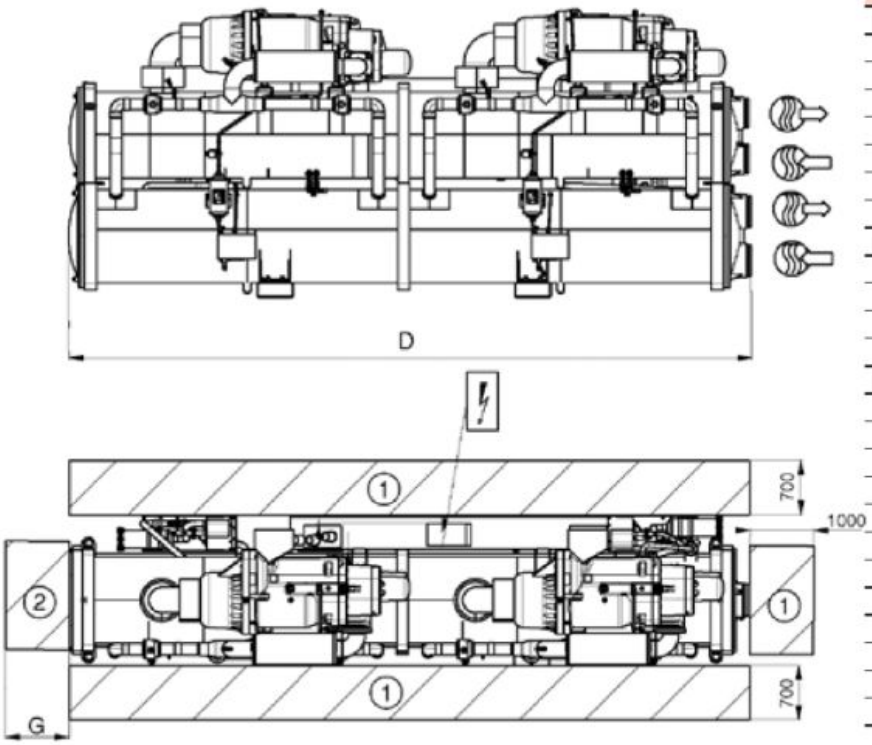

Units sizes	Dimensions in mm						
	A	B	C	D	E	F	G
LW ST standard units							
2800	1870	950	1036	4025	219,1	168,3	3800
3000	1870	950	1036	4025	219,1	168,3	3800
3008	1925	950	1036	4025	219,1	219,1	3800
3400	2051	1512	1162	4730	219,1	219,1	4500
3800	2051	1512	1162	4730	219,1	219,1	4500
4200	2051	1512	1162	4730	219,1	219,1	4500
4600	2051	1512	1162	4730	219,1	219,1	4500
LW HE high efficiency units							
2628	1997	1512	1039	4730	219,1	219,1	4500
3028	1997	1512	1039	4730	219,1	219,1	4500
3428	2051	1512	1162	4730	219,1	219,1	4500
3828	2051	1512	1162	4730	219,1	219,1	4500
LW ST with high condensing option							
2800	1870	950	1036	4025	219,1	168,3	3800
3000	1870	950	1036	4025	219,1	168,3	3800
3008	2925	950	1036	4025	219,1	219,1	3800
3400	2071	1512	1202	4730	219,1	219,1	4500
3800	2071	1512	1202	4730	219,1	219,1	4500
4200	2071	1512	1202	4730	219,1	219,1	4500
4600	2071	1512	1202	4730	219,1	219,1	4500
LW HE with high condensing option							
2628	1997	1512	1039	4730	219,1	219,1	4500
3028	1997	1512	1039	4730	219,1	219,1	4500
3428	2071	1512	1202	4730	219,1	219,1	4500
3828	2071	1512	1202	4730	219,1	219,1	4500

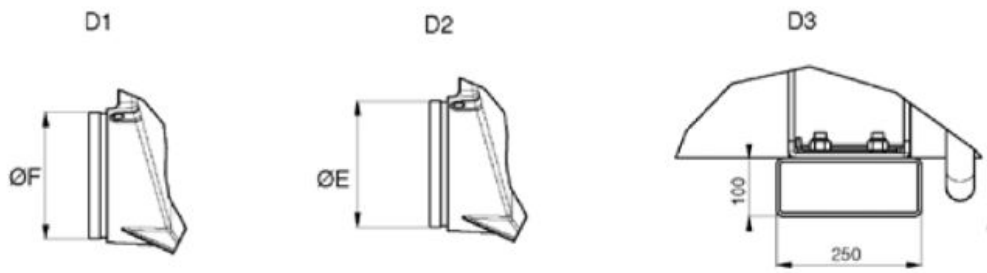

Key:
All dimensions are in mm.
1 Required clearance for maintenance
2 Recommended clearance for tube removal
Water inlet
Water outlet
Electrical cabinet

NOTE: Drawings are not contractually binding. Before designing an installation, consult the certified dimensional drawings, available on request.

DIMENSIONS

- **LW ST - 4408-4608**
  LW HE - 4228-4628

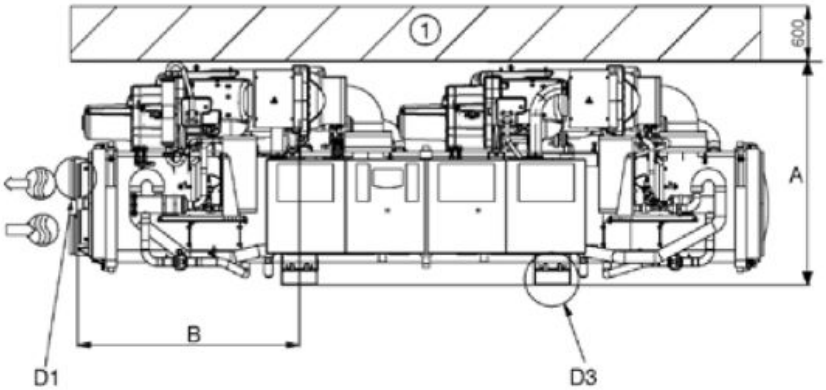

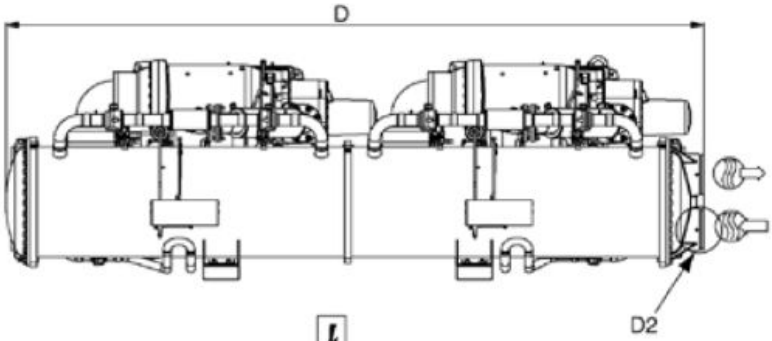

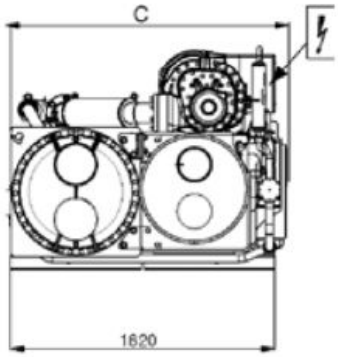

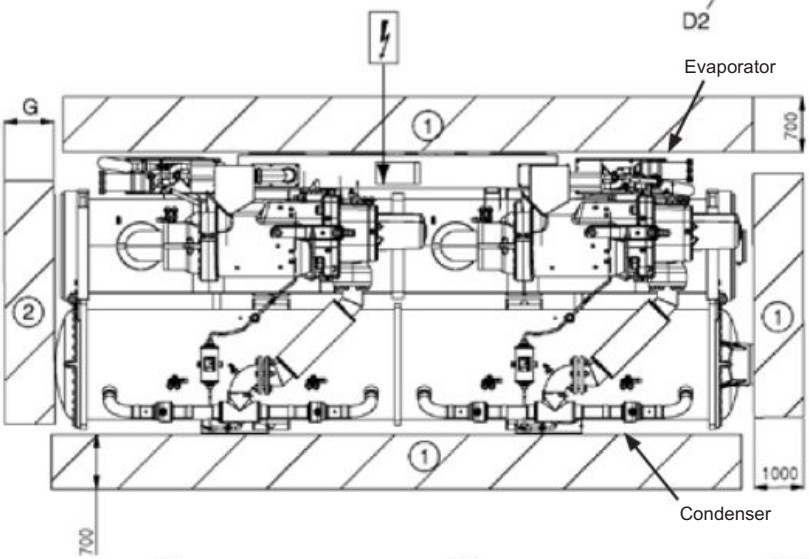

Units sizes	Dimensions in mm						
	A	B	C	D	E	F	G
LW ST standard units							
4408	1515	1568	1902	4790	219,1	219,1	4500
4608	1515	1568	1902	4790	219,1	219,1	4500
LW HE high efficiency units							
4228	1562	1591	2129	4832	273	273	4600
4628	1562	1591	2129	4832	273	273	4600
LW ST with high condensing option							
4408	1535	1568	1947	4790	219	219	4500
4608	1535	1568	1947	4790	219	219	4500
LW HE with high condensing option							
4228	1585	1591	2174	4832	273,1	273,1	4600
4628	1585	1591	2174	4832	273,1	273,1	4600

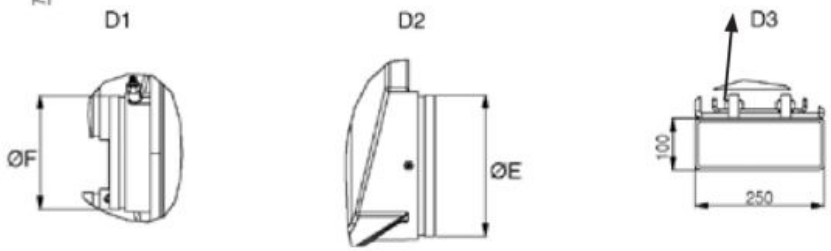

Key:
All dimensions are in mm.

1 Required clearance for maintenance
2 Recommended clearance for tube removal
Water inlet
Water outlet
Electrical cabinet

NOTE: Drawings are not contractually binding. Before designing an installation, consult the certified dimensional drawings, available on request.

HYDROCIAT TURBO LWT

Water chillers
Heat pump

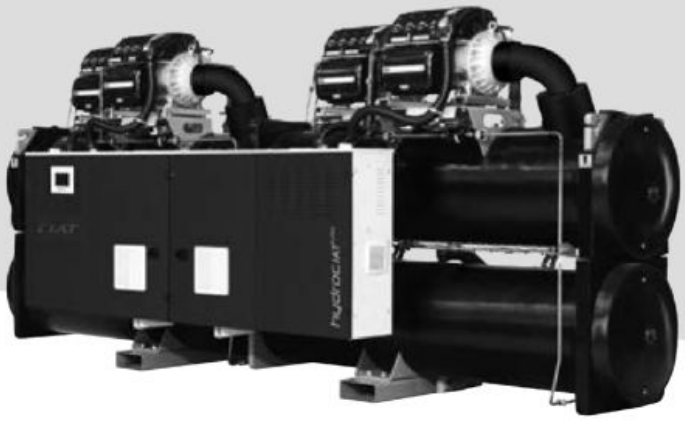

Energy excellence

Compact and reliable
Twin-turbine centrifugal compressors
Oil-Free compressors
Flooded shell and tubes evaporator
Self-adjusting electronic control
Touch screen control interface

Cooling capacity 550-1600 kW
Heating capacity 650-1875 kW

Cooling **Heating** **Heat recovery**

Use

The latest generation of **HYDROCIAT TURBO LWT** water chillers and water-to-water heat pumps are the perfect solution for all heating and cooling applications in the Office, Healthcare, Industry, Administration, Shopping centers, data centers and Collective Housing markets.

HYDROCIAT TURBO LWT is optimised to use ozone-friendly HFC R134a refrigerant.

This range guarantees compliance with the most demanding requirements for high energy efficiency and CO_2 reduction to comply with the various applicable European directives and regulations.

When producing chilled water, these units can be connected to a drycooler or a water cooling tower.

With the heat pump option, the units can produce hot water for heating applications. They can also be used in cooling mode by reversing the cycle on the hydronic circuits using a set of valves (hydraulic valves not supplied).

2

Range

HYDROCIAT TURBO LWT, series

Very High Efficiency cooling or heating version

The product is optimised to meet the most demanding technical and economic requirements.

The product is optimised for very high energy efficiency applications for which optimum seasonnal performance SEER values are required, ensuring operating costs are kept to a minimum.

Description

HYDROCIAT^{TURBO} units are packaged machines supplied as standard with the following components:
- Maglev centrifugal semi-hermetic compressors
- No oil
- Shell and tube type chilled-water evaporator
- Shell and tube type hot water condenser
- Electrical power and remote control cabinet:
  - 400 V-3ph-50 Hz general power supply (+/-10%) + Earth
  - transformer fitted as standard on the machine for supplying the remote control circuit with 24 V
- Connect Touch electronic control module
- Casing for indoor installation

The entire HYDROCIAT^{TURBO} range complies with the following EC directives and standards:
- Machinery Directive 2006/42/EC
- Electromagnetic Compatibility Directive 2014/30/EU
- EMC immunity and emissions EN 61800-3 'C2'
- Low Voltage Directive 2014/35/EU
- RoHS 2011/65/EU
- Pressure Equipment Directive (PED) 2014/68/EU
- Machinery Directive EN 60-204 -1
- Refrigeration systems and heat pumps EN 378-2.
- Regulation (EU) 2016/2281 implementing Directive 2009/125/EC with regard to ecodesign requirements

Description

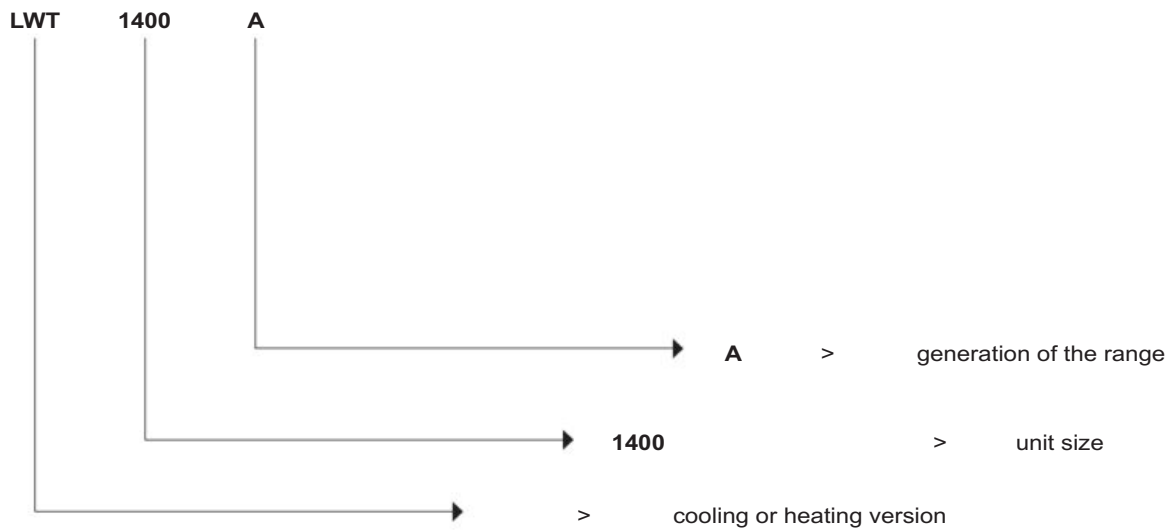

DESCRIPTION OF THE COMPONENTS

Twin-turbine centrifugal compressors,

- 2 Stages centrifugal compressors
- Optimized for R134a refrigerant
- Oil-free type
- Noiseless , vibration less via Magnetic levitation
- Compression ratio: from 1.5 to 5.0
- High efficiency permanent-magnet synchronous inverter motor.
- Linear step less capacity control via integrated inverter motor (up to 36000 rpm)
- Compressor equipped with Inlet Guide Valve at the turbine suction
- Compressor capacity control by successive use of speed variation swept volume variation at the turbine
- Integrated Soft- Start system (starting current limited to 5A)
- High Power Factor motor (cosφ > 0.9 for main operating conditions)
- Motor and electronic power section cooled by refrigerant
- Full electronic protection of motor against thermal and electrical overload via Internal sensors
- Rotation direction, no phase, under voltage, over voltage and power failure control
- Sensor on refrigerant suction and discharge for temperature monitoring
- Degree of protection: IP54

Shell and tube evaporator

- High performance glandless technology
- Copper tube bundle with internal and external grooves
- 19 mm thermal insulation
- Victaulic type coupling
- Maximum pressure, water side, of 10 bar.

Shell and tube condenser

- Copper tube bundle with internal and external grooves
- 19 mm thermal insulation (option)
- Built-in oil separator
- Victaulic type coupling
- Maximum pressure, water side, of 10 bar.

Refrigerant accessories

- Dehumidifier filters with rechargeable cartridges
- Hygroscopic sight glasses
- Electronic expansion valves
- Check-valve to prevent fluid recirculation in the compressor during transition phase

Regulation and safety instruments

- High and low pressure sensors
- Safety relief valves on refrigerating circuit
- High pressure switch on each compressor
- Evaporator antifreeze protection sensor
- Chilled water and hot water control sensors
- Electronic evaporator water circulation controller

Electrical cabinet

- Electrical cabinet index of protection IP23
- Safety disconnect switch
- 24 V control circuit
- Remote control transformer circuit
- Protection of the power and control circuits
- Connect Touch microprocessor-controlled electronic control module
- Electrical cabinet wire numbers
- Location of main components
- EMC filters and line reactors
- Door contact protection

Connect Touch control module

- User interface with 7 inch touchscreen
- Intuitive, user-friendly navigation using icons
- Clear information display in 10 languages
- (English, Spanish, French, German, Dutch, Turkish, Italian, Portuguese, Russian +1 Free)

The electronic control module performs the following main functions:

- regulation of the chilled water temperature (at the return or at the outlet)
- regulation of the water temperature based on the outdoor temperature (water law)
- regulation for low temperature energy storage
- second setpoint management
- complete management of compressors with start-up sequence, timer and operating time balancing
- self-regulating and proactive functions with adjustment of settings on drift control
- continuous power control slide system on the compressors according to the thermal requirements
- management of compressor short cycle protection
- phase reversal protection
- management of occupied/unoccupied modes (according to the time schedule)
- equalisation of compressor operating hours
- condensing temperature limitation (option)
- -diagnosis of fault and operating statuses
- management of a fault memory allowing a log of the last 50 incidents to be accessed, with operating readings taken when the fault occurs
- -blackbox memory
- master/slave management of two machines with equalisation of operating hours and automatic switching in case of a machine fault
- weekly and hourly time schedule for the machine, including 16 periods of absence
- display of all machine parameters (3 access levels, User/ Maintenance/Factory, password-protected): temperature, setpoints, pressures, flow rate, operation time.
- display of trend curves for the main values
- storage of maintenance manual, wiring diagram and spare parts list.

Unit construction

- Electrical cabinet in graphite grey (RAL 7024)

263

Description of the components

Remote management

Connect Touch is equipped as standard with an ETHERNET (IP) connection, offering a range of options for remote management, monitoring and diagnostics.
Using the integrated Webserver, a simple internet connection uses the unit's IP address to access the Connect Touch interface on the PC, facilitating everyday management tasks and maintenance operations.
Numerous communication protocols are available: MODBUS/JBUS TC/IP as standard, BACNET IP optional, enabling integration with most CMS/BMS
Several contacts are available as standard, enabling the machine to be controlled remotely by wired link:
- automatic operation control: when this contact is open, the machine stops
- setpoint 1/setpoint 2 selector: when this contact is closed, a second cooling setpoint is activated (energy storage or unoccupied mode, for example)
- heating/cooling operating mode selection
- fault reporting: this contact indicates the presence of a major fault which has caused one or both refrigerating circuits to stop
- operational status reporting indicates that the unit is in production mode
- Condenser flow switch
- setpoint adjustable via 4-20 mA signal: this input is used to adjust the active setpoint.
- power limitation adjustable by 4-20 mA signal
- power indication: analogue output (0-10 V) providing an indication of the unit's load rate.
- user fault reporting enables integration of a fault in the water loop
- general fault reporting: this contact indicates that the unit has stopped completely
- User interlock (open=unit shuts down / closed = enable to operate)
- alert reporting: this contact indicates the presence of a minor fault which has not caused the circuit affected to stop.
- end of storage signal: enables return to the second setpoint at the end of the storage cycle
- schedule override: closing this contact cancels the time schedule.
- Evaporator pump control (control by 0-10V command)

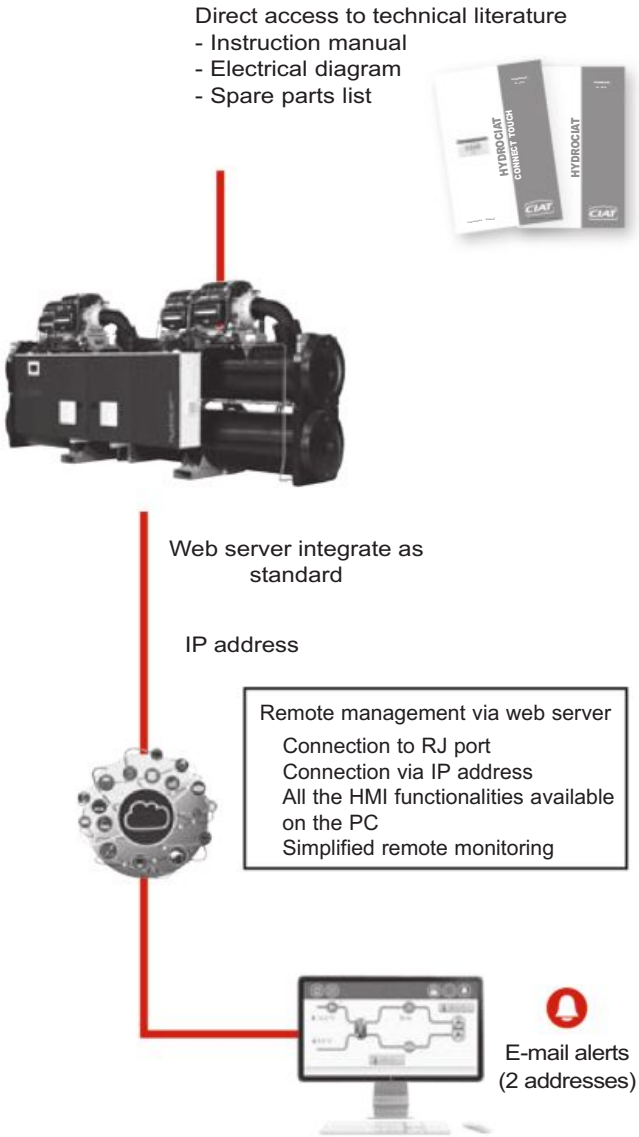

Maintenance alert as standard

Connect Touch has two maintenance reminder functions as standard, making users aware of the need to regularly perform maintenance operations and to guarantee the service life and performance of the unit. These two functions can be activated independently.
A reminder message appears on the unit's HMI screen, and stays there until it is acknowledged by the maintenance operator. The information and alert relating to these functions are available on the communication bus to be used on the CMS/BMS.

- the scheduled maintenance reminder: when activated, this function enables the period between two maintenance inspections to be set. This period may be set by the operator in either days, months or operating hours, depending on the application.
- the compulsory F-GAS sealing test maintenance reminder: when activated, this function, which is the default factory setting, enables the period between two sealing tests to be selected, according to the refrigerant charge, in compliance with the F-GAS regulations.

OPTIONS

Options	Description	Advantages	HYDROCIAT TURBO LWT
Master/slave operation	Unit equipped with supplementary water outlet temperature sensor kit (to be field installed) allowing master/slave operation of two units connected in parallel	Optimised operation of two units connected in parrallel operation with operating time equalisation	•
Single power connection point	Unit power connection via one main supply connection	Quick and easy installation	2300/4200
Evap. single pump power/control circuit	Unit equipped with an electrical power and control circuit for one pump evaporator side	Quick and easy installation: the control of fixed speed pumps is embedded in the unit control	1400/3100
Cond. single pump power/control circuit	Unit equipped with an electrical power and control circuit for one pump condenser side	Quick and easy installation: the control of fixed speed pumps is embedded in the unit control	1400/3100
Condenser insulation	Thermal condenser insulation	Minimizes thermal dispersions condenser side (key option for heat pump or heat recovery applications)	•
Service valve set	Liquid line valve (evaporator inlet) and compressor suction line valve	Allow isolation of various refrigerant circuit components for simplified service and maintenance	•
Evaporator with one pass less	Evaporator with one pass on the water side. Evaporator inlet and outlet on opposite sides.	Easy to install, depending on site. Reduced pressure drops	•
Condenser with one pass less	Condenser with one pass on the water side. Condenser inlet and outlet on opposite sides.	Easy to install, depending on site. Reduced pressure drops	•
Reversed evaporator water connections	Evaporator with reversed water inlet/outlet	Easy installation on sites with specific requirements	•
Reversed condenser water connections	Condenser with reversed water inlet/outlet	Easy installation on sites with specific requirements	•
Bacnet over IP	Bi-directional high-speed communication using BACnet protocol over Ethernet network (IP)	Easy and high-speed connection by ethernet line to a building management system. Allows access to multiple unit parameters	•
Control for low cond. temperature	Output signal (0-10 V) to control the condenser water inlet valve	Simple installation: for applications with cold water at condenser inlet (ex. ground-source, groundwater-source, superficial water-source applications) the signal permits to control a 2 or 3-way valve to maintain condenser water temperature (and so condensing pressure) at acceptable values	•
Specific dry cooler control	Control box for communication with the drycooler via a bus. For OPERA drycooler need to select the cabinet with option control cabinet manage by the chiller Connect'Touch control	Permits the use of an energy-efficient plug-and-play system	•
Input contact for Refrigerant leak detection	0-10 V signal to report any refrigerant leakage in the unit directly on the controlller (the leak detector itself must be supplied by the customer)	Immediate customer notification of refrigerant losses to the atmosphere, allowing timely corrective actions	•
Compliance with Swiss regulations	Additional tests on the water heat exchangers: supply (additional of PED documents) supplementary certificates and test certifications	Conformance with Swiss regulations	•
Compliance with Russian regulations	EAC certification	Conformance with Russian regulations	•
Flanged evaporator water connection kit	Victaulic piping connections with flanged joints	Easy installation	•
Flanged condenser water connection kit	Victaulic piping connections with flanged joints	Easy installation	•
230V electrical plug	230V AC power supply source provided with plug socket and transformer (180 VA, 0,8 Amps)	Permits connection of a laptop or an electrical device during unit commissioning or servicing	•
M2M supervision (accessory)	Monitoring solution which allows customers to track and monitor their equipment remotely in real time	Real-time expert technical support to improve equipment availability and reports at customer hand to monitor and optimize operating equipment.	•
Anti-vibration mounts (kit)	Elastomer antivibratils mounts to be place under the unit (Material classified B2 fire class according to DIN 4102).	Isolate unit from the building, avoid transmission of vibration and associate noise to the buiding. Must be associate with flexible connection on water side	•
Exchangers flexibles connection (kit)	Flexibles connections on the exchanger water side	Easy installation. Limit transmission of vibrations on the water network	•
Free Cooling dry cooler management	Control & connections to a Free Cooling Drycooler Opera or Vextra fitted with option FC control box	Easy system managment, Extended control capabilities to a drycooler used in Free Cooling mode	•
Heat Pump application	Unit configurated for Heat Pump application, include thermal condenser insulation	Optimisation on heating mode & minimize thermal dispersions condenser side	•

• ALL MODELS

Refer to the selection tool to find out which options are not compatible

STANDARD UNIT TECHNICAL CHARACTERISTICS

LWT				1400	1900	2100	2300	2600	3100	3400	3800	4200
Heating												
Standard unit Full load performances*	HW1	Nominal capacity	kW	649	844	939	1050	1198	1389	1538	1700	1875
		COP	kW/kW	6,13	6,26	5,93	5,79	5,89	5,76	5,97	5,89	5,67
	HW2	Nominal capacity	kW	629	817	915	1039	1186	1351	1491	1648	1820
		COP	kW/kW	4,89	4,81	4,63	4,68	4,68	4,53	4,72	4,62	4,50
Standard unit Seasonal energy efficiency**	HW1	$SCOP_{30/35°C}$	kW/kW	7,43	7,42	7,35	7,30	7,23	6,82	6,90	6,47	6,54
		ηs heat $_{30/35°C}$	%	289	289	286	284	281	265	268	251	254
		P_{rated}	kW	763	993	1103	1235	1409	1634	1809	2001	2203
Cooling												
Standard unit Full load performances*	CW1	Nominal capacity	kW	550	717	791	880	1007	1167	1302	1442	1578
		EER net	kW/kW	5,39	5,53	5,18	5,02	5,15	5,13	5,38	5,42	5,13
		Eurovent class		A	A	A	B	A	A	A	A	A
		EER gross***		5,55	5,70	5,32	5,14	5,30	5,33	5,63	5,69	5,39
	CW2	Nominal capacity	kW	631	823	917	1014	1134	1348	1441	1638	1794
		EER net	kW/kW	8,00	8,43	7,79	7,61	7,86	7,80	8,04	8,11	7,49
		Eurovent class		A	A	A	A	A	A	A	A	A
		EER gross***		8,41	8,88	8,19	7,94	8,25	8,37	8,68	8,78	8,17
Standard unit Seasonal energy efficiency**		**SEER $_{12/7°c}$ Comfort low temp.**	**kW/kW**	**9,70**	**9,55**	**9,54**	**9,79**	**9,59**	**9,49**	**9,50**	**9,48**	**9,14**
		ηs cool $_{12/7°C}$	**%**	**385**	**379**	**379**	**389**	**381**	**377**	**377**	**376**	**363**
		SEPR $_{12/7°c}$ Process high temp.	**kWh/kWh**	**9,48**	**10,31**	**9,78**	**9,05**	**9,26**	**9,44**	**9,49**	**9,75**	**9,32**
		ESEER	kW/kW	8,55	8,47	8,40	8,70	8,21	8,15	8,00	8,04	7,93
		ESEER gross***	kW/kW	9,74	9,62	9,48	9,79	8,96	9,66	9,51	9,74	9,77
Sound levels												
standard unit												
Sound power(1)			dB(A)	89	92	94	92	94	95	94	95	97
Sound pressure at 10 m(2)			dB(A)	57	60	62	60	62	63	62	63	65
Dimensions												
Standard unit												
Length			mm	3140	3160	3360	4345	4345	4345	4800	4800	4800
Width			mm	1270	1310	1335	1385	1385	1385	1385	1390	1410
Height			mm	1780	1880	1965	2036	2036	2036	2000	2050	2100
Operating weight(3)												
Standard unit			kg	2402	2930	3376	4831	4855	4904	5504	6164	6730
Compressors				Turbocor TT300 / TT350								
Circuit A				2	2	2	1	1	1	2	2	2
Circuit B				-	-	-	2	2	2	2	2	2

*	In accordance with standard EN14511-3:2013.
**	In accordance with standard EN14825:2016, average climate
***	Values not Eurovent certified. Calculation without the impact of the exchanger pressure drop.
HW1	Heating mode conditions: Evaporator entering/leaving water temperature 10°C/7°C, condenser entering/leaving water temperature 30°C/35°C, evaporator and condenser fouling factor 0 m^2. k/W
HW2	Heating mode conditions: Evaporator entering/leaving water temperature 10°C/7°C, condenser entering/leaving water temperature 40°C/45°C, evaporator and condenser fouling factor 0 m^2. k/W
CW1	Cooling mode conditions: Evaporator water entering/leaving temperature 12°C/7°C, condenser entering/leaving water temperature 30°C/35°C, evaporator and condenser fouling factor 0 m^2.K/W
CW2	Cooling mode conditions: Evaporator water entering/leaving temperature 23°C/18°C, condenser entering/leaving water temperature 30°C/35°C, evaporator and condenser fouling factor 0 m^2.K/W
ηs cool $_{12/7°C}$ & SEER $_{12/7°C}$	**Bold values compliant to Ecodesign regulation: (EU) No 2016/2281 for Comfort application**
SEPR $_{12/7°C}$	**Bold values compliant to Ecodesign regulation: (EU) No 2016/2281 for Process application**
(1)	in dB ref=10^{-12} W, 'A' weighted. Declared dual-number noise emission values in accordance with ISO 4871 with an associated uncertainty of +/-3dB(A). Measured in accordance with ISO 9614-1 and certified by Eurovent.
(2)	In dB ref 20µPa, 'A' weighted. Declared dual-number noise emission values in accordance with ISO 4871 with an associated uncertainty of +/-3dB(A). For information, calculated from the sound power Lw(A).
(3)	Values are guidelines only. Refer to the unit name plate.

EUROVENT CERTIFIED PERFORMANCE
www.eurovent-certification.com

Eurovent certified values

STANDARD UNIT TECHNICAL CHARACTERISTICS

LWT		1400	1900	2100	2300	2600	3100	3400	3800	4200
Refrigerant(3)		R-134a								
Circuit A	kg	95,0	120,0	140,0	100,0	100,0	100,0	125,0	135,0	150,0
	teqCO_2	135,9	171,6	200,2	143,0	143,0	143,0	178,8	193,1	214,5
Circuit B	kg	-	-	-	125,0	125,0	125,0	125,0	135,0	150,0
	teqCO_2	-	-	-	178,8	178,8	178,8	178,8	193,1	214,5
Capacity control		Connect'Touch, electronic expansion valves (EXV)								
Minimum capacity	%	15	10	10	10	10	10	10	10	10
Evaporator		Flooded multi-pipe type								
Water volume	l	115	165	180	285	285	285	330	330	365
Water connections (Victaulic)	in	6	6	8	8	8	8	8	8	8
Drain and vent connections (NPT)	in	3/8	3/8	3/8	3/8	3/8	3/8	3/8	3/8	3/8
Max. water-side operating pressure	kPa	1000	1000	1000	1000	1000	1000	1000	1000	1000
Condenser		Flooded multi-pipe type								
Water volume	l	145	157	187	308	308	308	339	487	487
Water connections (Victaulic)	in	6	6	8	8	8	8	8	8	8
Drain and vent connections (NPT)	in	3/8	3/8	3/8	3/8	3/8	3/8	3/8	3/8	3/8
Max. water-side operating pressure	kPa	1000	1000	1000	1000	1000	1000	1000	1000	1000

(3) Values are guidelines only. Refer to the unit name plate.

267

Electrical data notes for standard units

LWT		1400	1900	2100	2300	2600	3100	3400	3800	4200
Power circuit supply										
Nominal voltage	V-ph-Hz	400-3-50								
Voltage range	V	360-440								
Control circuit supply		24 V via the built-in transformer								
Maximum operating input power(1)- Standard unit										
Circuit 1(a)	kW	140	201	230	76	116	111	133	187	222
Circuit 2(a)	kW	-	-	-	152	152	222	204	187	222
Single power connection point option	kW	-	-	-	229	269	333	337	375	445
Nominal operating current draw(2)- Standard unit										
Circuit 1(a)	A	162	208	244	93	129	119	151	210	243
Circuit 2(a)	A	-	-	-	185	187	237	229	210	243
Single power connection point option	A	-	-	-	278	315	356	380	420	486
Maximum operating current draw (Un)(1)- Standard unit										
Circuit 1(a)	A	220	315	361	119	183	174	209	294	349
Circuit 2(a)	A	-	-	-	239	239	349	319	294	349
Single power connection point option	A	-	-	-	358	422	523	528	588	697
Maximum current (Un-10%)(1)- Standard unit										
Circuit 1(a)	A	237	340	390	129	197	188	225	318	377
Circuit 2(a)	A	-	-	-	258	258	377	345	318	377
Single power connection point option	A	-	-	-	387	456	565	570	635	753
Maximum start-up current(Un) - Standard unit(3)		Lower than max current								
Dissipated power of electrical equipment(1)	W	782	1249	1249	1144	1347	1814	1884	2351	2351
Short-circuit whistand current (TN system)										
Circuit A+B	KA	50	50	50	50	50	50	50	50	50

(1) Values obtained at unit continuous maximum operating conditions (data given on the unit nameplate)
(2) Standardised EUROVENT conditions, water-cooled exchanger water inlet/outlet = 12°C/7°C, condenser entering/leaving water temperature = 30°C/35°C
(3) Start-up current is limited by the soft-start controller included in the compressor.
(a) When the machines are equipped with two power supplies, circuit 1 supplies the refrigerant circuit A and circuit 2 supplies the refrigerant circuit B

Note: Evap. single pump power/control circuit and Cond. single pump power/control circuit options are not included in these values.

LWT		1400	1900	2100	2300	2600	3100	3400	3800	4200
Short-circuit whistand current (TN system)										
Circuit A+B	KA	50	50	50	50	50	50	50	50	50

(1) If another current limitation protection device is used, its time-current and thermal constraint (I^2t) trip characteristics must be at least equivalent to those of the recommended protection.

Note: The short-circuit stability current values above are suitable with the TN system.

268

ELECTRICAL DATA NOTES FOR STANDARD UNITS

Electrical data notes and operating conditions, HydrociatTurbo LWT units

- **As standard:**
  HYDROCIAT^{Turbo} LWT 1400 to HYDROCIATTurbo LWT2100 units have a single power connection point located immediately upstream of the main supply disconnect switche.
  HYDROCIAT^{Turbo} LW 2300 to HYDROCIATTurbo LWT4200 units have two connection points located immediately upstream of the main supply disconnect switches.
- **Control box includes the following standard features:**
  - Two disconnect switches per circuit: One main supply disconnect switch and one disconnect switch for the supply of the control part, the undervoltage protection circuit and the motor mechanism module,
  - Filtering compressor currrent devices
  - Anti-short cycle protection devices
  - Control devices supply by internal transformers.
- **Field connections:**
  All connections to the system and the electrical installations must be in accordance with all applicable codes.*
- HYDROCIAT^{Turbo} LWT units are designed and built to ensure conformance with these codes. The recommendations of European standard EN 60204-1 (corresponds to IEC 60204-1) (machine safety - electrical machine components - part 1:general regulations) are specifically taken into account, when designing the electrical equipment.
- Generally the recommendations of IEC 60364 are accepted as compliance with the requirements of the installation regulation.
- Annex B of standard EN 60204-1 specifies the electrical features used for the operation of the units. The features below complete the informations given in this document:

1. Physical environment:

The classification of environment is specified in standard EN 60364:
- Indoor installation**,
- Ambient temperature range: minimum temperature +5°C to +42°C, class AA4
- Altitude: AC1 of 2000 m or less,
- Presence of water: Class AD2 (possibility of water droplets)**
- Presence of hard solid: Class AE2 (no significant dust present)**,
- Presence of corrosive and polluting substances, class AF1 (negligible),
- Competence of persons: BA4 (Persons wise),
- Overvoltage category: II (2,5KV).

2. Compatibility for low-frequency conducted disturbances according to class 2 levels per IEC61000-2-4 standard:
   - Power supply frequency variation: +- 2Hz
   - Phase imbalance : 2%
3. The neutral (N) line must not be connected directly to the unit (if necessary use a transformer).
4. Overcurrent protection of the power supply conductors is not provided with the unit.
5. The factory-installed disconnect switch(es)/circuit breaker(s) are of a type suitable for power interruption in accordance with EN 60947-3 (corresponds to IEC 60947-3).
6. The units are designed for connection to TN networks (IEC 60364).
   In IT networks,if noise filters are integrated into the compressor(s) variable frequency drive(s), this will render the units unsuitable for their intended purpose. In addition, the equipment characteristics in case of insulation failure are modified.
   For IT networks, the earth connection must not be at the network earth. Provide a local earth; consult competent local organisations to complete the electrical installation.
7. Electromagnetic environment: classification of the electromagnetic environment is described in standard EN 61800-3 (corresponds to IEC 61800-3):
   - Immunity to external interference defined by the second environment***
   - Interference emission as defined in category C2

Warning: In a residential environment, this product may cause radio interference in which case additional mitigation measures could be required.

The compressor variable frequency drive is a source of perturbations from the harmonic currents. An investigation could be necessary to check that the perturbations don't exceed the compatibility limits with the other devices connected on the same power supply network. In an electrical installation, the levels of compatibility to be observed at the internal coupling point (IPC) to which other loads are connected are described in standard IEC 61000-2-4.

- Leakage currents: If protection by monitoring the leakage currents is necessary to ensure the safety of the installation, the presence of additional leakage currents introduced by the use of variable frequency drive(s) in the compressor must be considered.
  In particular, the reinforced immunity protection types and a control value not lower than 150 mA are recommended when selecting differential protective devices.

NOTE: If particular aspects of an actual installation do not conform to the conditions described above, or if there are other conditions which should be considered, always contact your local Carrier representative.

* Generally, the recommendations of the standard of International Electrotechnical Commission (IEC60364) are identified to meet the requirements of the installation guidelines.

** The required protection level for this class is IP21B or IPX1B (according to reference document IEC 60529). All HYDROCIAT^{Turbo} LWT units are IP23 and fulfil this protection condition.

*** Example of second environnement installations: Industrial areas, technical facilities supplied by a dedicated transformer

269

Dimensions

■ LWT 1400-2100

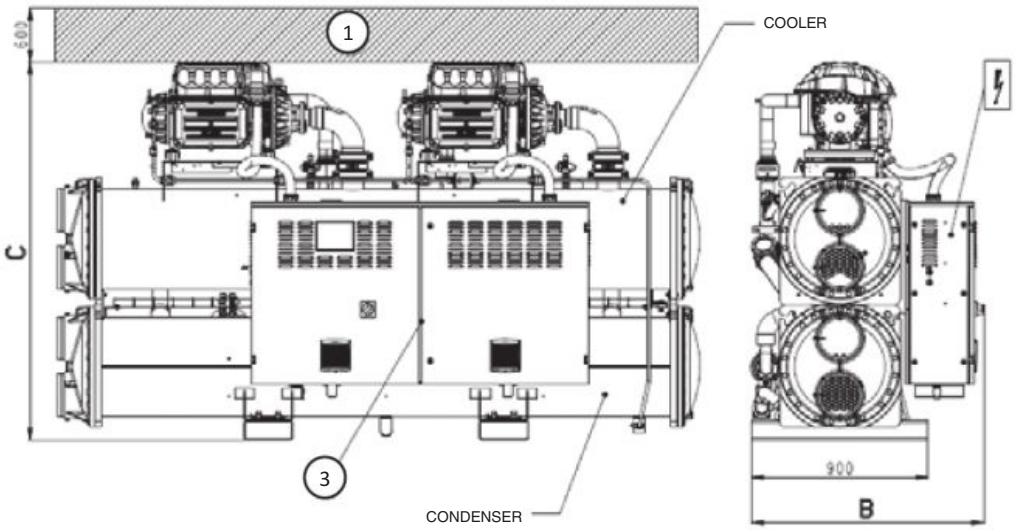

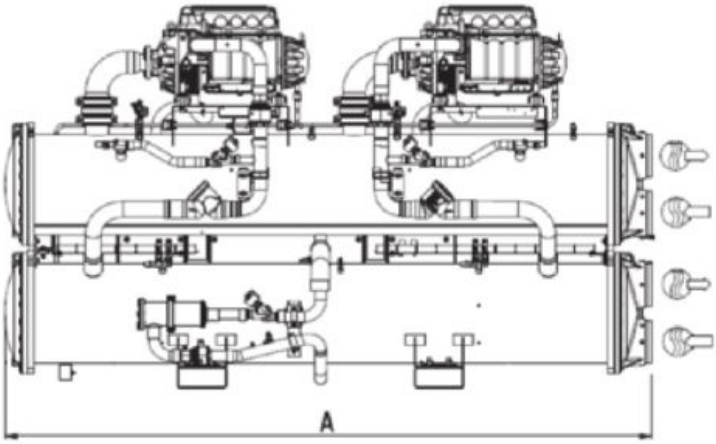

Units sizes	Dimensions in mm			
	A	B	C	D
LWT				
1400	3045	1120	1745	2800
1900	3070	1155	1846	2800
2100	3270	1190	1925	3000

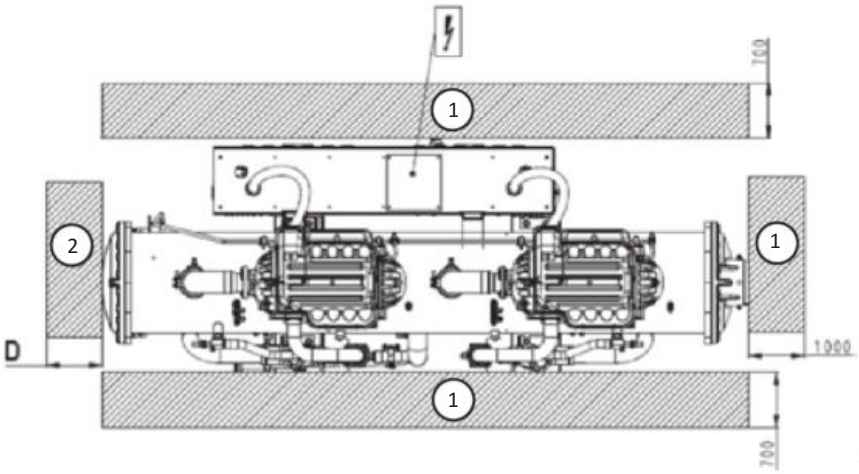

Key:
All dimensions are in mm.

(1) Required clearance for maintenance
(2) Recommended clearance for tube removal
Water inlet
Water outlet
Electrical cabinet

NOTE: Drawings are not contractually binding. Before designing an installation, consult the certified dimensional drawings, available on request.

Dimensions

LWT 2300-3100

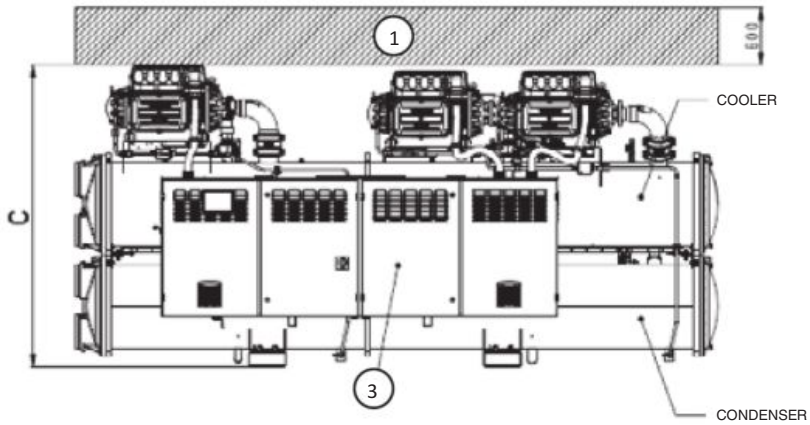

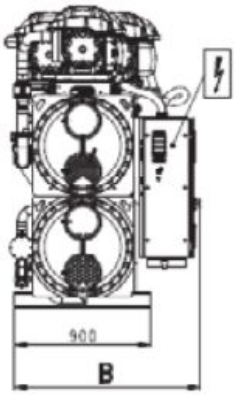

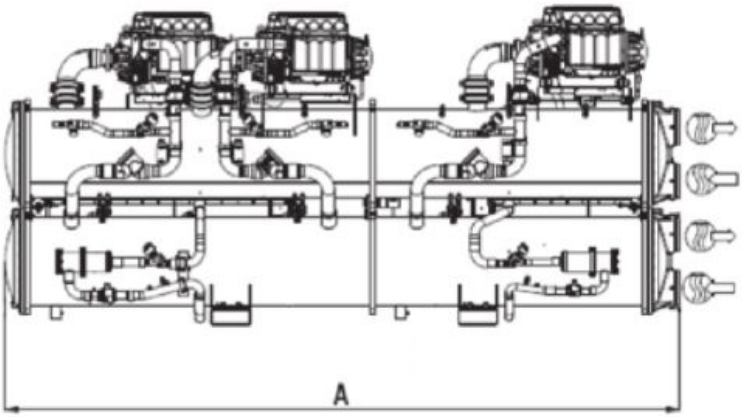

Units sizes	Dimensions in mm			
	A	B	C	D
LWT				
2300	4257	1290	1955	3950
2600	4257	1290	1955	3950
3100	4257	1290	1955	3950

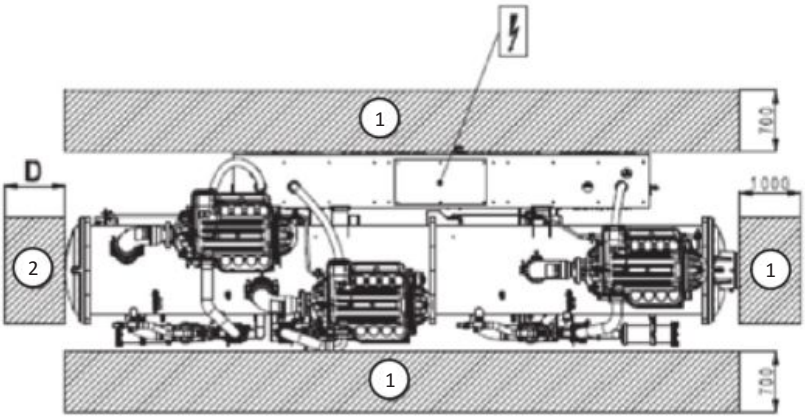

Key:

All dimensions are in mm.

1 Required clearance for maintenance

2 Recommended clearance for tube removal

Water inlet

Water outlet

Electrical cabinet

NOTE: Drawings are not contractually binding. Before designing an installation, consult the certified dimensional drawings, available on request.

Dimensions

LWT 3400-4200

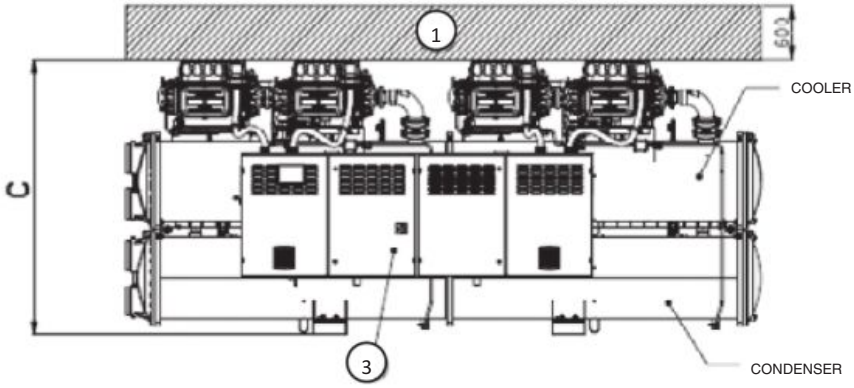

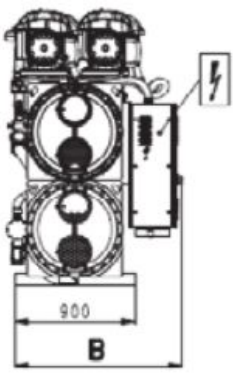

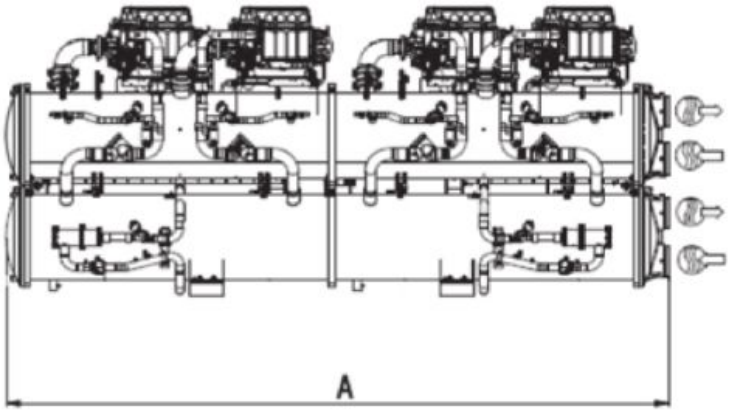

Units sizes	Dimensions in mm			
	A	B	C	D
LWT				
3400	4705	1290	1955	4400
3800	4740	1290	2011	4400
4200	4740	1325	2065	4400

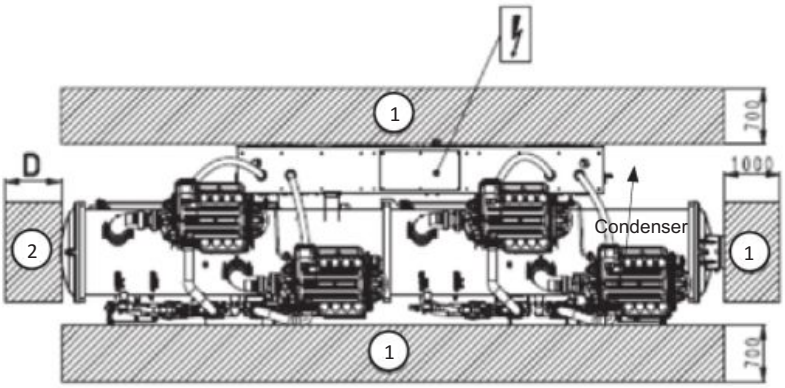

Key:

All dimensions are in mm.

1 Required clearance for maintenance

2 Recommended clearance for tube removal

Water inlet

Water outlet

Electrical cabinet

NOTE: Drawings are not contractually binding. Before designing an installation, consult the certified dimensional drawings, available on request.

CIAT

DRYCOOLERS - CONDENSERS
HEAT EXCHANGERS - THERMAL ENERGY STORAGE

DRYCOOLERS - CONDENSERS

OPERA P.277
Up to 1 100kW

VEXTRA P.283
Up to 1 900kW

ENERGY OPTIMISATION SOLUTIONS P.287

AEROFRESH P.289

CONDENSING UNITS

CONDENCIAT CL 2 ..... P.291
6.8 to 18.6kW

CONDENCIAT CD..... P.295
40 to 161kW

HEAT EXCHANGERS

ITEX P.303

THERMAL ENERGY STORAGE

THERMAL ENERGY STORAGE P.309

Cooling Heating

OPERA

Drycoolers
Air-cooled condensers

MORE

- *More efficient*
- *More flexible*
- *More intelligent*

for LESS

- *Less energy*
- *Less time*
- *Less noise*

Capacity: up to 1100 kW

Free cooling

Use

The **OPERA** range, available in drycooler or air-cooled condenser versions, is particularly suited to tertiary, industrial and healthcare applications.

Drycoolers in the OPERA range are mainly designed for cooling water or glycol/water mix for:

- Condensers for water chillers,
- Generators,
- Free cooling,
- Processes and machines (presses, compressors, etc.)

Air-cooled condensers in the OPERA range are mainly designed for the condensation of refrigerants for water chillers, as a "split system".

These devices are designed to be installed outdoors.

Range

OPERA is a large modular range, which offers:

- 3 casing lengths (S, M or L module), allowing either the dimensions, the capacity or the power consumption to be optimised.
- A range of sizes, from 1 to 14 fans.
- 2 impeller diameters, 800 or 910 mm.
- Several rotation speeds, from 340 to 1270 rpm (AC motor).
- Several configurations: horizontal or vertical unit with forced or induced draught for high temperatures.

Various combinations of these elements, as well as the choice of a number of options, allow us to provide devices that are adapted to a range of applications and environments.

277

Description

Excellent resistance to corrosion

The casing boasts category C3 protection against corrosion, in line with ISO standard 12944-2 – RAL 7035 (light grey)

1 **Coil**
Copper tubing and manifolds, high-performance aluminium fins, resistant to fouling.
Anti-shear system for bundle tubing.
Piping for drycoolers: ISO PN16 02A type rotating flanges as per DIN 2642 in 304L stainless steel (1 or 2 inlets/outlets depending on flow rate).
Piping for condenser: copper (1 input/output per refrigerating circuit for units with 1 fan line, 2 inputs/outputs for units with 2 fan lines). Delivered pressurised with nitrogen.

2 **Fan motor assemblies**
Profiled collars in galvanised steel with RAL 7035 polyester powder paint or RAL 9005 composite depending on the motor reference.
Aluminium and polypropylene impeller.
Class F motor - IP54 - three-phase 400 V +/-10 % 50 Hz+/-2 % - Standard connection to the motor terminal boxes.
Black protective grille compliant with standard BS ISO 12499.
Individual partitioning.
The motors are also available in a 60 Hz version or in other voltages.

3 **Casing**
Galvanised steel with polyester powder paint. Assembly using stainless rivets and LANTHANUM nuts and bolts for the feet.

4 **Feet**
Galvanised steel with polyester powder paint.

5 **Protective enclosures on the elbows and manifolds**

Each device is tested:

- The tightness of the coil is subjected to an underwater airtightness test.
- For devices with the terminal box or electrical cabinet option: rotation tests, dielectric tests, current measurement.

The OPERA range complies with the following European directives:

- Machinery Directive 2006/42/EC,
- EMC Directive 2014/30/EU,
- Pressure Equipment Directive (PED) 2014/68/EU.

Designation (example)

OPERA DLN 9124-2 SHI 690A9A

- Motor (A=AC, E=EC,B=AC 60 HZ, M=1st EC stage)
- Rotation speed
- Draught (I=Induced, F=Forced)
- Position (H = Horizontal, V = Vertical)
- Coil type (S=Single, D=Double, T=Twin, Z=Drainable)
- Number of fan lines (1 or 2)
- Number of coil rows
- Number of fans
- Impeller diameter (8 = 800, 9 = 910 mm)
- Module size (S=Short, M=Medium, L=Long)
- D = Drycooler C = Condenser

Options for each application

	Options	Description/Advantages	DRYCOOLER	CONDENSER
Protection adapted for the environment	Pre-coated aluminium fins	Improves the resistance of the fins to corrosion. For low corrosion environments.	●	●
	High efficiency coating on the fins : ALUCOAT®507 - HERESITE (on request)	Improves the resistance of the fins to corrosion. For corrosive environments.	●	●
	Stainless steel tubing bundle	For corrosive fluids.	●	
	Corrosiveness resistance category C5M	Casing and fan motor assemblies for corrosive environments.	●	●
	ATEX II 2G/3G	For explosive atmospheres.	●	●
Quick, simple installation	Terminal box	Connection to the terminals of each motor on the front panel of unit.	●	●
	Protection cabinet	Protected by a thermal-magnetic circuit breaker on each motor.	●	
	Control cabinet	Motor and control protection, either by electronic board, depending on the temperature, or by the chiller if compatible.	●	●
	Maintenance switch	For stopping individual motors.	●	●
	Counter-flanges	In stainless steel, with gaskets, bolts and collar.	●	
	Raised feet	To ensure a good flow of air depending on how the units are installed: against a wall, side by side, etc.	●	●
	Blade protective screen	Protection against hail, impacts, etc. For forced draught, vertical units.	●	●
Installation surface constraints	Vertical position	For narrow terraces.	●	●
Optimised, secure transport	Stacking of 2 identical devices		●	●
	Skid for transport by container	Secure transport and easy loading/unloading.	●	●
Optimisation of electrical consumption and noise	EC motor (with electronic switching)	Variable speed control from 0 to 100% using a 0/10V signal.	●	●
High-temperature fluid application	Forced draught	Motors in the flow of fresh air.	●	
Generator application	Double circuit drycooler	Cooling of 2 water circuits (LT – HT) in series using air from just 1 unit.	●	
	Expansion tank	Max permissible pressure: 0.5 bar eff.	●	
Application for water without glycol	Drainable coil	Device located on a slope to prevent frost - drainage by gravity	●	
Free cooling application	Free cooling valve kit	Valves with motor, controlled by the control cabinet. Controlled according to the operation of the drycooler or chiller.	●	
Adiabatic cooling application	AEROFRESH (water misting into the air flow)	Size of the unit reduced by cooling of the ambient air. Operates completely safely due to the antibacterial treatment applied to the water.	●	●

Dimensions

Horizontal Position - Induced Draught

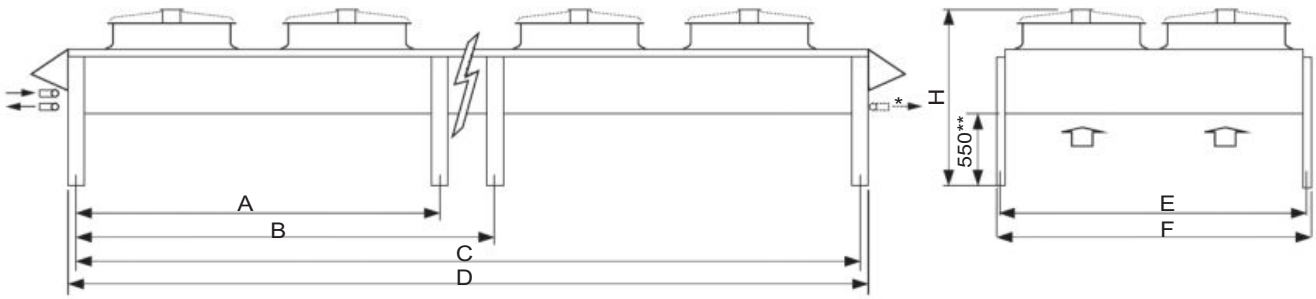

Unit shown has 2 fan lines - no. of motors between the feet is not contractually binding

* for units with input/output piping on the opposite side
** standard feet

Horizontal Position - Forced Draught

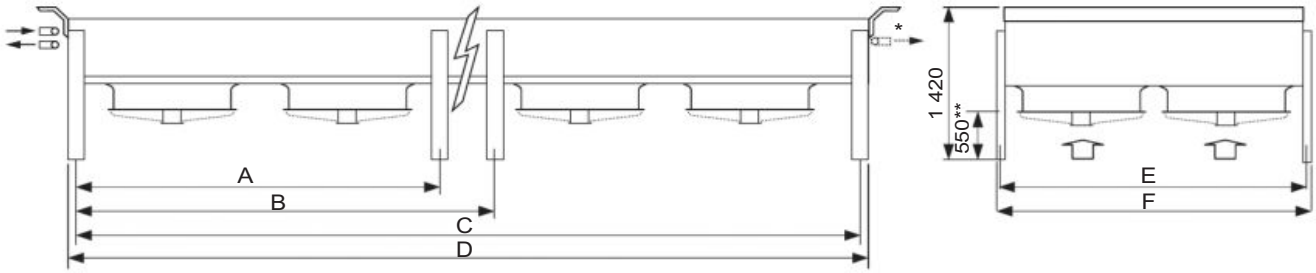

Unit shown has 2 fan lines - no. of motors between the feet is not contractually binding

* for units with input/output piping on the opposite side
** standard feet

	No. of motors	1	2	3	4	5	6	4	6	8	10	12	14
DSN S module	A	-	-	-	-	1840	1840	-	-	-	1840	1840	1840
	B	-	-	-	-	2790	3740	-	-	-	2790	3740	4690
	C	830	1780	2730	3680	4630	5580	1780	2730	3680	4630	5580	6530
	D	950	1900	2850	3800	4750	5700	1900	2850	3800	4750	5700	6650
	H	1390 max											
	Max empty weight without options +/-10% (kg)	233	369	503	666	809	928	638	875	1135	1393	1617	1874
DMN M module	A	-	-	-	3140	3140		-	-	3140	3140	4740	3140
	B	-	-	-	-	4740		-	-	-	4740	-	7940
	C	1480	3080	4680	6280	7880		3080	4680	6280	7880	9480	11080
	D	1600	3200	4800	6400	8000		3200	4800	6400	8000	9600	11200
	H	IMPELLER ø 800: 1390 max - IMPELLER ø 910: 1460 max											
	Max empty weight without options +/-10% (kg)	314	523	712	958	1183		918	1298	1645	2029	2388	2772
DLN L module	A	-	-	-	3740	3740		-	-	3740	3740	5640	
	B	-	-	-	-	5640		-	-	-	5640	-	
	C	1780	3680	5580	7480	9380		3680	5580	7480	9380	11280	
	D	1900	3800	5700	7600	9500		3800	5700	7600	9500	11400	
	H	IMPELLER ø 800: 1390 max - IMPELLER ø 910: 1460 max											
	Max empty weight without options +/-10% (kg)	352	599	846	1110	1373		1036	1474	1929	2384	2806	
All	E	1240						2360					
	F	1280						2400					

Dimensions in mm, excluding options.

Vertical position

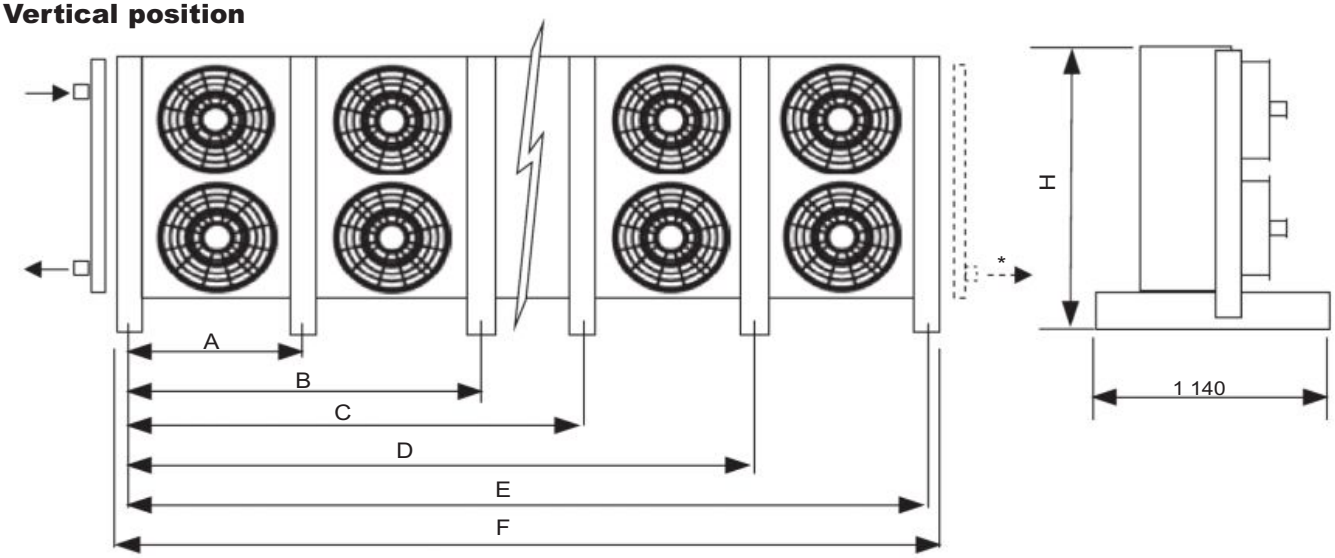

Unit shown has 2 fan lines - no. of motors between the feet is not contractually binding

* for units with input/output piping on the opposite side

	No. of motors	1	2	3	4	5	6	4	6	8	10	12	14
DSN/ CSN S module	A	-	-	-	1840	1840	1840	-	-	1840	1840	1840	1840
	B	-	-	-	-	2790	3740	-	-	-	2790	3740	4690
	C	-	-	-	-	-	-	-	-	-	-	-	-
	D	-	-	-	-	-	-	-	-	-	-	-	-
	E	830	1780	2730	3680	4630	5580	1780	2730	3680	4630	5580	6530
	F	950	1900	2850	3800	4750	5700	1900	2850	3800	4750	5700	6650
	Max empty weight without options +/-10% (kg)	282	419	554	705	915	1039	684	922	1181	1497	1727	1983
DMN/CMN M module	A	-	-	1540	1540	1540		-	1540	1540	1540	3140	3140
	B	-	-	3140	4740	3140		-	3140	4740	3140	6340	4740
	C	-	-	-	-	4740		-	-	-	4740	-	6340
	D	-	-	-	-	6340		-	-	-	6340	-	7940
	E	1480	3080	4680	6280	7880		3080	4680	6280	7880	9480	11080
	F	1600	3200	4800	6400	8000		3200	4800	6400	8000	9600	11200
	Max empty weight without options +/-10% (kg)	356	558	835	1046	1339		927	1383	1734	2187	2464	2920
DLN/CLN L module	A	-	-	1840	1840	1840		-	1840	1840	1840	3740	
	B	-	-	3740	5640	3740		-	3740	5640	3740	7540	
	C	-	-	-	-	5640		-	-	-	5640	-	
	D	-	-	-	-	7540		-	-	-	7540	-	
	E	1780	3680	5580	7480	9380		3680	5580	7480	9380	11280	
	F	1900	3800	5700	7600	9500		3800	5700	7600	9500	11400	
	Max empty weight without options +/-10% (kg)	399	639	972	1204	1537		1053	1572	1986	2501	2842	
All	H	1370						2490					

Dimensions in mm, excluding options.

INSTALLATION RECOMMENDATIONS

- These units are designed to operate outside. When starting up, frost and snow could adversely affect the operation of horizontal units.
  As a general measure, all steps should be taken to avoid the risk of air recycling. This is especially important when the installation comprises several units.
  It is not recommended to install units near the hot air extraction duct outlet or close to deciduous plants (this could cause fouling).
- **A horizontal unit** must have a surrounding clearance of 1.5 m. Where the use of anti-vibration mounts is required, use a rigid frame which locks the feet together.
- **A vertical unit** should preferably be placed parallel to the direction of the wind. It is not recommended for use with low fan rotation speeds. In addition, we recommend that these units be stabilised using braces connecting their two upper ends to fixed supports (wall or framework).
- If **speed regulators** other than those recommended by the manufacturer are used, check that these are compatible with the electric motors.
- For air-cooled condensers, the **calculation of the evacuation capacity** of the air-cooled condenser must be carried out in accordance with professional best practice and particularly in accordance with:
  - the type of compressor in the installation (hermetic, semi-hermetic or open),
  - the horizontal and vertical lengths of the connection pipes and their diameter.
- **Commissioning and maintenance:** refer to the instruction manual.
- These units **comply with the European directives.** The installer is responsible for ensuring the compliance of the installation. The installer must ensure safety and protective devices (emergency stop, shut-off valves, lightning protection, etc.) are put in place and are accessible.

282

VEXTRA
Drycoolers

Slim design and
acoustic comfort
Saves up to
40% floor space

Up to 1900 kW

Free cooling

Use

Drycoolers in this range are mainly designed for cooling water or glycol/water mix for:
- Condensers for water chillers,
- Free cooling,
- Processes and machines (presses, compressors etc.)
- Replacing water cooling towers etc.

These devices are designed to be installed outdoors.

Range

- More than 220 models.
- A range of sizes, from 6 to 20 fans.
- 2 impeller diameters, 800 or 910 mm.
- Several rotation speeds, from 340 to 1270 rpm (AC motor).

Various combinations of these elements, as well as the choice of a number of options, allow us to provide devices that are adapted to a range of applications and environments.

Description

Excellent resistance to corrosion
Casing with corrosiveness resistance category as per ISO 12944-2.

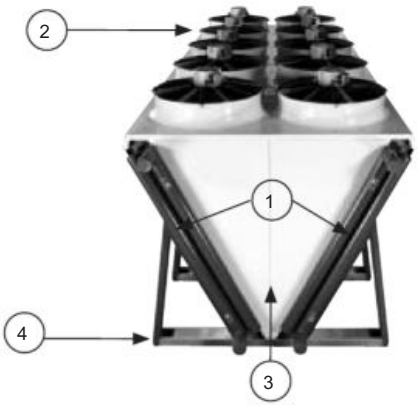

1 **2 Coils**
Copper tubes and high-performance aluminium fins, resistant to fouling.
Manifolds and piping: RAL 7024 graphite grey painted steel.

2 **Fan motor assemblies**
Profiled collars in galvanised steel with RAL7035 polyester powder paint or RAL9005 composite depending on the motor reference.
Aluminium + polypropylene propeller.
Class F motors - IP54 - TRI400V +/-10% 50Hz+/-2% - Standard connection to motor terminal boxes
Black protective grille compliant with standard BS ISO 12499.
Partitioning in pairs.
The motors are also available in a 60 Hz version or in other voltages.

3 **Casing**
Galvanised steel with polyester powder paint in RAL7035 light grey.

4 **Feet**
Galvanised steel with polyester powder paint in RAL7024 light graphite grey.

Each device is tested:
- The tightness of the coil is subjected to an underwater airtightness test.
- For devices with the terminal box or electrical cabinet option: rotation tests, dielectric tests, current measurement.

The entire range complies with the following European directives:
- Machinery directive 2006/42/EC,
- EMC directive 2014/30/EU,
- Pressure Equipment Directive (PED) 2014/68 EU.

3

Description

VEXTRA 1 16 4 UI 690 A 9A

- 9A: Impeller diameter (8 = 800 mm, 9 = 910 mm)
- A: Motor type
  - A: AC -3 ph 400 V 50 Hz
  - B: AC- other supply
  - E: EC
  - M: 1st stage with EC motor
- 690: Rotation speed
- 4: Number of rows
- 16: Number of fans

Options for each application

	Options	Description/advantages
Protection adapted for the environment	Pre-coated aluminium fins	Improves the resistance of the fins to corrosion. For low corrosion environments.
	High-efficiency coating on fins: ALUCOAT®507/HERESITE (on request)	Improves the resistance of the fins to corrosion. For relatively corrosive environments.
	Stainless steel tubing bundle	For corrosive fluids.
	Corrosiveness resistance category C5M	Casing and fan motor assemblies for corrosive environments.
	ATEX II 2G/3G	For explosive atmospheres.
Quick, simple installation	Terminal box	Connection to the terminals of each motor on the front panel of the device.
	Protection cabinet	Protected by a thermal-magnetic circuit breaker on each motor.
	Control cabinet	Motor and control protection, either by electronic board, depending on the temperature, or by the chiller if compatible.
	Flanges	NFE 1092-1 type 01A PN16 steel
	Counter-flanges	In steel, with gaskets and bolts.
	Blade protective screen	Impact protection
Optimisation of electrical consumption and noise	EC (electrically commutated) motor	Variable speed control from 0 to 100% using a 0/10V signal.
Application for water without glycol	Drainable coil	Device located on a slope to prevent frost - drainage by gravity
Free cooling application	Free cooling valve kit	Valves with motors controlled by the control cabinet. Controlled according to the operation of the drycooler or water chiller.
Adiabatic cooling application	AEROFRESH (water misting into the air flow)	Water misting into the ambient air allows the size of the device to be reduced or the cooling tower to be replaced. Operates completely safely due to the antibacterial treatment applied to the water.
Secure transport	Skid for transport by container	Secure transport and easy loading/unloading. option on request - availability depends on the models

Dimensions

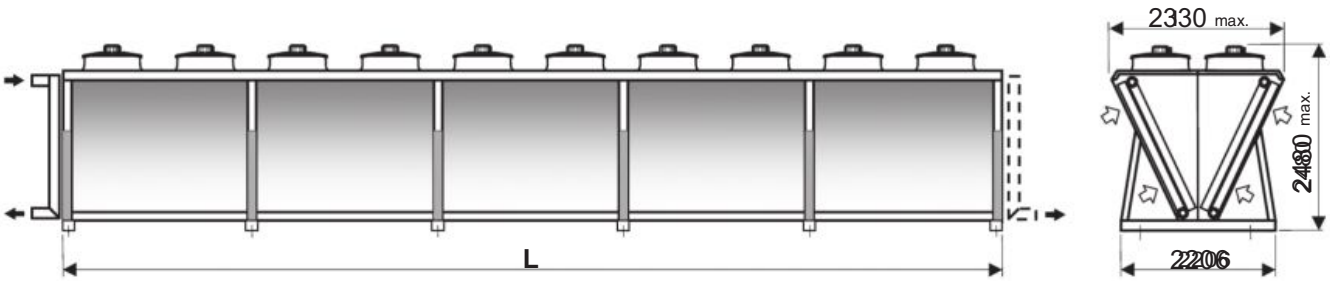

	1060	1080	1100	1120	1140	1160	1180	1200
L (mm)	3550	4700	5850	7000	8150	9300	10450	11660
l (mm)	2305 to 2420 depending on the model							

Up to size 1180, these units can be transported by container, if the width is compatible.
Dimensions without options.

Installation recommendations

- These units are designed to operate outside.
  When starting up, frost and snow could adversely impair its operation.
  As a general measure, all steps should be taken to avoid the risk of air recycling. This is especially important when the installation comprises several units.
  It is not recommended to install units near the hot air extraction duct outlet or close to deciduous plants (this could cause clogging).
- Allow a clearance of 1.5 m around the unit. Where the use of anti-vibration mounts is required, use a rigid frame which locks the feet together.
- If speed regulators other than those recommended by the manufacturer are used, check that these are compatible with the electric motors.
- **Commissioning and maintenance:** refer to the instruction manual.
- These units **comply with the European directives.** The installer is responsible for ensuring the compliance of the installation. The installer must ensure safety and protective devices (emergency stop, shut-off valves, lightning protection, etc.) are put in place and are accessible.

SOLUTIONS FOR ENERGY OPTIMISATION

For drycoolers & air-cooled condensers

CONTROL UNIT WITH AEROCONNECT ELECTRONIC BOARD

Optimised energy management

Information in multilingual clear text

AEROCONNECT is used to control the temperature or pressure, check the operating parameters, communicate with CIAT water chillers and diagnose and memorise faults.

- Control of AC motor stages, or management of EC motor speed by 0/10 V signal, based on the temperature or pressure.
- 2 setpoints: for example for summer/winter or daytime/night-time use. Used to reduce the operating speed and to improve the seasonal energy efficiency coefficient.
- Stage runtime balancing (AC motors).
- EC motor speed limitation.
- Management of misting.
- Management of free cooling.
- Communication:
  - Open ModBus-JBUS RS 485 protocol,
  - ModBus-ETHERNET TC/IP protocol,
  - LONWORKS/BACNET Protocol (option).

CONTROL CABINET CONTROLLED BY THE CHILLER

For drycoolers or air-cooled condensers linked to one of the following water chillers:

- DYNACIAT LG 080A to 600A
- DYNACIAT LGN 080A to 600A
- HYDROCIAT LW 708C to 4628C
- AQUACIAT LD 150A to 600A
- AQUACIAT^{POWER} LD 602C to 2000C

The drycooler or condenser can be equipped, as an option, with a managed control cabinet, to be linked to the water chiller. The unit will be controlled by the water chiller and the electricity consumption of the assembly will be optimised by shifting the condensing temperature according to the outdoor temperature.

3

287

EC MOTOR

- Integrated electronic switching,
- Speed variation from 0 to 100% by 0/10V signal, as required,
- Operation in 50 Hz and 60 Hz,
- Excellent efficiency,
- Integrated monitoring and protection device,
- Easy to wire up,
- Maintenance-free operation.

This new generation of motor offers High Energy Efficiency solutions.

Advantages of speed management by the control cabinet:
- A considerable reduction in annual electricity consumption,
- Optimisation of the sound level.

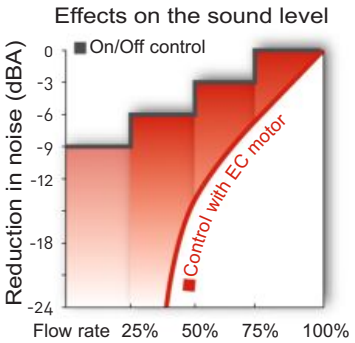

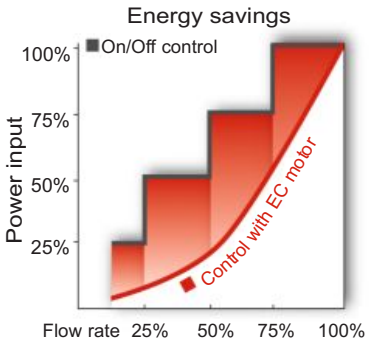

FREE COOLING

Free cooling can be used to significantly reduce annual consumption of electricity.
The CIAT System offer comprises a water chiller, a drycooler and their associated control boards.
As a drycooler consumes much less electricity than a water chiller, it is beneficial to make best use of the cool air in winter and mid-season to directly cool the process fluid using the drycooler instead of the water chiller.
This system will therefore considerably reduce your annual electricity consumption.

In summer, the drycooler is stopped.
In mid-season, it pre-cools the process fluid.
In winter, the water chiller is stopped; the drycooler directly cools the process fluid.

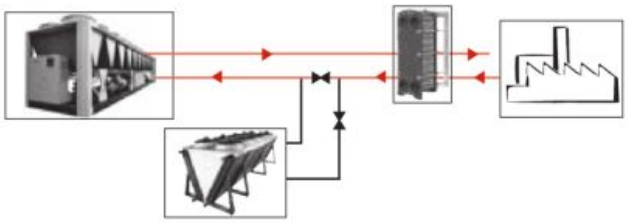

AEROFRESH

Adiabatic cooling system

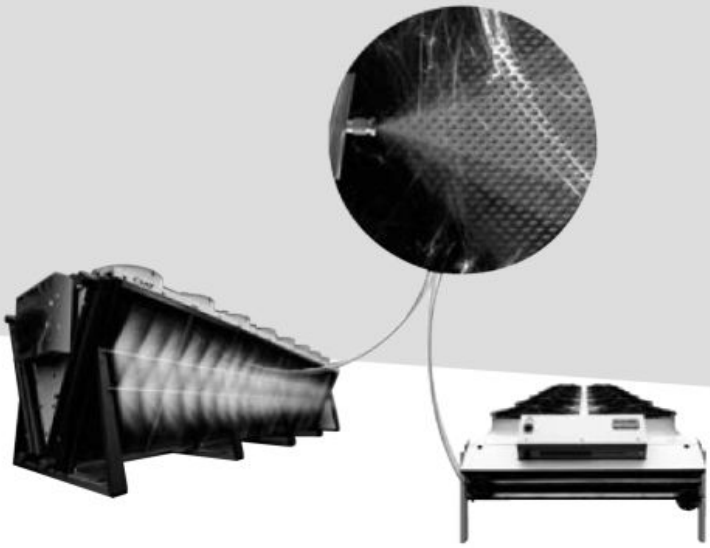

Alternative

to cooling towers

Smaller units

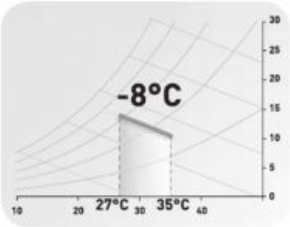

Use

AEROFRESH is integrated in drycoolers and air condensers, and provides adiabatic cooling of the air.
- Available for the VEXTRA and OPERA ranges (in horizontal position - induced draught).
- Used during the warmest periods.

Description

AEROFRESH is a complete air cooling system which uses water misting.

Misting is obtained using a high-pressure water spray technique (up to 100 bar). Ultra-fine droplets are sprayed in the opposite direction to the flow of air, causing them to evaporate instantly. The air is cooled before it enters the drycooler.

This system avoids having to oversize the system to cope with extreme but infrequent high temperatures.

AEROFRESH is composed of:
- an unit with a pump, solenoid valve, pressure gauge, pressure switch and 5 µ filter,
- stainless steel misting rails with brass anti-drip nozzles.

As an option, a premium version of this unit is available with an additional UV lamp for antibacterial water treatment and automatic controller for managing faults or maintenance.

AEROFRESH is also available in an ionised water version. All metal parts in contact with water are made from stainless steel, including the nozzles.

AEROFRESH is controlled by an AEROCONNECT control cabinet.

Advantages

- Smaller units.
- An alternative to cooling towers, misting allows the fluid temperature to be reduced.
- Increases the power of existing units.

Aerofresh advantages

- Optimised water consumption:
- Very limited water supply wastage thanks to optimised evaporation of ultra-fine droplets.
- To meet the requirements as closely as possible, several nozzle diameters are available and the pressure is set between 50 and 100 bar.

- Health and hygiene with the optional premium unit:
- Thanks to the antibacterial UV lamp.
- Thanks to daily flushing (pipes + cabinet) to prevent the formation of biofilm.

289

CONDENCIAT CL2

Condensing units

Outdoor condensing unit

for direct expansion applications

Variable speed propeller fan

Cooling capacity : *6,8 to 18,6 kW*

Cooling

UTILISATION

The **CONDENCIAT CL2** units with air-cooled condensers are designed for small sized refrigerating installations.

They are particularly suitable for industrial process, small shops, offices, restaurants.

Installed outdoors (propeller fan), they are directly connected, through refrigerant piping, to a direct water or air expansion exchanger.

They can be combined with a wide variety of indoor exchangers:

- Air handling box coil
- Separate water-cooling evaporator, EXEL, HF, FYN types.
- Integrated into a precision air handling cabinet such as Expair.
- Any type of comfort unit of equivalent capacity

We remind you that the control of air handling units should be studied with care when the direct expansion solution has been selected.

DESCRIPTION

Standard equipment

- Scroll compressor
- Crankcase heater on 50 - 65 - 75 models
- Air-cooled condenser, copper tubes coil, aluminium fins
- Propeller fan(s) (1 or 2 depending on models) with EC motor
- Year-round operation
- Condensing pressure control through fan speed variation (pressure sensor)
- Operation for outside temperatures between: -15°C and +45°C
- Casing in "ABS" synthesis material, recyclable and UV-stabilised, light and sturdy. Its exclusive and high-quality design facilitates its integration into its surroundings.
- Conforms to norms and directives:
  - → **CEM 2004/108/CE**
  - → **BT 2006/95/CE**
  - → **DEP 97/23/CE**

Optional equipment

- Antivibration mounts kit
- Wall support kit (models 28, 35)
- Crankcase heater on models 28, 35
- Thermostatic expansion kit
- Blygold pump kit

3

QUICK SELECTION

CONDENCIAT CL2

CONDENCIAT CL2	Number of circuits	Number of compressors	Cooling capacity (kW)	Power consumption (kW)
28	1	1	6,8	2,6
35	1	1	8,6	3,5
50	1	1	12,1	4
65	1	1	14,5	4,9
75	1	1	18,6	6,8

CL2 refrigerant fluid R410A
Evaporation temperature + 2 °C
DB air temperature at condenser = + 35 °C

DIMENSIONS

Models 28 and 35

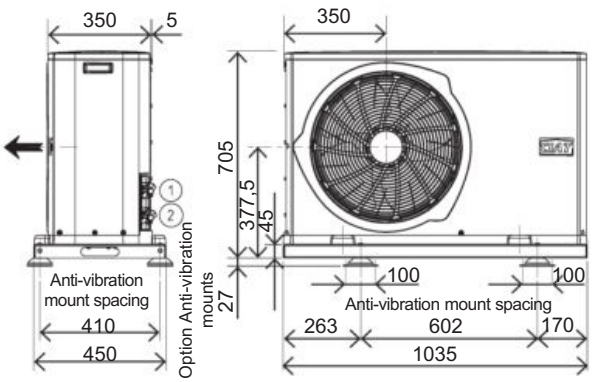

Models 50, 65 and 75

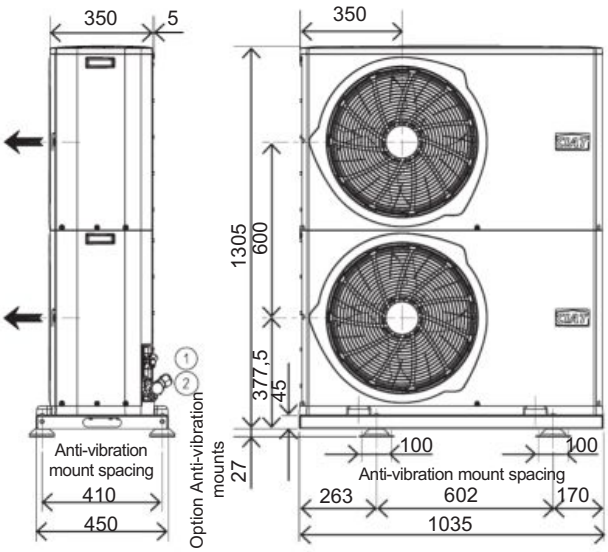

CONNECTION

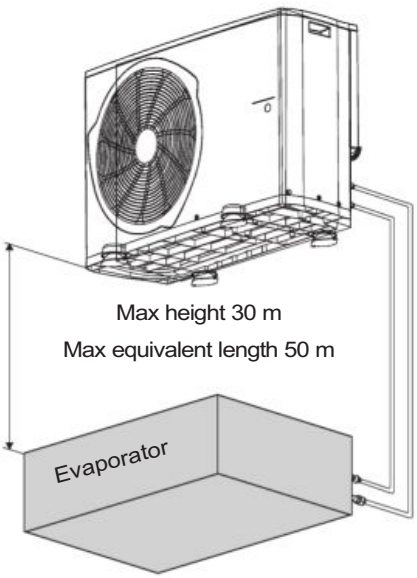

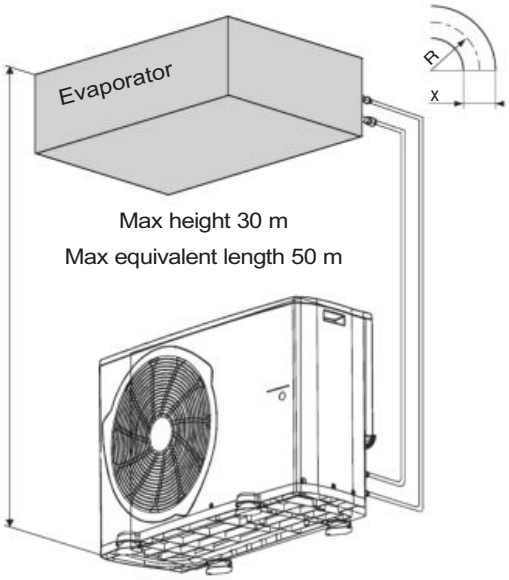

Equivalent length for 90° angle:

Tube diameter (inches)	1/4"	3/8"	1/2"	5/8"	3/4"	7/8"
Equivalent length (m)	0,25	0,35	0,45	0,55	0,65	0,7

All the network accessories must be taken into account.

TECHNICAL CHARACTERISTICS

CONDENCIAT CL2			28	35	50	65	75
Compressor	Number		1				
	Type		SCROLL				
	Oil capacity	l	1,25			1,7	
	Oil type		POE				
Refrigerant fluid			R410A				
Refrigerant weight		kg	1,6		2,65	2,75	3
Power and intensity Crankcase heater		W/A	45W / 0,2A Option (1)		45W / 0,2A		
Coil type			Copper tubes - aluminium fins				
Fan	Type		Propeller - direct drive				
	Number		1		2		
	Flow	m^3/h	2350	2770	4700	5540	5000
	Speed	Rpm	700	904	700	904	
Weight of unit		kg	69	69	101	112	118
Connection	Ø Liquid line	Inches	3/8"				1/2"
	Ø Intake line	Inches	5/8"	3/4"		7/8"	

(1) This option is compulsory if the total refrigerant charge exceeds 4.5 kg

ELECTRICAL CHARACTERISTICS

CONDENCIAT CL2			28	35	50	65	75
Compressor	Unit nominal voltage		400 V - 3 Ph - 50 Hz				
	Max. intensity	A	6,9	7,6	10,3	11,2	14,3
Fans	Max. intensity	A	0,46	0,97	0,92	1,94	1,94
Nominal voltage of unit		V	400 V - 3 Ph + N - 50 Hz				
Intensity		A	7,5	1	11,3	2	3
Starting intensity		A	36	49	65,5	4	102,5
Electrical cables not supplied *		mm^2	5G1,5	5G2,5	5G4	5G4	5G6
Proximity switch recommended rating		Am	10	10	16	16	20

* cable with 2 or 3 conductors in a raceway or exposed mounting, for temperatures below 60°C, 30 m max. length
Note : For other conditions, refer to the norm applied in the country of installation (example for France: NFC 15.100)

SOUND PRESSURE LEVELS **

CL2	28	35	50	65	75
Acoustic pressure dB(A)	39	45	43	47	47

** at 5 m from the unit, 1.5 m from the ground, free field, directivity 2.

293

CONDENCIAT CD

Air-cooled condensation units

Unit with protection grille option

Compact and silent

Compact and silent

Scroll compressors

All-season operation

Cooling capacity: 40 to 161 kW

Cooling only

UTILISATION

The new generation of **CONDENCIAT** condensation units is the solution for all split-system direct expansion cooling applications encountered within the office, healthcare, industry, administration, commercial and shared residential sectors.

These units are designed for outdoor installation and require no special protection against adverse weather conditions.

CONDENCIAT is optimised to use ozone-friendly HFC R410A refrigerant.

This units are designed to be connected on-site to one or more direct expansion exchangers of the following type:

- Direct expansion air treatment unit coil
- Separate shell and tube or brazed plate type water cooling evaporator.

RANGE

CONDENCIAT, CD series

Cooling only version.

3

295

DESCRIPTION

CONDENCIAT units are supplied as standard with the following components:
- Hermetic SCROLL compressors
- All-aluminium micro-channel coil
- Electrical power and remote control cabinet:
  - 400 V-3ph-50 Hz (+/-10 %) mains power supply + earth
  - transformer fitted as standard on the machine for supplying the remote control circuit with 24 V
- Electronic control module
- Casing for outdoor installation

The entire CONDENCIAT range complies with the following EC directives and standards:
- Machinery Directive 2006/42/EC
- Electromagnetic compatibility directive 2014/30/EC
- Electromagnetic immunity and emissions EN 61800-3 "C3 and C1"
- Low Voltage Directive 2014/35/EU
- RoHS 2011/65/EU
- Pressure Equipment Directive (PED) 2014/68/EU
- Machinery directive EN 60-204 -1
- Refrigeration systems and heat pumps EN 378-2

DESCRIPTION

CD 150 A

- **A** > generation of the range
- **150** > unit size
- **CD** > cooling only version

CONFIGURATION

CD	Standard
CD, XLN option	Standard Xtra Low Noise

Description of the main components

Compressors
- Hermetic SCROLL type
- Electronic motor overheating protection
- Crankcase heater
- Mounted on anti-vibration mounts

Air-cooled exchanger
- all-aluminium micro-channel coil
- propeller fans with composite blades offering an optimised profile, fixed speed as standard or variable speed as an option
- motors – IP 54, class F

Refrigerating accessories
- Dehumidifier filters
- Hygroscopic sight glasses
- Solenoid valves

Regulation and safety instruments
- Low and high pressure sensors
- Safety relief valves on refrigerating circuit

Electrical cabinet
- Electrical cabinet with IP 44 protection rating
- A connection point without neutral
- Front-mounted main safety switch with handle
- Control circuit transformer
- 24 V control circuit
- Fan and compressor motor circuit breaker
- Fan and compressor motor contactors
- Microprocessor-controlled electronic control module
- Wire numbering
- Marking of the main electrical components

Frame
Frame made from RAL7035 light grey & RAL 7024 graphite grey painted panels.

Control module
The electronic control module performs the following main functions:
- Management of compressor operation
- Management of fan operation
- Actuation of evaporator evacuation solenoid valves (valves delivered in a kit with the machine)

Remote management
Several contacts are available as standard, enabling the machine to be controlled remotely by wired link:
- Automatic operation control: when this contact is open, the machine stops
- Compressor stage control
- Fault reporting: this contact indicates the presence of a major fault which has caused one or both refrigerant circuits to stop
- Operational status reporting indicates that the unit is in production mode.

297

AVAILABLE OPTIONS

Options	Description	Avantages	CD
Xtra Low Noise	Acoustic compressor enclosure and low-speed fans	Noise emission reduction at reduced fan speed	•
Protection grilles	Metallic protection grilles	Coil protection against possible impact	•
Soft starter	Electronic starter on each compressor	Reduced start-up current	•
Winter operation (down to -20°C)	Controls the fan speed	Stable operation of the unit when the air temperature is between 0°C and -20°C.	•
Suction and liquid line valves	Ball valves on the suction and liquid line	Unit isolated from the rest of the refrigerating circuit	•
Conformance with Russian regulations	EAC certification	Conformance with Russian regulations	•
Replaceable filter dryer	Filter dryer with cartridge to replace the hermetic filter	Easy filter replacement without draining the refrigerating circuit	•
MCHE anti-corrosion protection Protect2	Coating by conversion process which modifies the surface of the aluminium producing a coating that is integral to the coil. Complete immersion in a bath to ensure 100% coverage. No heat transfer variation, tested 4000 hours salt spray per ASTM B117	Protect2 Improved corrosion resistance of the MCHE coils by 2, recommended for use in moderately corrosive environments	•
MCHE anti-corrosion protection Protect4	Extremely durable and flexible epoxy polymer coating applied on micro channel coils by electro coating process, final UV protective topcoat. Minimal heat transfer variation, tested 6000 hours constant neutral salt spray per ASTM B117, superior impact resistance per ASTM D2794	Protect4 Improved corrosion resistance of the MCHE coils by 4, recommended for use in corrosive environments	•
Anti-vibration mounts	Elastomer anti-vibration mounts to be fitted underneath the unit	Isolate unit from the building, avoid transmission of vibration and associated noise to the building. Must be associated with flexible connection on water side	•
Flexible refrigerating sleeves	Flexible connections on the refrigerant pipes	Easy to install. Limits the transmission of vibrations to the refrigerant network	•

• ALL MODELS

298

Environmental responsibility

The CONDENCIAT contributes to sustainable development via an environmentally responsible approach, aimed at balancing ecological and economic concerns.

The highly efficient performance it offers enables energy consumption to be greatly reduced, thereby reducing the unit's carbon footprint throughout its service life.

This performance is the result of the high quality components used, which have all been rigorously selected:
- The latest generation Scroll compressors
- Highly efficient R410A refrigerant, which has a low environmental impact: zero ODP (Ozone Depletion Potential), low GWP (Global Warming Potential)

MCHE micro-channel type coils for the cooling only version:
- 40% reduction in the refrigerant charge.
- Reduction in the unit weight, reducing the environmental impact during transportation
- Simplified end of life recycling thanks to the all-aluminium construction

Only 20% of a unit's impact on the ozone layer comes from the refrigerant (direct effect), with 80% coming from the CO_2 released into the atmosphere when the electricity required to power the unit is produced (indirect effect). With CONDENCIAT, it's a win-win situation: its low refrigerant charge minimises the risk of emissions, and its low energy consumption limits its indirect impact.

The choice of technology used in the CONDENCIAT range means that the TEWI, which covers the unit's environmental impact (both direct and indirect) throughout its service life, is greatly reduced.

Integration into the most demanding environments

The CONDENCIAT has standard and optional equipment which enables it to be integrated into any one of a diverse range of environments.

In the micro-channel (MCHE) coil, the rate of corrosion is less than in a conventional coil with copper tube and aluminium fins. Indeed, its all-aluminium design limits the galvanic couples in the coil, thereby providing increased corrosion resistance

- The Protect2 anti-corrosion post-treatment option doubles its resistance to corrosion. This treatment is applied by immersing the coil, ensuring complete protection as the aluminium surface undergoes a chemical change.

This treatment is recommended for moderately corrosive environments

- The Protect4 anti-corrosion post-treatment option provides a fourfold increase in resistance to corrosion. An e-coating process is used to electro-coat the coil in polymer epoxy, and then a top layer of anti-UV protection is applied.

This treatment is recommended for highly corrosive industrial and marine environments

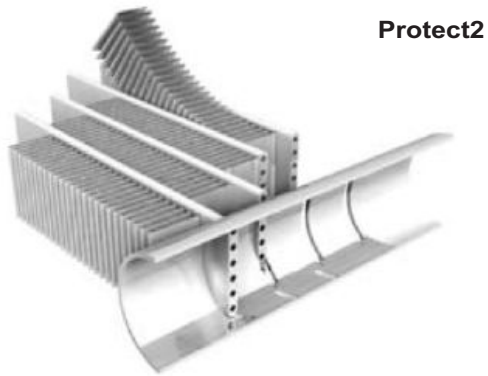
Protect2

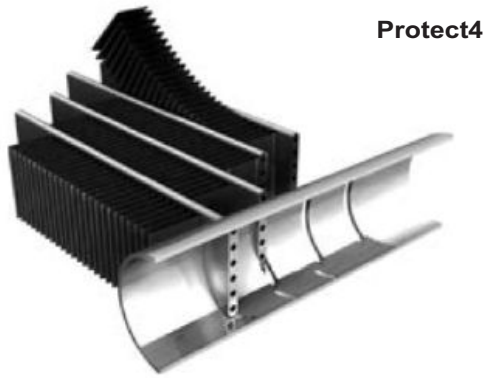
Protect4

TECHNICAL CHARACTERISTICS - COOLING ONLY

CONDENCIAT CD		150	180	200	240	260	300	360	390	450	520	600
Rated cooling capacity for standard units (1)	kW	40,4	45,9	52,4	58,5	66,7	77,9	90,4	100,9	119,4	139,6	161,7
Electrical power consumption	kW	13,8	16,3	19,0	21,2	24,4	28,8	31,8	36,0	43,6	50,2	58,7
EER	kW/kW	2,92	2,81	2,75	2,76	2,74	2,7	2,84	2,81	2,74	2,78	2,75
Sound levels												
Standard unit												
Sound power*	dB(A)	80	81	81	81	87	87	84	84	84	90	90
Sound pressure level at 10 m**	dB(A)	49	49	49	49	55	55	52	52	52	58	58
Standard unit + Xtra Low Noise option												
Sound power*	dB(A)	79	80	80	80	80	80	83	83	83	83	83
Pression acoustique à 10 m**	dB(A)	48	48	48	48	48	48	51	51	51	51	51
Dimensions												
Length	mm	1090	1090	1090	1090	1090	1090	2270	2270	2270	2270	2270
Width	mm	2110	2110	2110	2110	2110	2110	2123	2123	2123	2123	2123
Height	mm	1440	1440	1440	1440	1440	1440	1440	1440	1440	1440	1440
Operating weight* **												
Standard unit	kg	377	386	387	402	398	409	653	656	683	740	754
Compressor		Hermetic scroll compressor 48,3 rev/s										
Circuit A		2	2	2	2	2	2	3	3	3	2	2
Circuit B		-	-	-	-	-	-	-	-	-	2	2
Number of power stages		2	2	2	2	2	2	3	3	3	4	4
Refrigerant		R410A										
Control		Electronic control										
Minimum capacity	%	50	50	50	50	50	50	33	33	33	25	25
Distribution of capacity, circuit A/B	%	100/0	100/0	100/0	100/0	100/0	100/0	100/0	100/0	100/0	50/50	50/50
Condensers		All-aluminium "Micro Channel Heat Exchanger" coil										
Fans												
Quantity		1	1	1	1	1	1	2	2	2	2	2
Maximum total air flow	l/s	3885	3883	3987	3908	5013	5278	6940	6936	7370	10026	10556
Maximum rotation speed	tr/s	12	12	12	12	16	16	12	12	12	16	16
Refrigerant connections												
Suction pipe diameter	inch	1 3/8	1 3/8	1 3/8	1 3/8	1 3/8	1 3/8	1 5/8	1 5/8	1 5/8	1 5/8	1 5/8
Liquid pipe diameter	inch	7/8	7/8	7/8	7/8	7/8	7/8	7/8	7/8	7/8	7/8	7/8
Casing paint		Colour code: RAL 7035/7024										

(1) Rated conditions: evaporation temperature = 5°C, outdoor air temperature = 35°C, overheating = 5°C, equivalent length = 15 m.
* In dB ref=10^{-12} W, weighted (A). Declared dual-number noise emission values in accordance with ISO 4871 (with an associated uncertainty of +/-3dB(A)).
** In dB ref 20µPa, 'A' weighted. Declared dual-number noise emission values in accordance with ISO 4871 (with an associated uncertainty of +/-3dB(A)). For information, calculated from the sound power Lw(A).
*** Values are guidelines only. Refer to the unit nameplate.

ELECTRICAL DATA

CONDENCIAT CD		150	180	200	240	260	300	360	390	450	520	600
Power circuit												
Nominal power supply	V-ph-Hz	400-3-50										
Voltage range	V	360-440										
Control circuit supply		24 V, via internal transformer										
Maximum start-up current (Un)(1)												
Standard unit	A	114,2	132,4	141,3	143,7	170,4	209,4	169,4	196,4	240,4	226,2	275,2
Unit with soft starter option	A	74,7	86,5	93,8	96,2	114,4	139,8	130,4	155,4	181,4	186,4	215,4
Cosine Phi at maximum power(2)		0,83	0,81	0,81	0,83	0,81	0,78	0,83	0,81	0,79	0,81	0,78
Maximum unit power input(2)	kW	19,5	22,3	24,5	27,9	31,2	35,8	42,3	45,6	52,5	62,4	71,6
Unit rated current draw (3)	A	26,2	30,4	34,6	37,6	44,2	53,8	57,8	64,4	78,8	88,4	107,6
Maximum unit current draw (Un)(4)	A	35,6	40,0	43,8	48,6	55,8	65,8	74,3	81,8	96,8	111,6	131,6
Maximum unit current draw (Un-10%) *	A	38,0	49,0	51,2	57,8	73,2	79,8	88,1	107,9	117,9	146,4	159,6
Customer standby capacity, unit	kW	Customer standby on the 24 V control circuit										
Withstand capacity and short circuit protection		See the table "Short circuit current withstand capability"										

(1) Maximum instantaneous starting current (maximum operating current of the smallest compressor(s) + fan current(s) + locked rotor current of the largest compressor).
(2) Input power, compressors + fans at the unit operating limits (evaporation temperature = 15 °C, condensing temperature = 65 °C) and the nominal voltage of 400 V (data given on the unit nameplate)
(3) Rated conditions: evaporation temperature = 5 °C, outdoor temperature = 35 °C
(4) Maximum unit current draw at maximum unit power input and 400 V (values given on the unit nameplate)
* Maximum unit current draw at maximum unit power input and 360 V

Short circuit current withstand capability (TN system(1))

CONDENCIAT CD	150	180	200	240	260	300	360	390	450	520	600
Value without upstream protection											
Short time (1s) assigned current - Icw - kA eff	3,36	3,36	3,36	3,36	3,36	3,36	5,62	5,62	5,62	5,62	5,62
Allowable peak assigned current - Ipk - kA pk	20	20	20	20	20	15	20	20	15	20	15
Value with upstream protection											
Conditional short circuit assigned current Icc - kA eff	40	40	40	40	40	40	40	40	40	30	30
Associated Schneider circuit breaker Compact range type	NS100H	NS100H	NS100H	NS100H	NS100H	NS100H	NS100H	NS160H	NS160H	NS250H	NS250H
Reference number(2)	29670	29670	29670	29670	29670	29670	29670	30670	30670	31671	31671

(1) Type of system earthing
(2) If another current limiting protection device is used, its time-current trip and I2t thermal stress characteristics must be at least equivalent to those of the recommended Schneider circuit breaker. Contact your manufacturer's representative.

Dimensions

CONDENCIAT CD 150 to 300

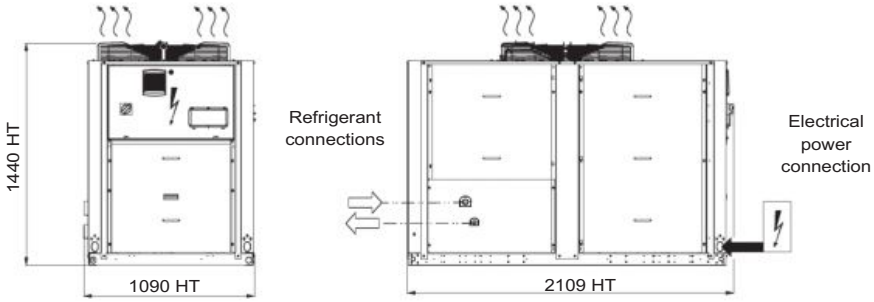

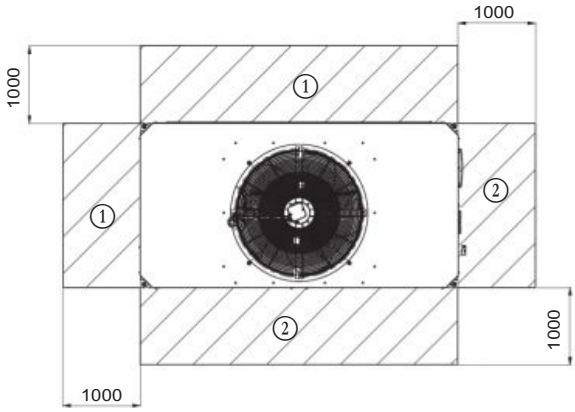

CONDENCIAT CD 360 to 450

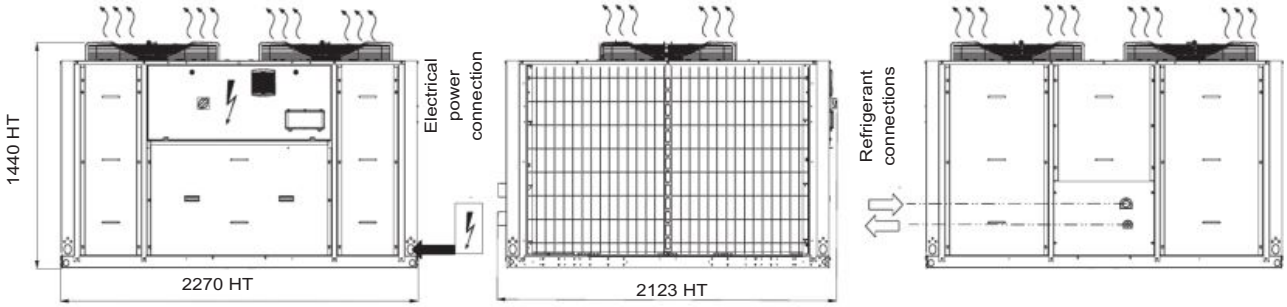

unit with protection grille option

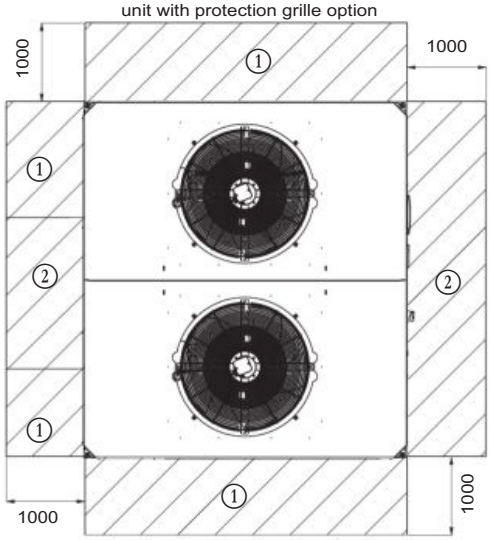

1 Space required for the air intake
2 Recommended space for maintenance
Refrigerant suction line connection
Refrigerant liquid line connection
Air outlet, do not obstruct
Power cable entry

ITEX

Gasketed plate
heat exchanger

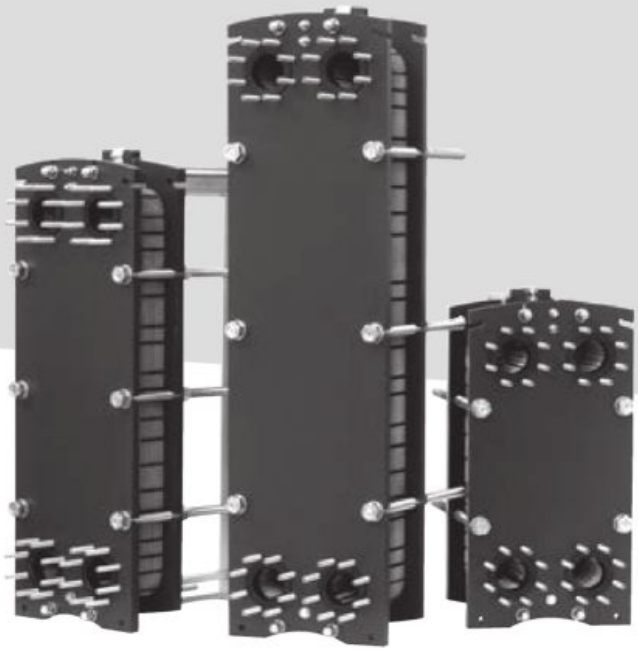

Offers high
heat transfer capacity
Particularly suited
to ***small temperature differences*** *between the two fluids*

Use

ITEX gasketed plate heat exchangers are particularly well suited to exchanges between two fluids, and therefore to a wide range of applications:

- Heating sub-stations
- Domestic water heating
- Swimming pool heating
- Buffer on heat pump
- Recovery from corrosive discharge
- Geothermal energy
- Oil refrigeration
- Industrial processes

Description

The unit is formed of a set of stamped plates **(P)** and gaskets tightened between 2 plates, one fixed **(F)** and one movable **(B)**, using compression bolts **(T)**. The gaskets **(J)** create flow channels between the plates and prevent venting to the atmosphere. The fluid connection is provided by four pipes **(M)** either integrated in the plate(s) or separate.

Note: the 1 pass/1 pass selection is the only case in which the four pipes are on the same plate.

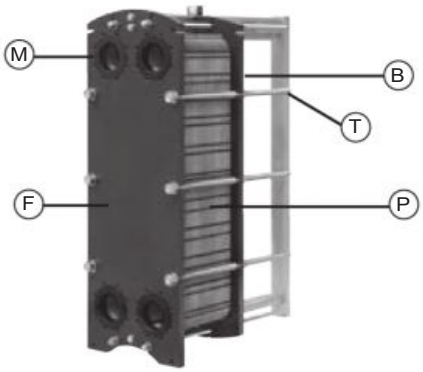

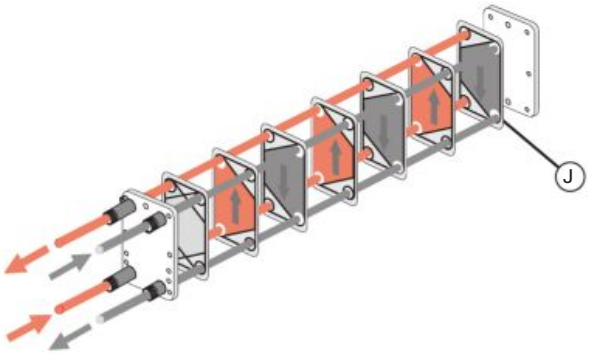

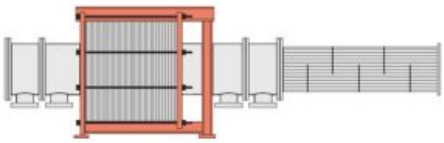

Compact footprint

Double gasket between fluids

3

Heating selection

Due to the range's extreme modularity, the selection has been optimised based on the thermal requirements and the allowable pressure drops for the fluids utilised. The importance of this factor must not be underestimated when selecting a heat exchanger, as it influences the choice and number of plates and thus the transfer area.
The transfer area is also influenced by other factors, such as the height to width ratio, the gap between the plates, and the angle and depth of the chevron patterns.

Advantages

- Excellent transfer coefficient, giving a reduced surface area.
- Very low pinch point temperatures possible.
- High corrosion durability.
- Compact footprint.
- Easy to install and maintain.
- Low-capacity circuits and fluid retention volume.
- Option of surface area extension.
- Unit can be cleaned in-place using a circulation system (NEP or CIP).
- Max. differential pressure = max. operating pressure.

Precautions

Do not damage the exchanger gaskets (one per plate):
- Prevent overheating, water hammer and overpressure, and limits on-off cycles.
- Do not use 1/4-turn valves.
- Use with steam between 0 and 3 bar (eff).
- Provide a control system adapted to the requirements and which takes the low capacity of the circuits into account..

Keep the plates clean to guarantee thermal efficiency:
- Filter fluids containing suspended particles.
- Ensure the fluids are constantly circulating in the exchanger to prevent any build-up or scale.
- Install nozzles on the pipes for cleaning in place.

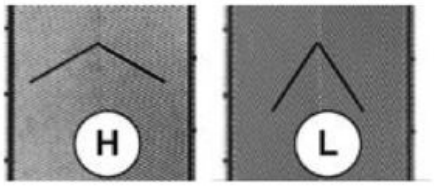

Different patterns

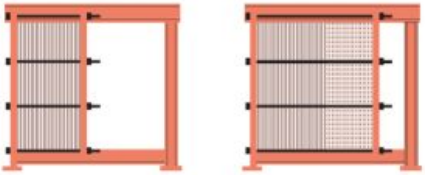
Plates can be added and removed easily

Range

		PWB 2+	PWB 4+	PWB 8+	PWB 7	PWB 16	PWB 26	PWB 11	PWB 18	PWB 30	PWB 45	PWB 70	PWB 40	PWB 60	PWB 90	PWB 65	PWB 99
Connection		DN 32	DN 32	DN 32	DN 50	DN 50	DN 50	DN 65	DN 65	DN 100	DN 100	DN 100	DN 150	DN 150	DN 150	DN 200	DN 200
Maximum flow rate (m³/h)		19	19	19	63	63	63	80	83	240	240	240	380	380	380	800	730
Pressure	Standard	10	10	10	10	10	10	10	10	10	10	10	10	10	10	10	10
Max. pressure	Stainless steel	25	25	25	25	25	25	16	10	25	25	25	16	16	16	16	16
	254 SMO	16	16	16	16	16	16	10	_	16	16	16	16	16	16	10	_
	Titanium	10	10	10	16	16	16	16	10	16	16	16	16	16	_	10	10
Plate patterns		H	H	H	H / L	H / L	H / L	H / L	H / L	H / L	H / L	H / L	H / L	H / L	H / L	H / L	H / L
Max. number of plates		75	75	101	151	251	251	151	151	401	401	401	551	551	701	551	551
Max. transfer area (m²)		1,6	3,1	8,2	11.6	40.8	63.3	19	27	107,5	193	279,5	215	355	631	334	534
Plate thickness	304 stainless steel	0,4	0,4	0,4	0,4	0,4	0,4	-	-	0.4/0.5 /0.6	0.4/0.5 /0.6	0.4/0.5 /0.6	0.5/0.6	0.5/0.6	0.5/0.6	0.5/0.6	0.5/0.6
	316L stainless steel	0.4/0.5 /0.6	0.4/0.5 /0.6	0.4/0.5 /0.6	0.4/0.5 /0.6	0.4/0.5 /0.6	0.4/0.5 /0.6	0,5	0,5	0.4/0.5 /0.6	0.4/0.5 /0.6	0.4/0.5 /0.6	0.5/0.6	0.5/0.6	0.5/0.6	0.5/0.6	0.5/0.6
	254 SMO	0,6	0,6	0,6	0,6	0,6	0,6	0,6	_	0,6	0,6	0,6	0,6	0,6	0,6	0,6	_
	Titanium	0,5	0,5	0,5	0,5	0,5	0,5	0,5	0,5	0,6	0,6	0,6	0,6	0,6	_	0,7	0,6
Plate patterns		*H*	*H*	*H*	*H / L*	*H / L*	*H / L*	*H / L*	*H / L*	*H / L*	*H / L*	*H / L*	*H / L*	*H / L*	*H / L*	*H / L*	*H / L*
Gasket materials	NBR (NITRILE)	YES	YES	YES	YES	YES	YES	YES	YES	YES	YES	YES	YES	YES	YES	YES	YES
	EPDM prx	YES	YES	YES	YES	YES	YES	YES	YES	YES	YES	YES	YES	YES	YES	YES	YES
	FPM	YES	YES	YES	YES	YES	YES	YES	_	YES	YES	YES	YES	YES	YES	YES	_

- The ITEX range is built with plug-in gaskets and lateral circulation.

THERMOFORMED INSULATION

Option DN 32 - DN50 - DN65

Description

The thermoformed insulation is flexible, semi-rigid prefabricated insulation that is easy to install and adjust to the exchanger's configuration and to customer requirements.
Supplied as a kit, it can be assembled quickly and easily, with no need for special tools (cutters or similar), using the assembly instruction sheet and the pre-punched templates.
Particularly well adapted to HVAC applications, its special "double-layered" structure, comprising two different closed cell expanded elastomers (max. thickness 30 mm) makes it suitable for HEATING and REFRIGERATION applications.

Range

DN 32: PWB 2+, PWB 4+ and PWB 8+ models.
DN 50: PWB 7, PWB 16 and PWB 26 models
DN 65: PWB 11, PWB 18 models.

Advantages

- Reduction in energy losses.
- Easy to adapt on site to the manufacturing configuration (single or multi-pass, with or without a mounting bracket kit, with or without condensate pan, etc.).
- Easy to adapt to customer requirements (for example: specific mounting brackets provided by the customer, specific circulation of fluids, etc.).
- Low installation cost.
- Lightweight and resilient.

Technical specifications

- Operating temperature limits: -10 °C / +130 °C.
- Thermal conductivity λ : 0.0376 W/mK (average value at 40 °C).
- Classification of fire rating of the insulating materials: compliant with the FMVSS 302 standard of flame containment at less than 100 mm/min.

Dimensions

DN 32				
PWB 2+	**L**	**H**	**W**	**H**
Max. 29 plates	280	450	130	125
Max. 49 plates	380	450	130	125
Max. 75 plates	580	450	130	125
PWB45	**L**	**H**	**W**	**H**
Max. 29 plates	280	595	130	125
Max. 49 plates	380	595	130	125
Max. 75 plates	580	595	130	125
PWB 8+	**L**	**H**	**W**	**H**
Max. 29 plates	280	865	130	125
Max. 49 plates	380	865	130	125
Max. 75 plates	580	865	130	125
Max. 101 plates	580	865	130	125

DN 65				
PWB 11	**L**	**H**	**W**	**H**
Max. 41 plates	472	958	185	208
Max. 71 plates	612	958	185	208
Max. 101 plates	752	958	185	208
Max. 151 plates	982	958	185	208
PWB 18	**L**	**H**	**W**	**H**
Max. 41 plates	481	1177	226	251,5
Max. 71 plates	611	1177	226	251,5
Max. 101 plates	741	1177	226	251,5
Max. 151 plates	951	1177	226	251,5

DN 50				
PWB 7	**L**	**H**	**W**	**H**
Max. 41 plates	472	858	185	250
Max. 71 plates	612	858	185	250
Max. 101 plates	752	858	185	250
Max. 151 plates	982	858	185	250
PWB 16	**L**	**H**	**W**	**H**
Max. 41 plates	472	1188	185	250
Max. 71 plates	612	1188	185	250
Max. 101 plates	752	1188	185	250
Max. 151 plates	982	1188	185	250
Max. 251 plates	1442	1188	185	250
PWB 26	**L**	**H**	**W**	**H**
Max. 41 plates	472	1533	185	250
Max. 71 plates	612	1533	185	250
Max. 101 plates	752	1533	185	250
Max. 151 plates	982	1533	185	250
Max. 251 plates	1442	1533	185	250

All dimensions are given in mm. The dimensional tolerance is compatible with the accuracy permitted by the thermoforming process.

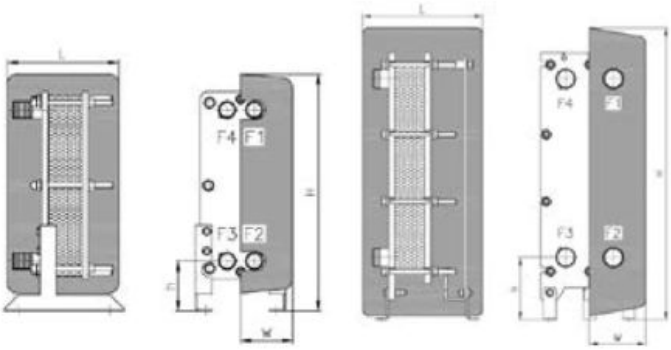

PANEL INSULATION

Option DN 100 - DN 150 - DN 200

Description

This insulation is specially designed for the HVAC applications performed by our jointed plate heat exchangers.
It has a modular, self-supporting structure created from insulating panels (45 mm thick) anchored together using hook fasteners and coupled so as to minimise thermal bridges.
The distinctive sandwich structure of the insulating panels, obtained by combining polyurethane foam with sheet aluminium, offers the assembly a high degree of thermal insulation, good structural rigidity and a usable surface finish.
Provided as a kit, it is quick and easy to assemble with no special tools needed.

Advantages

- The exchanger is completely contained within the insulation: this not only minimises condensation and heat loss, but also provides a high level of safety and comfort to operators working around the exchanger.
- Quick and easy access to the heat exchanger for inspection.
- Low installation costs.

Technical specifications

- External finish of the panels: smooth sheet aluminium, pre-painted in RAL 2306 (0.5 mm thick).
- Insulating material: rigid polyurethane foam with a high percentage of closed cells (more than 95 %) and a density of 48 kg/m3.
- Initial thermal conductivity (λ) of the insulating material: 0.024 W/m°C (value measured at an average temperature of 10 °C as per ISO standard 8302).
- Operating temperature range: -10 ° / +130 °C.
- Material fire rating: B – 2 s, d 0 (in accordance with UNI EN 13501-1 :2007).

Dimensions

DN 100				
PWB30	**L**	**H**	**W**	**H**
Max. 101 plates	1074	1180	678	198
Max. 201 plates	1574	1180	678	198
Max. 301 plates	2074	1180	678	198
Max. 401 plates	2574	1180	678	198
PWB45	**L**	**H**	**W**	**H**
Max. 101 plates	1074	1625	678	198
Max. 201 plates	1574	1625	678	198
Max. 301 plates	2074	1625	678	198
Max. 401 plates	2574	1625	678	198
PWB70	**L**	**H**	**W**	**H**
Max. 101 plates	1074	2070	678	198
Max. 201 plates	1574	2070	678	198
Max. 301 plates	2074	2070	678	198
Max. 401 plates	2574	2070	678	198

DN200				
PWB65	**L**	**H**	**W**	**H**
Max. 151 plates	1504	1764	957	285
Max. 251 plates	2104	1764	957	285
Max. 351 plates	2504	1764	957	285
Max. 551 plates	3404	1764	957	285
PWB99	**L**	**H**	**W**	**H**
Max. 151 plates	1504	2263	957	285
Max. 251 plates	2104	2263	957	285
Max. 351 plates	2504	2263	957	285
Max. 551 plates	3404	2263	957	285

DN 150				
PWB40	**L**	**H**	**W**	**H**
Max. 101 plates	1074	1433	757	256
Max. 201 plates	1574	1433	757	256
Max. 301 plates	2074	1433	757	256
Max. 401 plates	2574	1433	757	256
Max. 551 plates	3374	1433	757	256
PWB60	**L**	**H**	**W**	**H**
Max. 101 plates	1074	1881	757	256
Max. 201 plates	1574	1881	757	256
Max. 301 plates	2074	1881	757	256
Max. 401 plates	2574	1881	757	256
Max. 551 plates	3374	1881	757	256
PWB90	**L**	**H**	**W**	**H**
Max. 101 plates	1074	2374	757	256
Max. 201 plates	1574	2374	757	256
Max. 301 plates	2074	2374	757	256
Max. 401 plates	2574	2374	757	256
Max. 551 plates	3374	2374	757	256
Max. 701 plates	4204	2374	757	256

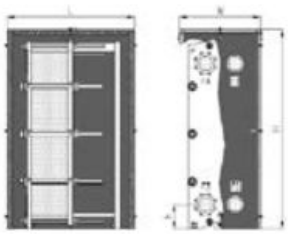

All dimensions are given in mm. The dimensional tolerance is compatible with the accuracy permitted by the thermoforming process.

The dimensions of the hooks on the closure panels are not included. Add 30 mm to sides W and L, 15 mm to side H.

Condensate drain pan

Option for all sizes

Description

The recovery pan is designed to drain not just the water forming condensation on the exchanger, but also any fluid which could come from an accidental leak around the exchanger, or during opening for maintenance.
Its use is recommended in all applications which carry a risk of condensation and those which carry a risk of environmental pollution.
The pan is made from stainless steel and is designed to be installed underneath the exchanger.
It is positioned and secured to the exchanger using a system of screws, nuts and washers.

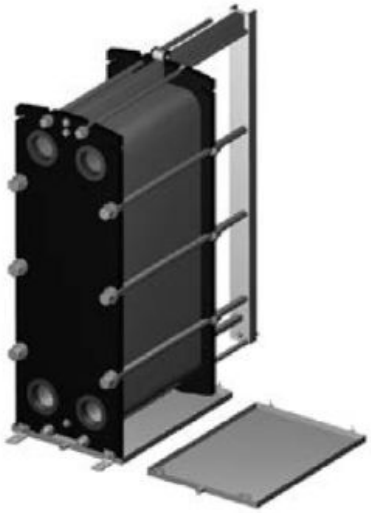

Advantages

- Recovery and drainage of all traces of condensation which could form on the external surface of the exchanger.
- Recovery and drainage of any fluids which could accidentally escape from the exchanger: ensuring the safety of personnel and of the environment.

Technical specifications

- Stainless steel panels (AISI 304).
- ¾" sleeve (internal tapping) for drainage of the collected fluids.

Precaution

Connect the ¾" sleeve to a suitable discharge system.

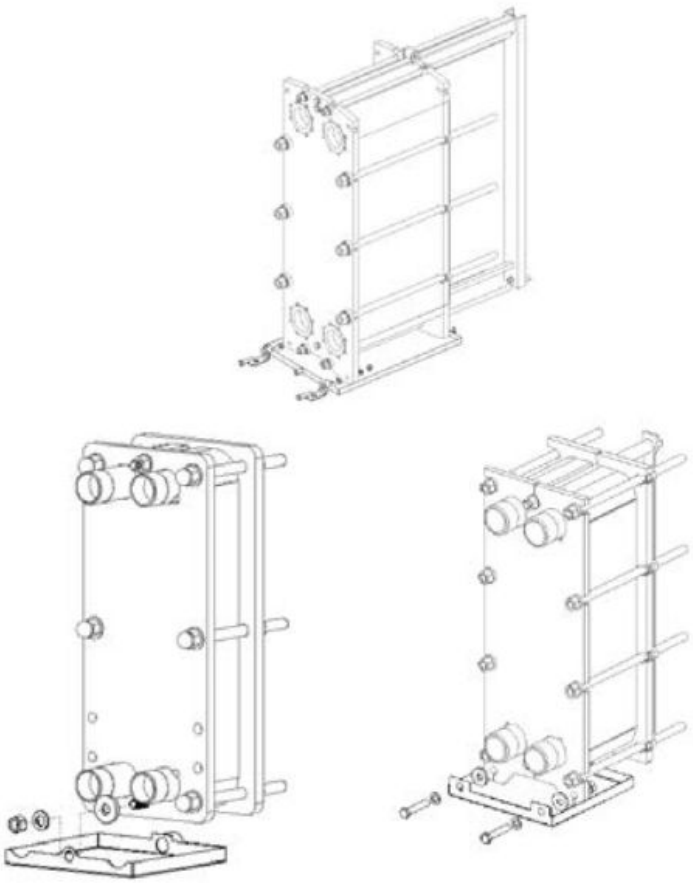

307

THERMAL ENERGY STORAGE

A sustainable
approach to buildings

For your systems ≥ 500 kW

CIAT optimizes the design and the operation of your installation for all applications in both commercial and industrial buildings

HVAC SYSTEM WITH STORAGE

The Thermal Energy Storage (TES) system along with your chillers is composed of one or several tanks filled with spherical elements called nodules that contain the Phase Change Materials (PCM). The use of PCM in nodules provides very high energy density and power exchange.

Nodules
Core TES Technology
Encapsulation of PCM

▶ Reliability
Competitiveness

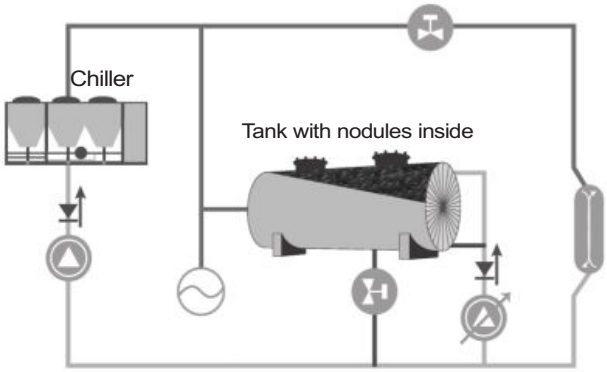

UNIQUE GLOBAL PCM EXPERTISE

- MCP (élaboration, nucléation, caractérisation, durabilité, recyclabilité)
- Conditionnement et encapsulation des MCP
- Matériaux d'enveloppe (compatibilité des matériaux, vieillissement)
- Processus de fabrication industrielle

MONITORED & CONTROLLED SYSTEM

The control and monitoring system optimizes the operation of the installation. It helps contractors and owners to optimize energy consumption, lower CO_2 and greenhouse gas emissions and reduce operating costs..

Controls

- Operating modes automatic management
- Thermal equipment regulation
- Stored energy optimization

Monitoring

- Local and remote monitoring
- Alarm notification
- Real-time view of operating parameters

Auto-adaptative module

- Daily optimization
- Predictive calculation of the daily cooling demand
- Permanent operating adaptation

SHIFT YOUR ELECTRICITY CONSUMPTION FROM PEAK TO OFF PEAK HOURS

Histogram Of A Building's Daily Cooling Needs And Its Electricity Consumption Profile

Without Thermal Energy Storage

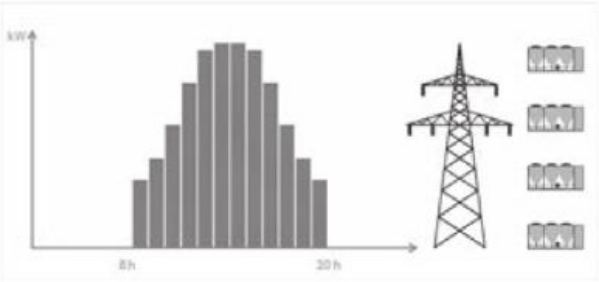

With Thermal Energy Storage

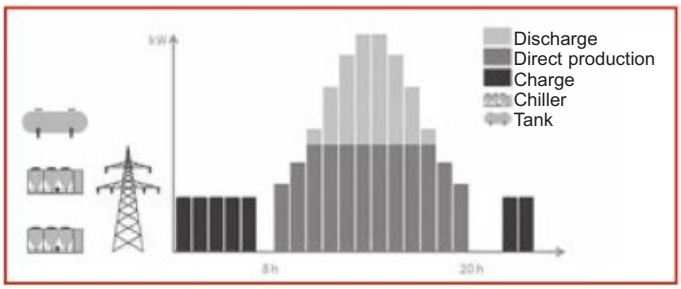

OPTIMAL COOLING

The expertise to tailor-make your cooling solution

Turnkey solution

CIAT supports consulting engineers by customizing the hydraulic layout for each project: application, operating conditions and specific customer needs. When necessary, complementary technologies such as free cooling or energy recovery are integrated.

Proven technology

CIAT has unique expertise in Phase Change Materials (PCM) based on over 30 years of Research & Development in partnership with universities and technical centers in Europe. This Thermal Energy Storage (TES) solution by latent heat allows TEWI* benefits from 15% to 40%**.

Unique expertise

CIAT engineers have unique and proven expertise, including in-depth knowledge of dual cooling and automation. The team collaborates closely with Sophia-Antipolis, Europe's largest technology park and is involved in several European research and innovation projects.

OPTIMIZED SAVINGS

Smart energy use for operational optimization

Reduced operating costs

By storing thermal energy during the night and releasing it during the day, the Thermal Energy Storage system consumes electricity at lowest prices and avoids peak times. By spreading thermal energy production over 24 hours, this solution can reduce chiller capacity by 30 to 70%***.

Non-stop support

CIAT expert engineers advise and support you daily. Thanks to regular monitoring and follow-up you can optimize the operation of your cooling installation. CIAT also offers additional services (training, on-site intervention, trending…) throughout the lifecycle of your installation.

Smart-grid ready

By shutting down electricity-hungry energy producers on demand and forcing the discharge of the system, the TES system regulates equipment to respond to peak electricity alerts on the power grid. This solution can also be combined with renewable energy (wind turbines, photovoltaics).

*TEWI: Total Equivalent Warming Impact - ** / ***Source: Measured differences between equivalent systems designed with and without TES.

CIAT

COMFORT UNITS
HYSYS® SYSTEM

COMFORT UNITS

COADIS LINE 600 ..... P.315
1 to 5kW | 1.7 to 6kW

COADIS LINE 900 ..... P.327
3 to 10kW | 3 to 9kW

MELODY2 ..... P.335
1.5 to 8.7kW | 1.3 to 11.6kW

MAJOR LINE P.343
0.7 to 8.5kW | 0.9 to 9kW

COMFORT LINE P.359
0.7 to 14kW | 0.7 to 17kW

CONTROL FOR COMFORT UNITS

COMFORT UNIT CONTROLS P.383

V30 ..... P.393

V300 ..... P.397

V3000 KNX P.401

FRESH AIR CONTROL P.405

HYSYS® THE SYSTEM SOLUTION ON WATER LOOP

HYSYS®: THE HYDRAULIC SOLUTION P.407

HYSYS®: THE AERAULIC SOLUTION P.409

HYSYS®: THE INTELLIGENT SOLUTION P.411

Epure Dynamics P.411

SYSTEM CONTROL

SMART CIATCONTROL P.415

Cooling Heating

COADIS LINE 600

Comfort units
COANDA effect cassette

VISUAL 180°

VISUAL 360°

COADIS LINE 600

the new generation of cassette comfort units

Innovative casing (Flexiway concept)

integrates perfectly into suspended ceilings

Air purification system

Cooling capacity: 1 kW to 6 kW

Heating capacity: 2 to 10 kW

COADIS LINE, INNOVATION AHEAD OF ITS TIME...

- CIAT has once again exceeded the established standards by offering increasingly innovative products in terms of environmental protection, while ensuring the user remains the key concern.
- Combining energy efficiency, comfort and indoor air quality, the **COADIS LINE** is the all-in-one solution designed to meet the heating and cooling requirements of tertiary buildings, while offering users maximum comfort.
- An active, variable-speed comfort unit offering high energy efficiency (HEE system), it allows the indoor temperature to be autonomously and independently adapted over very short periods to ensure the comfort of occupants.
- The EPURE function (air purification system) ensures an exceptionally high quality of indoor air by maintaining the concentration of PM 2.5 particles below the threshold recommended by the WHO (10µg/m^3).
- Thanks to its single-size casing, the COADIS LINE can be fitted with 180° and 360° diffusion in order to suit different building layouts (FLEXIWAY concept).
- The Coanda effect diffusion has been redesigned and optimised in accordance with standard NF EN ISO 7730, guaranteeing optimal management of thermal phenomena which create discomfort. In addition, the COADIS LINE eliminates the sensation of draughts that can occur with sweeping diffusion systems or those supplying air directly to the occupants.
- The innovative casing of the COADIS LINE - an eco-designed product which is 90% recyclable - reduces the environmental impact throughout the duration of its life cycle.

COADIS LINE 600

Comfort units
COANDA effect cassette

Range

The range of COADIS LINE 600 cassettes features 7 sizes covering flow rates from 250 to 770 m³/h, and meeting the most stringent sound level requirements.

→ 2 diffusion models
- Visual 180 °: Coanda effect diffuser across 180 °
- Visual 360°: Coanda effect diffuser across 360 °

→ The COADIS LINE is available as:
- A 2-pipe system, with heating or cooling mode
- A 2-pipe + 2-wire system, with cooling + heating/cooling + electric mode.
- A 4-pipe system, with heating and cooling mode.

Advantages

- Uses an ecological and long-lasting heat-transfer fluid.
- Individual adaptation of the indoor temperature.
- Responsiveness of the system.
- Extensive capacity range.
- Diffusion by Coanda effect across 180 °or 360 ° for comprehensive coverage, and perfect control of thermal phenomena which cause discomfort.
- Acoustic comfort.
- Optimum indoor air quality thanks to the EPURE function.
- Energy optimisation:
  - High Energy Efficiency motor
  - Epure filter.
  - Optimised hydraulic coil.
- Modularity for indoor spaces (Flexiway).
- Condensate drain by gravity avoiding the need for a drain pump.
- Modern, elegant design to ensure perfect integration.
- Environmentally-responsible product.
- Ease of maintenance.

Innovative design

- New-generation casing combining high-density PSE integrating combined thermal and acoustic functionalities, ABS PC and a ribbed galvanised steel base panel to stiffen the assembly.
- Single-size casing for all unit sizes with base adapted to 600 x 600 mm suspended ceiling framework.
- Hydraulic, air and electrical connections on the same side for easier mounting, access and maintenance.
- Hygienic supply of fresh air with 100 mm diameter sleeve integrated directly in the casing with removable plug.

Function

The air we breathe is full of fine particles which enter the respiratory system to varying degrees.

The EPURE function (air purification system) exceeds the WHO's recommendations on particle removal, reducing PM2.5 particulates to below 10 µg/m³ in less than an hour. This is equivalent to a reduction of 50% to 90% in particulate matter.

Epure is the combination of all the components that make up the COADIS LINE:

- A protected stream of air that is free of particulates present in suspended ceilings,
- Optimised air diffusion over 180 ° or 360 ° using the Coanda effect and a suitable mixing rate to ensure uniform treatment of the room,
- Very high-efficiency local room-by-room filtration of PM2.5 fine particles,
- Filter area x10.

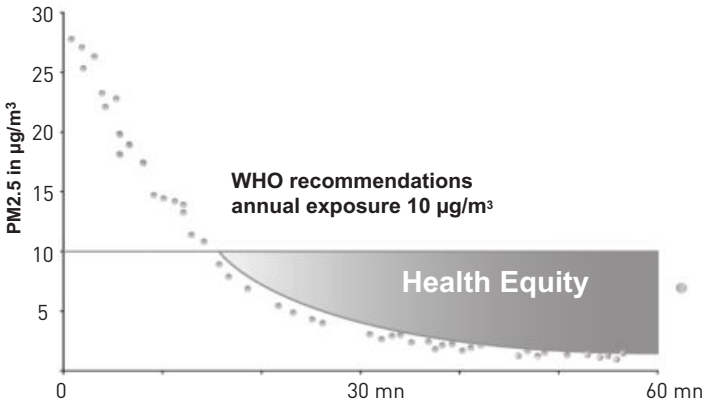

316

The Coanda Effect

VISUAL Coanda effect diffuser:

The single slot peripheral outlet with its narrow opening and specific internal profile will increase the initial speed of the air as it leaves the diffuser. The high speed of the moving flow of air causes an area of low pressure which keeps it close to the ceiling, (there is no direct blast on occupants) and the ambient air is drawn in by induction to be reinjected in the air stream. The air mix rate, the range and the coverage of the air flow are improved, which reduces thermal phenomena that cause discomfort in the occupied area (residual air flow rate, asymmetric temperatures, radiation caused by walls, etc.).

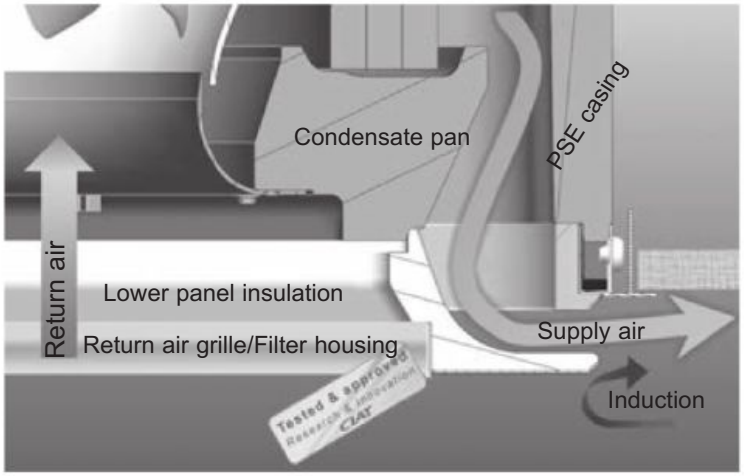

Cool air fall prevention system

The new 180° diffusers are equipped with an "anti-cold shower" system which guarantees maximum comfort by preventing air from falling between two cassettes.

The system is specially designed by our Research and Innovation centre; two deflectors integrated in the insulation enable the air stream from the lateral channels to be slightly redirected. When the units are placed side by side in the same room, the air flows do not oppose one another and cross over in parallel, which avoids any cold air draughts.

This patented system removes the discomfort caused by draughts without having to reduce the outlets and with no increased noise levels, while maintaining the air flow necessary for the thermal requirements.

Modularity and visual comfort

To ensure perfect visual integration within your building, the FLEXIWAY concept offers two Coanda effect single-vent diffusion systems (Visual 180° and 360°), interchangeable on site, suitable for partitioned offices and open plan spaces.

Designed in close collaboration with both architects and designers, each interface, in RAL 9010 white painted steel, will integrate perfectly into suspended ceiling tiles.

FLEXIWAY
Offers greater flexibility when modifying indoor partitioned spaces, in order to reduce operational costs. Enables optimal adaptation to the new configuration (offices or open spaces) without the need to replace the comfort unit. Based on a casing with a single format, Flexiway means that units already in place can be quickly switched for Visual 180° and 360° diffusers, which can be positioned in any direction thanks to their symmetrical mounting points. If the site to be altered only has a single diffuser model, it is possible to order the model of your choice which is supplied separately in its protective packaging.

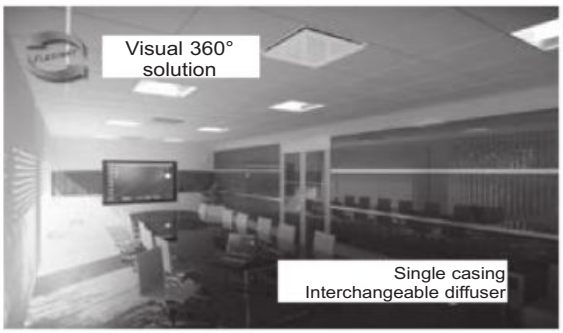

Perfect for new buildings, harmonising enclosed and open plan spaces. The Visual 180° solution is particularly suited to partitioned spaces from 10 to 20 m², with the unit positioned at the edge of the room. The Visual 360° solution is ideal for open plan areas with the unit positioned centrally.

The diffusion panels, which are delivered individually packaged, allow the unit to be installed easily without the risk of damaging or soiling the visible part.

Overview

The air handling box is fitted inside the suspended ceiling at the edge of the room with the supply air opposite windows and the electrics box facing the interior of the building for models with a Visual 180° return/diffusion panel. For Visual 360° models, position the box in the centre of the room with the electrics box facing the interior of the building. Leave a minimum space of 300 mm to 600 mm at the rear of the unit to allow access to all of the air, electrical and hydraulic connections.

The COADIS LINE must be suspended from the ceiling using four 6 mm or 8 mm threaded rods (not supplied) to be fixed to the four unit mounting brackets with the anti-vibration resilient mounts or a nut/washer assembly positioned either side of the mounting bracket.

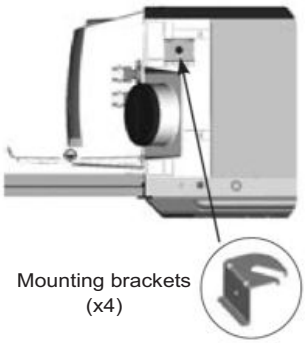

Mounting principle
2 methods

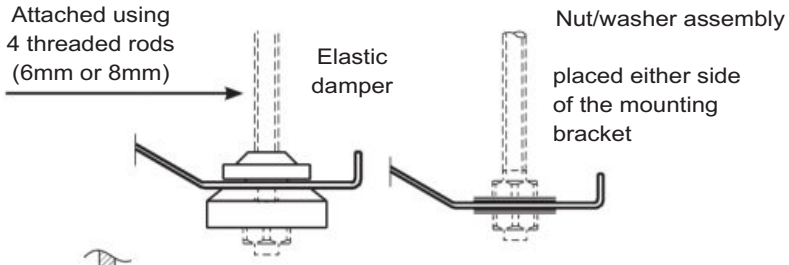

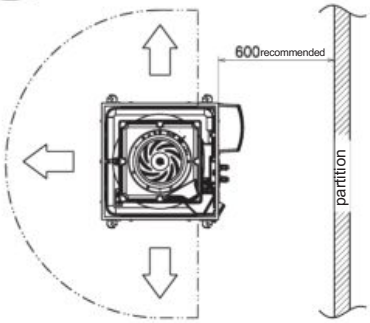

Casing position for Visual 180°
diffusion only

Mounting system for Visual diffusers with
4 captive screws

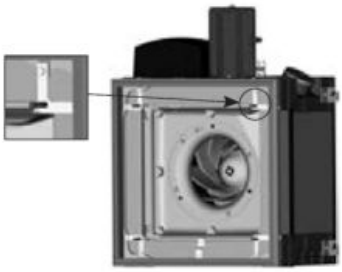

Fresh air inlet spigot

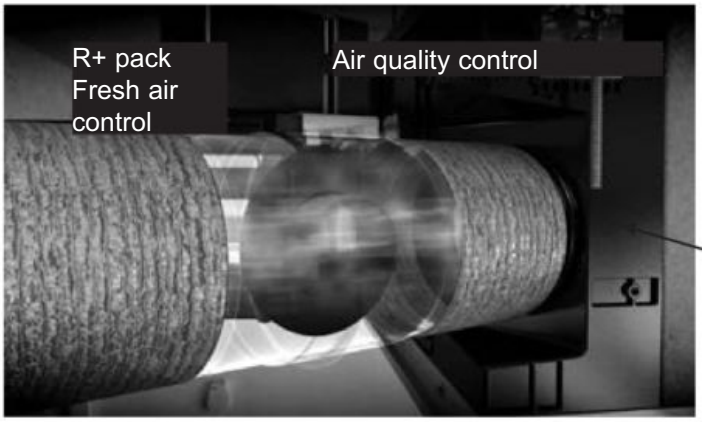

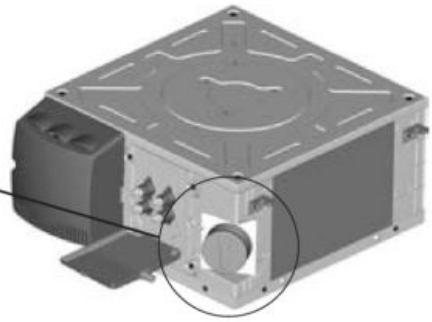

Ø 100 mm collar, max. air flow 90 m³/hr recommended.
Network balancing system (not supplied by CIAT)

IAQ pack

- For offices, air quality control with presence sensor (R1 pack),
- For meeting rooms, air quality control with CO_2 sensor (R+ pack).

COADIS LINE 600 MORPHO-DESCRIPTIVE CODE

Range	Size	Model	Coil type	Thermal function		Motor	Speeds	Filter
CDL	622	V360°	2T2W	F	+ 1200 W	HEE	depending on selection	EP

EP	Epure filter
G3	G3 filter

HEE 2-10V	Energy efficient motor 2-10V control
HEE ON/OFF	Energy efficient motor 3-speed control
AC	5-speed asynchronous motor

900W	For 622
1200W	For 632

F	Cooling
C	Heating
CF	Heating/cooling

2T	2-pipe
2T2W	2-pipe + electric system
4T	4-pipe

V180°	Visual 180°
V360°	Visual 360°

612	2-pipe
622	2-pipe
624	4-pipe
632	2-pipe
634	4-pipe

CDL	COADIS LINE

4

TECHNICAL DESCRIPTION

Return/supply air interface

VISUAL interfaces: Coanda effect diffusion via a single narrow opening vent and specific internal profile.

- 2 models available: Visual 180 °or 360 °.
- In sheet metal painted in RAL 9010 to be fitted over the chassis and exactly the same dimensions as a standard suspended ceiling tile.
- Micro-perforated hinge-mounted metal return air grille with housing for EPURE function filter, opens fully without tools.
- PSE insulation, M1 fire resistance with very low heat transfer coefficient.
- An "anti-cold shower" system which is patented (filed under No. 1451872) which prevents air from falling between the two cassettes when they are aligned around the edges of the room (only with Visual 180 ° diffuser).

Casing

- Single casing and reduced size for all unit sizes, fits in place of a 600 x 600 mm or 675 x 675 mm suspended ceiling tile (option).
- Reduced weight compared to the previous generation cassette.
- Ribbed galvanised steel motor support base panel, 10/10th thick.
- High-density PSE casing integrating thermal and acoustic functionalities. 15 mm base and 25 mm to 30 mm thick vertical sides that make up the enclosure.
- Low emission of TVOCs and no halogenated compounds.
- ABS corner reinforcements fitted with open galvanised one-way steel mounting brackets for assembly of threaded rods.
- Fire rating: M1.
- Hydraulic, air and electrical connections on the same side of the technical panel at the rear of the unit providing a single access point.
- Finish frame in RAL 9010 galvanised steel, 8/10th thick, housing the diffusion interface.
- Centring of the unit between the suspended ceiling profiles using anti-vibration elastomer mounts fitted on the finish frame.

Water coil

- 1 hot or cold water circuit (2-pipe system).
- 1 hot water circuit + 1 cold water circuit (4-pipe system).
- Single piece sleeve with 40 mm centre to centre distance with integrated sealed flush fitting female revolving unions, for easy fitting of the control valves.
- Low pressure drop one, two, or three layer circular coils.
- Copper pipes, one-piece aluminium fins (1.6 mm pitch).
- Purge and drain.
- Rated pressure 16 bar (at 20°C).
- Test pressure 24 bar.
- Max. hot water inlet temperature:
  - 4-pipe application: 80 °C,
  - 2-pipe application: 70 °C,
  - 2-pipe/2-wire application: 55°C (min air flow rate: 200m³/h).
- Min cold water inlet temperature: 6°C.

Electrical heater (2-pipe + electric system)

- 230/1/50 single-pipe electrical elements inserted into the aluminium housing.
- 2 temperature limiters, manually and automatically reset, inserted in the aluminium block with easy access that does not require the suspended ceiling to be opened, via the Intake / outlet interface.
- Heater element feed on the terminal block inside the electrics box.
- It is possible to deactivate a heater element on site by means of a shunt on the terminal to reduce the electrical power.

Condensate drain pan

- Single unit main pan in high-density sealed PSE for use in all climates, naturally sloped and removable from below without the need to open the suspended ceiling.
- Fire rating: M1.
- ABS PC auxiliary pan with no water retention provided as an accessory for the recovery of condensates from the valves and coming from the main pan.
- Gravity drain: height 70 mm.
- Drainage bushing: external Ø 15 to 20 mm.

Fan motor assembly

■ HEE motor

Low energy motor making it possible to reduce electrical consumption by up to 85%.

- Brushless technology.
- Sealed type, tropicalised with protected shaft.
- 3-speed gradual operation by 0-10V or on/off control signal, without expansion board.
- Internal normally closed series automatic overload protection on the windings.
- "DFS" motor fault output using a photocoupler for potential alarm feedback via a Konnex protocol communication bus (via the V3000 controller).
- Mounted on anti-vibration mounts.
- 230 V/1-Ph/50 Hz feed (60 Hz compatible).

Note: The minimum voltage to start up the motor is 2 V.

Or

■ Asynchronous motor

5 factory-wired speeds connected to a terminal strip for customisation.

- Sealed type, tropicalised with protected shaft.
- Permanent capacitor.
- Roller bearings.
- Internal normally closed series automatic overload protection on the windings.
- Resilient mounts.
- 230 V/1-Ph/50 Hz feed (60 Hz compatible).
- High output and Displacement Power Factor (Cos Phi).

■ Fan(s)

- Balanced centrifugal turbine Ø 282 mm with profiled blades.
- Polymer turbine.
- Single point mounting system with foolproofing device.

Electrics box

- Large ABS electrics box with supported hinge and closed with a bolt.
- IP20 Index of Protection.
- Electrical connection terminal on DIN rail in compliance with EN 50022, 7.5 mm deep.
- Marked out terminal strip with spring connectors. 0.5 to 2.5 mm² cross section - Max. current: 24 A – Shock resistance: 8 kV. Cable grommet for field connection.

Fresh air supply sleeve

Connection sleeve for fresh air inlet, Ø100 mm, integral to the frame with removable plug.

Air filter

- Epure function for superior indoor air quality.
- A protected air stream which prevents particles from being drawn into suspended ceilings.
- Uniform treatment of the room thanks to optimised diffusion over 180° or 360° using the Coanda effect.
- Suitable mixing rate.
- Local filtration by high efficiency filter medium effective on fine particles up to 2.5 microns.
- Filter area 10 times greater than the intake grille surface.
- No discharge from the filter during replacement thanks to the folded filter medium with heat-sealed lateral inserts to make it more rigid.
- Improved service life compared to a conventional flat filter, thanks to its high retention capacity.
- Low energy impact. Fire rating: M1.
- No release of glass fibres.
- 100% incinerable at end of life.

Device mounting

Open mounting brackets, factory-fitted, made from galvanised steel, 15/10th thick, with check valve for securing the threaded rods during fitting and levelling.

Packaging

- Strapped cardboard crate for the casing.
- Fitting template and direction of fitting printed on the cardboard.
- Visual return/supply air interface supplied separately in protective cardboard packaging.
- Delivered on film wrapped pallet from the factory.

Controls

- RTR-E electromechanical thermostat range
- V30 electronic range
- V300 electronic range
- V3000 networked electronic range (KNX)
- Networked electronic range (LON): V-LON2

Options (factory-fitted)

- Hydraulic coil with protected blades for aggressive / corrosive areas (locations close to the sea or with chemical industries located close by).
- Condensate drain pump.
- G3 filter.
- Extension.
- Finishing trim frame for 675 x 675 mm suspended ceiling tiles.
- Finishing trim frame for STAFF ceilings.

Accessories (available separately)

- Anti-vibration resilient mounts for mounting brackets.
- Self-regulating conditioned fresh air inlet module (3 flow rates adjustable using a set of shims).
- Ø 100-125 mm sleeve adapter.
- Condensate drain pump kit with high safety device.
- 230 V thermo valve kit.
- Prewired controller kit mounted on the plate.
- 80 mm riser kit for gravity drainage without condensate drain pump.
- Finish counter frame kit for 675 mm suspended ceiling tile.
- 300 mm connecting hose kit with or without 9 mm insulation.
- Fresh air pack:
  - R1: Fresh air managed via presence sensor.
  - R+: Fresh air management via CO_2 sensor (max. air flow 90 m^3/h recommended, network balancing system not supplied by CIAT).
- Speed control unit kit for HEE motors with 3-speed on/off control.

Integration into the suspended ceiling

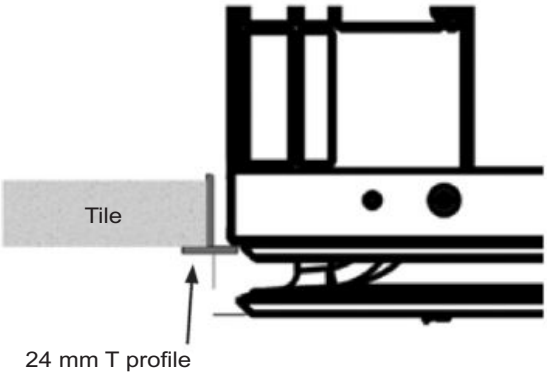

Mounting position with 600 x 600 mm suspended ceiling on T profile

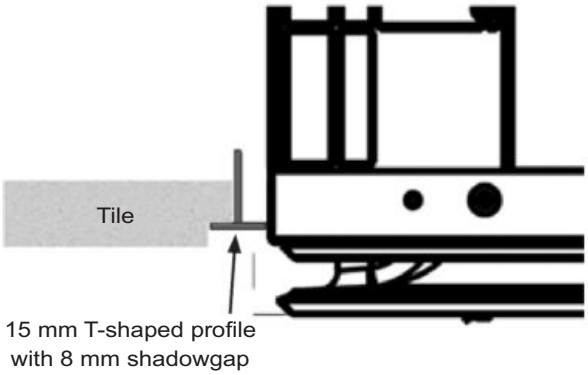

Mounting position with 600 x 600 mm suspended ceiling on T profile with 8 mm shadowgap

Note: not compatible with steel tray suspended ceilings and clip-in type mountings.

Dimensions

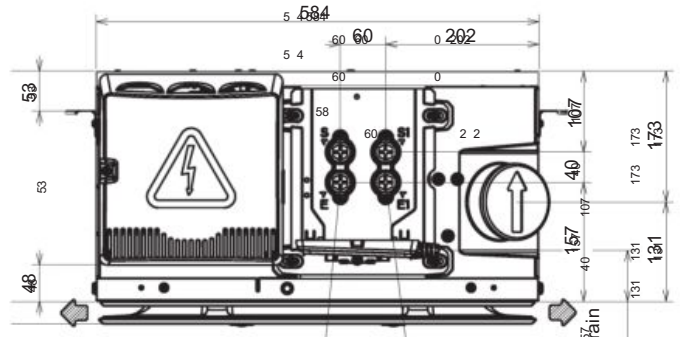

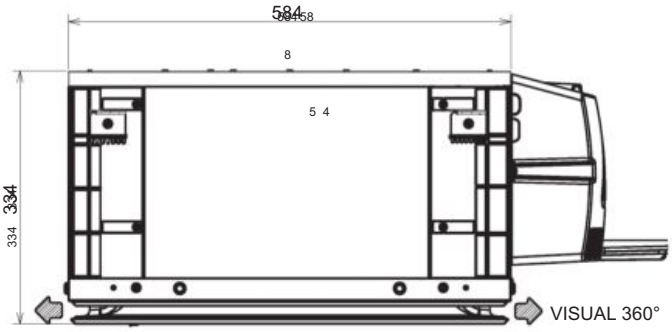

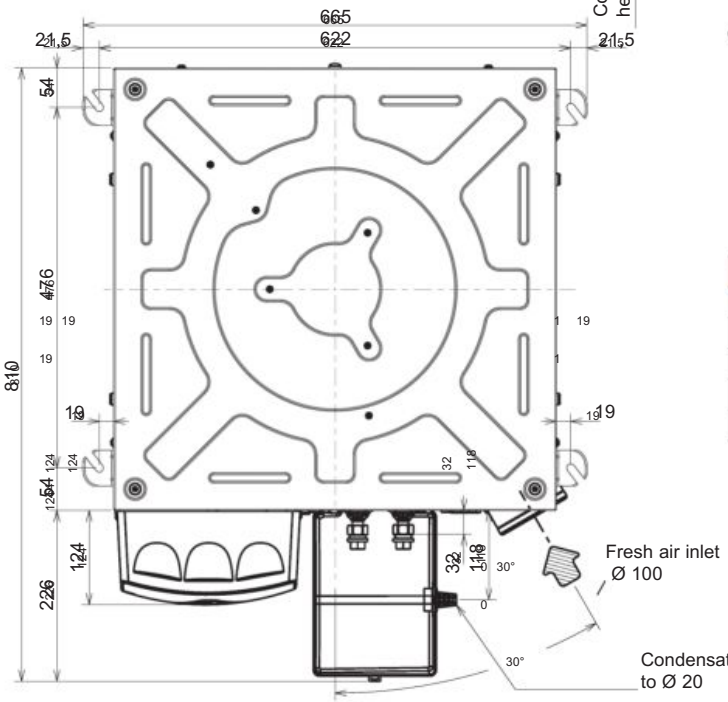

Coadis Line 600	Weight (kg)		
		Diffuser	Total
612	15	3,5	18,5
622	16,5		20
632	18		21,5
624	17		20,5
634	18,5		22

TECHNICAL CHARACTERISTICS

Coil capacity (L)

COADIS LINE 600		612	622	622E	632	632E	624	634
2-pipe coil		0,407	0,796	0,608	1,212	1,017		
4-pipe coil	Cold water coil						0,608	1,017
	Hot water coil						0,231	0,237

Coil coupling diameters

Coil connection type: flush fit female threaded union nuts
Valve outlet coupling type: "male" threaded couplings to be used

COADIS LINE 600		612	622	624	632	634
2-pipe system		G1/2"	G1/2"	G1/2"	G1/2"	G1/2"
4-pipe system	Cold water coil	G1/2"	G1/2"	G1/2"	G1/2"	G1/2"
	Hot water coil	G1/2"	G1/2"	G1/2"	G1/2"	G1/2"

Motor electrical data notes

COADIS LINE	Motor code	AC asynchronous motor			HEE brushless motor		
		612	622 - 624	632 -634	612	622 - 624	632 -634
Input power (W)	V5	70	70	101	38	38	56
	V4	45	45	77	17	17	38
	V3	41	41	56	12	12	21
	V2	38	38	47	8	8	15
	V1	34	34	40	5	5	11
Input current (A)	V5	0,30	0,30	0,32	0,18	0,18	0,40
	V4	0,21	0,21	0,29	0,09	0,09	0,28
	V3	0,19	0,19	0,24	0,07	0,07	0,17
	V2	0,18	0,18	0,22	0,04	0,04	0,13
	V1	0,17	0,17	0,21	0,02	0,02	0,10

Note: Specifications determined for 230V +/-10% - 50Hz supply.
For operation at 60Hz, the power input and rotation speed values are generally higher.

- Motor operating range: minimum return T°C: 0°C
maximum return T°: 40°C

Unit information plate

The information plate shows all the information needed to identify the unit and its configuration. This plate is placed on the technical side that has all the connections, above the fresh air inlet.

1. Code
2. Serial number
3. Description of the unit
4. Nominal motor output
5. Motor rotation speed
6. Coil type
7. Wiring diagram reference
8. Motor speed wiring
9. Maximum operating pressure
10. Electrical heater specifications (if fitted)

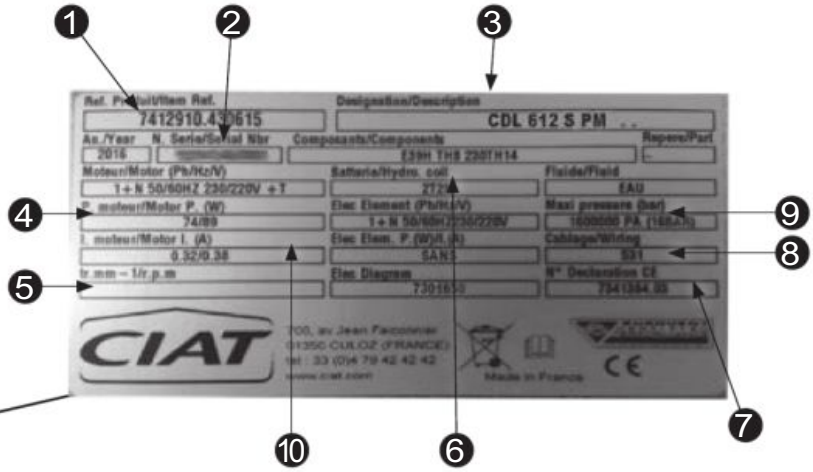

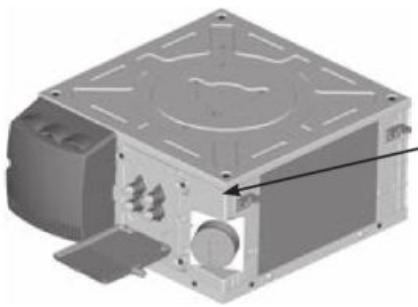

2T/4T AC MOTOR PERFORMANCE

COADIS LINE	Motor code	Air flow m³/h	2-pipe and 4-pipe systems			Power input W	LW dB(A)	Comfort level (ISO or NR)	Average increase of air temperature (in K) 230/1/50 auxiliary electrical heater	
			Cooling capacity (W)		Heating capacity (W)				2R	
			Total	Sensible						
612	V5	610	2 180	1 991	2 563	70	59	42		
	V4	440	1 765	1 582	2 051	45	49	32		
	V3	380	1 599	1 425	1 852	41	46	29		
	V2	310	1 429	1 256	1 627	38	42	25		
	V1	235	1 250	1 058	1 379	34	37	19		
622	V5	590	3 501	2 790	3 618	70	59	42		
	V4	420	2 662	2 054	2 713	45	51	34		
	V3	360	2 347	1 779	2 363	41	47	30		
	V2	290	2 016	1 488	1 988	38	42	25		
	V1	215	1 630	1 173	1 592	34	35	18		
622E	V5	590	2 635	2 336	2 992	70	59	42	900 W (2R)	4,5
	V4	420	2 114	1 818	2 385	45	51	34		6,4
	V3	360	1 930	1 604	2 140	41	47	30		7,4
	V2	290	1 699	1 362	1 868	38	42	25		9,2
	V1	215	1 468	1 108	1 565	34	35	18		12,4
624	V5	590	2 635	2 336	2 984	70	59	42		
	V4	420	2 114	1 818	2 464	45	51	34		
	V3	360	1 930	1 604	2 257	41	47	30		
	V2	290	1 699	1 362	2 029	38	42	25		
	V1	215	1 468	1 108	1 781	34	35	18		
632	V5	775	5 173	3 881	4 853	101	62	44		
	V4	660	2 262	3 318	4 176	77	58	40		
	V3	525	3 630	2 664	3 359	56	51	34		
	V2	460	3 226	2 348	2 962	47	48	30		
	V1	405	2 907	2 097	2 648	40	45	27		
632E	V5	775	4 401	3 493	4 633	101	62	44	1200 W (2R)	4,6
	V4	660	3 833	3 009	4 006	77	58	40		5,4
	V3	525	3 169	2 442	3 263	56	51	34		6,8
	V2	460	2 854	2 173	2 901	47	48	30		7,7
	V1	405	2 600	1 955	2 615	40	45	27		8,8
634	V5	775	4 401	3 493	3 363	101	62	44		
	V4	660	3 833	3 009	3 025	77	58	40		
	V3	525	3 169	2 442	2 623	56	51	34		
	V2	460	2 854	2 173	2 430	47	48	30		
	V1	405	2 600	1 955	2 275	40	45	27		

EUROVENT conditions Eurovent certified values

Cooling mode: water temperature: 7/12°C, inlet air temperature: 27°C - 19°C (WB)
Heating temperature (2P): water temperature: 45/40 °C, inlet air temperature: 20 °C
Heating temperature (4P): water temperature: 65/55 °C, inlet air temperature: 20 °C

2T/4T HEE MOTOR PERFORMANCE

COADIS LINE	Control voltage (V)	Air flow m³/h	2-pipe and 4-pipe systems			Power input W	LW dB(A)	Comfort level (ISO or NR)	Average increase of air temperature (in K) 230/1/50 auxiliary electrical heater	
			Cooling capacity (W)		Heating capacity (W)				2R	
			Total	Sensible						
612 HEE	6,7	610	2 160	1 969	2 582	38	59	42		
	4,9	440	1 745	1 561	2 070	17	49	32		
	4,2	380	1 577	1 401	1 872	12	46	29		
	3,4	310	1 403	1 229	1 650	8	42	25		
	2,5	235	1 221	1 029	1 404	5	37	19		
622 HEE	6,7	590	3 468	2 758	3 644	38	59	42		
	4,9	420	2 637	2 027	2 737	17	51	34		
	4,2	360	2 322	1 752	2 389	12	47	30		
	3,4	290	1 984	1 457	2 016	8	42	25		
	2,5	215	1 596	1 142	1 620	5	35	18		
622E HEE	6,7	590	2 609	2 309	3 014	38	59	42	900 W (2R)	4,5
	4,9	420	2 090	1 792	2 408	17	51	34		6,4
	4,2	360	1 904	1 577	2 164	12	47	30		7,4
	3,4	290	1 666	1 331	1 895	8	42	25		9,2
	2,5	215	1 430	1 076	1 594	5	35	18		12,4
624 HEE	6,7	590	2 609	2 309	2 997	38	59	42		
	4,9	420	2 090	1 792	2 477	17	51	34		
	4,2	360	1 904	1 577	2 272	12	47	30		
	3,4	290	1 666	1 331	2 045	8	42	25		
	2,5	215	1 430	1 076	1 799	5	35	18		
632 HEE	7,9	775	5 132	3 839	4 891	56	62	44		
	6,7	660	4 425	3 281	4 200	38	58	40		
	5,3	525	3 596	2 630	3 389	21	51	34		
	4,6	460	3 194	2 317	2 990	15	48	30		
	3	290	2 190	1 530	1 970	6	38	19		
632E HEE	7,9	775	4 364	3 454	4 670	56	62	44	1200 W (2R)	4,6
	6,7	660	3 798	2 973	4 038	38	58	40		5,4
	5,3	525	3 136	2 410	3 292	21	51	34		6,8
	4,6	460	2 822	2 142	2 929	15	48	30		7,7
	4,1	405	2 570	1 927	2 640	11	45	27		8,8
634 HEE	6,7	660	3 798	2 973	3 039	38	58	40		
	5,3	525	3 136	2 410	2 637	21	51	34		
	4,6	460	2 822	2 142	2 444	15	48	30		
	4,1	405	2 570	1 927	2 288	11	45	27		
	3	290	2 040	1 470	1 960	6	38	19		

EUROVENT conditions Eurovent certified values

Cooling mode: water temperature: 7/12°C, inlet air temperature: 27°C - 19°C (WB)
Heating temperature (2P): water temperature: 45/40 °C, inlet air temperature: 20 °C
Heating temperature (4P): water temperature: 65/55 °C, inlet air temperature: 20 °C

COADIS LINE 900

Comfort units
COANDA effect cassette

New generation of cassette comfort units based on the water loop 360° Coanda effect diffusion Energy efficient motor and high-efficiency filtration

Cooling capacity: 3 to 11 kW
Heating capacity: 3 to 20 kW

Use

The active water loop comfort unit, for installation in suspended ceilings, can be used to autonomously and individually adapt the indoor temperature over very short periods to ensure the comfort of occupants. Designed for offices, open plan areas, meeting rooms, commercial premises and entrance halls.

Range

The **COADIS LINE 900** range of cassettes features 9 sizes covering flow rates from 550 to 1400 m³/h, and meeting the most stringent sound level requirements.

- 1 Visual 360° diffusion model:
  Coanda effect diffuser across 360°
- The COADIS LINE is available as:
  - A 2-tube system, operating in cooling or heating mode,
  - A 2-tube + 2-wire system, operating in cooling or heating/cooling + electric mode,
  - A 4-tube system, operating in cooling and heating mode.

Advantages

- Uses an ecological and long-lasting heat-transfer fluid.
- Individual adaptation of the indoor temperature.
- Responsiveness of the system.
- Extensive capacity range.
- Diffusion by Coanda effect across 360° for comprehensive coverage, and perfect control of thermal phenomena which cause discomfort.
- Acoustic comfort.
- Optimum indoor air quality thanks to the EPURE function.
- Energy optimisation:
  - High Energy Efficiency motor,
  - EPURE filter with low pressure drop,
  - Optimised hydraulic coil.
- Maintenance facilitated by access to the filter and the highly accessible internal components.
- Modern, elegant design to ensure perfect integration.
- Environmentally-responsible product.

327

COADIS LINE 900 MORPHO-DESCRIPTIVE CODES

Range	Size	Model	Coil type	Thermal function		Motor	Speeds	Filter
CDL	922	V360°	2T2F	F	+ 2000W	HEE	As selected	G3

EP	Epure filter
G3	G3 filter

HEE 2-10V	Energy efficient motor, 2-10 V control
HEE ON/OFF	Energy efficient motor, 3-speed control
AC	5-speed asynchronous motor

2000W	For 922
3000W	For 932 and 932SP

F	Cooling
C	Heating
CF	Heating/cooling

2T	2-tube
2T2F	2-tube + electric mode
4T	4-tube

V360°	Visual 360°

922	2-tube
924	4-tube
932	2-tube
934	4-tube
932SP	2-tube
934SP	4-tube

CDL	COADIS LINE

328

TECHNICAL DESCRIPTION

Return/supply air interface

● VISUAL 360°
Painted galvanised steel.
PSE insulation, 10 to 40 mm thick.
Uniform RAL 9010 white colour for all components. Integration within a suspended ceiling, fitting in the centre of four tiles.
Perforated metal return air grille with filter housing with quick opening via 2 lugs.
Interface secured by 4 screws, to be removed to gain full access to the internal components (coil, FMA, temperature limiters, condensate pan, condensate drain pump).
Coanda effect diffusion which allows a jet of air to follow the ceiling, preventing cold air from dropping into the comfort area.
Coanda effect offers 360° coverage of the surface area of the room to be treated, with no dead zone.
Narrow single-slot opening and specific internal profile.

Frame

- Ribbed galvanised steel motor support base panel.
- High-density PSE packaged casing, ensuring the acoustic and thermal insulation. 18 mm thick for the base and 25 mm to 30 mm thick for the vertical walls which form the casing. M1 fire rating.
- Low emission of TVOCs and no halogenated compounds.
- ABS technical plate supporting the electrics box, hydraulic and air couplings (fresh air).
- Reinforcing ABS angle bars fitted in the corners and equipped with open galvanised steel mounting brackets with check valve for fitting threaded rods.
- Fixed frame in RAL 9010 (white) painted galvanised steel, housing the return/supply air interface and providing rigidity to the casing assembly.

Water coil

- 1 hot water or cold water circuit (2-tube system),
- 1 hot water + 1 cold water circuit (4-tube system),
- one-piece coupling (40 mm centre distance) with rotating female couplings with integrated flat face and seals, for easy fitting of control valves,
- one, two or three-row circular coil with low pressure drop,
- copper tubes, continuous aluminium fins (1.8 mm spacing),
- bleeding and draining,
- nominal pressure of 16 bar (at 20°C),
- test pressure of 24 bar,
- max. hot water inlet temperature:
  - 4-tube application: 80°C,
  - 2-tube application: 70°C,
  - 2-tube/2-wire application: 55°C (min. air flow rate: 200 m3/h)
- min. cold water inlet temperature: 6°C.

Electrical heater (2-tube + electric system)

230/1/50 single-tube electrical elements inserted into the aluminium housing.
Two temperature limiters with manual and automatic reset, inserted into the aluminium housing and easily accessible without the need to open the suspended ceiling
via the return/supply air interface.
Heater power supply connected to the terminal block inside the electrics box.
Option of deactivating a heater on site by removing a shunt from the terminal block, to reduce the electrical power.

Condensate drain pan

One-piece main pan with all-climate insulation in high-density PSE, with sealing treatment on the upper section.
Removable from below.
Condensate drainage (internal Ø 32 connection) provided by an internal drain pump equipped with a safety float, check valve and fitted on anti-vibration mounts.

Auxiliary pan available as an accessory for recovery of condensate from the valves.

Fan motor assembly

■ HEE motor

High energy efficiency motor enabling a reduction of up to 85% in electricity consumption.

- BLAC (Brushless Alternating Current) technology offering more linear torque progression and a lower operating sound level than BLDC (Brushless Direct Current) technology,
- sealed, tropicalised, with protected shaft,
- 3-speed gradual operation by 0-10V or on/off control signal, without expansion board,
- ball bearings,
- internal automatic overload protection as standard on winding,
- "DFS" motor fault output using a photocoupler for potential alarm feedback via a Konnex protocol communication bus (via the V3000 controller),
- fitted on anti-vibration mounts,
- 230V/1Ph/50 Hz power supply (60Hz compatible).

Note: The minimum voltage required for start-up of the motor is 2V.

Or

■ Asynchronous motor

5 factory-fitted cabled speeds (connected and available at the terminal) for customised adjustment.

- sealed, tropicalised, with protected shaft,
- permanent capacitor,
- ball bearings,
- internal automatic overload protection as standard on winding,
- resilient mounts,
- 230V/1Ph/50 Hz power supply (60Hz compatible),
- high efficiency and power factor.

■ Fan(s)

- balanced centrifugal impeller (Ø 476mm) with airfoil blades,
- polymer impeller,
- single-point mounting system with foolproofing device.

329

Electrics box

- Large ABS electrics box, with a hinge to keep it open and screw closure.
- Index of Protection: IP20.
- Terminal block on DIN rail in accordance with EN 50022, depth 7.5 mm.
- Junction block located with tension clamp. Cross section 0.5 to 2.5 mm² - Max current: 24A – Shock resistance: 8 kV.
- Cable routing for customer electrical connections.

Fresh air supply sleeve

- Ø 100 mm sleeve integrated into the casing with removable plug.

Air filter

- **EPURE function**

- a protected air stream which prevents particles present in the suspended ceilings from being drawn in,
- uniform treatment of the room thanks to optimised diffusion (Coanda effect) and an adapted mixing rate,
- local filtration by high efficiency filter medium effective on fine particles up to 2.5 microns,
- filter area 10 times greater than the intake grille surface,
- no discharge from the filter during replacement thanks to the folded filter medium with heat-sealed lateral inserts to make it more rigid
- longer service life compared to a conventional flat filter, thanks to its high retention capacity,
- low energy impact,
- fire rating: M1,
- no release of glass fibres,
- 100% incinerable at end of life.

Or

- flexible filter medium made of regenerative polyester fibre,
- efficiency class (EN 779): G3,
- fire rating: M1,
- rigid metal frame,
- accessible via the hinged air recovery grille.

Unit mounting

Open mounting brackets, factory-fitted, made from galvanised steel, 15/10th thick, with check valve for securing the threaded rods during fitting and levelling.

Packaging

- Strapped cardboard crate for the casing.
- Fitting template and direction of assembly printed on the box.
- Visual return/supply air interface supplied separately in protective cardboard packaging.
- Delivered on a plastic-wrapped pallet.

Controls

- RTR-E electromechanical thermostat range.
- V30 electronic range.
- V300 electronic range.
- V3000 networked electronic range (KNX).
- V-LON networked electronic range (LON).

Options (factory-fitted)

- Hydraulic coil with blades protected for use in harmful/corrosive atmospheres (coastal locations, or areas close to chemical industries).

Accessories (available separately)

- 300 mm long flexible connections kit with or without 9 mm insulation.
- self-adjusting fresh air module kit:
  - 15/30/45 m^3/h flow rates,
  - 60/75/90 m^3/h flow rates,
- Ø100/125 mm adapter for fresh air sleeve,
- resilient mounts,
- finish frame for STAFF ceiling,
- fresh air pack:
  - R1: fresh air managed via presence sensor,
  - R+: fresh air management via CO_2 sensor (recommended max. air flow 90 m^3/h; network balancing system not supplied by CIAT).

Dimensions

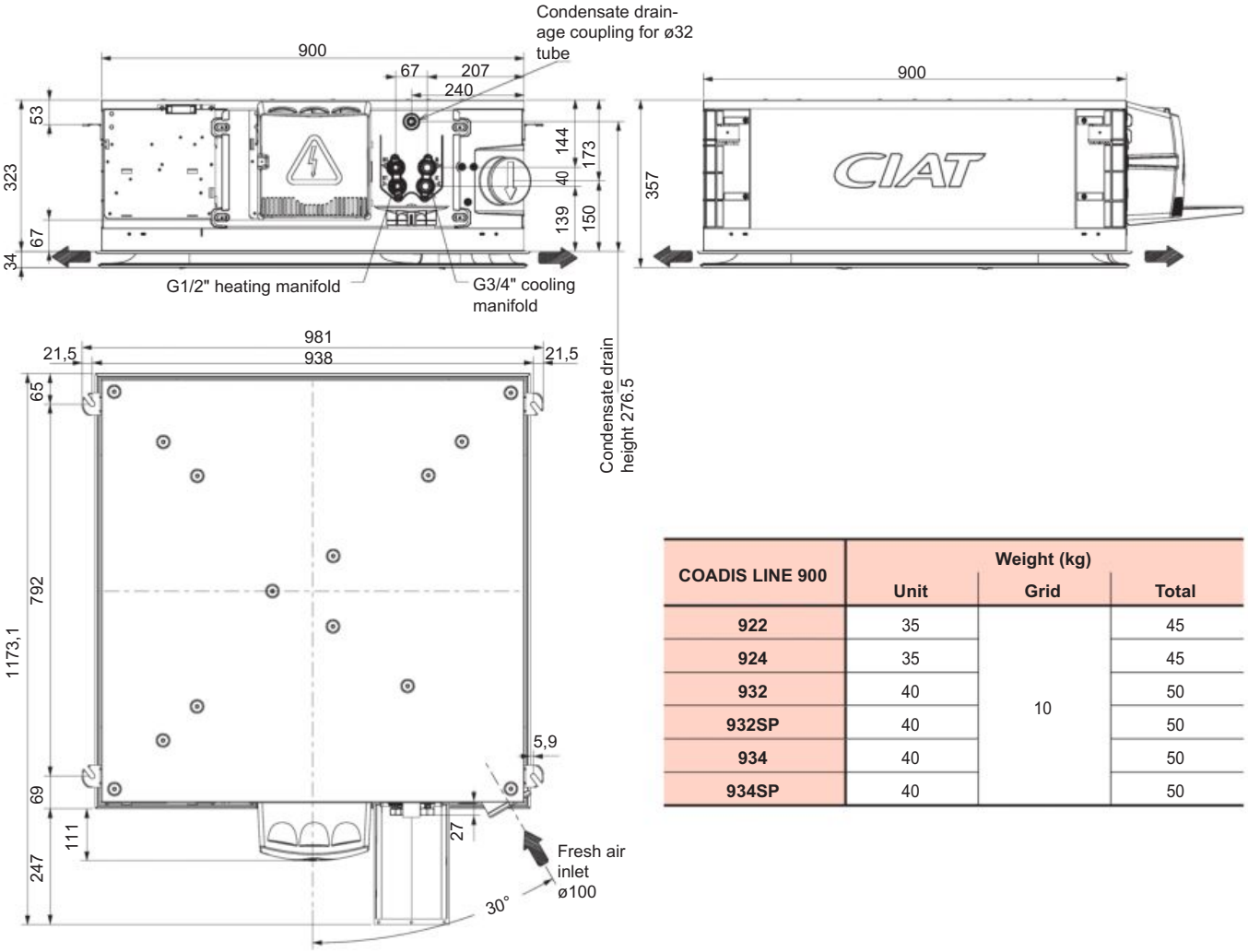

COADIS LINE 900	Weight (kg)		
	Unit	Grid	Total
922	35	10	45
924	35		45
932	40		50
932SP	40		50
934	40		50
934SP	40		50

Coil capacity (L)

Coadis Line 900		922	932	932SP	924	934	934SP
2-tube coil		2,2	3,5	3,5			
4-tube coil	Cold water coil				2,2	3,5	3,5
	Hot water coil				0,6	0,6	0,6

Coil connection diameters

Coil coupling type: flat face swivel nuts with a female thread
Valve outlet coupling type: "male flat face" threaded couplings to be used

Coadis Line		922	932	932SP	924	934	934SP
2-tube system	Hot water or cold water coil	G3/4”	G3/4”	G3/4”			
4-tube system	Cold water coil				G3/4”	G3/4”	G3/4”
	Hot water coil				G1/2”	G1/2”	G1/2”

TECHNICAL CHARACTERISTICS

Motor electrical specifications

COADIS LINE	Motor code	AC asynchronous motor						HEE brushless motor					
		922	932	932SP*	924	934	934SP*	922	932	932SP	924	934	934SP
Input power (W)	V5	102	102	157	102	102	157	51	51	113	51	51	113
	V4	89	89	136	89	89	136	38	38	91	38	38	91
	V3	69	69	119	69	69	119	24	24	72	24	24	72
	V2	53	53	105	53	53	105	15	15	56	15	15	56
	V1	35	35	93	35	35	93	10	10	42	10	10	42
Input current (A)	V5	0,44	0,44	0,68	0,44	0,44	0,68	0,37	0,37	0,39	0,37	0,37	0,39
	V4	0,39	0,39	0,59	0,39	0,39	0,59	0,28	0,28	0,61	0,28	0,28	0,61
	V3	0,30	0,30	0,52	0,30	0,30	0,52	0,20	0,20	0,50	0,20	0,20	0,50
	V2	0,23	0,23	0,46	0,23	0,23	0,46	0,14	0,14	0,39	0,14	0,14	0,39
	V1	0,15	0,15	0,40	0,15	0,15	0,40	0,10	0,10	0,31	0,10	0,10	0,31

Note: Specifications determined for 230V +/-10% - 50Hz supply.
For operation at 60Hz, the power input and rotation speed values are generally higher.

* fan motor assembly not compliant with the ErP2015 Directive
- Motor operating range: minimum return T°C: 0°C
maximum return T°: 40°C

Unit information plate

The name plate contains all the information required to identify the unit and its configuration. This plate is placed on the electrics box side.

❶ Code
❷ Serial number
❸ Description of the unit
❹ Nominal motor output
❺ Motor rotation speed
❻ Coil type
❼ Wiring diagram reference
❽ Motor speed wiring
❾ Maximum operating pressure
❿ Electrical heater specifications (if fitted)

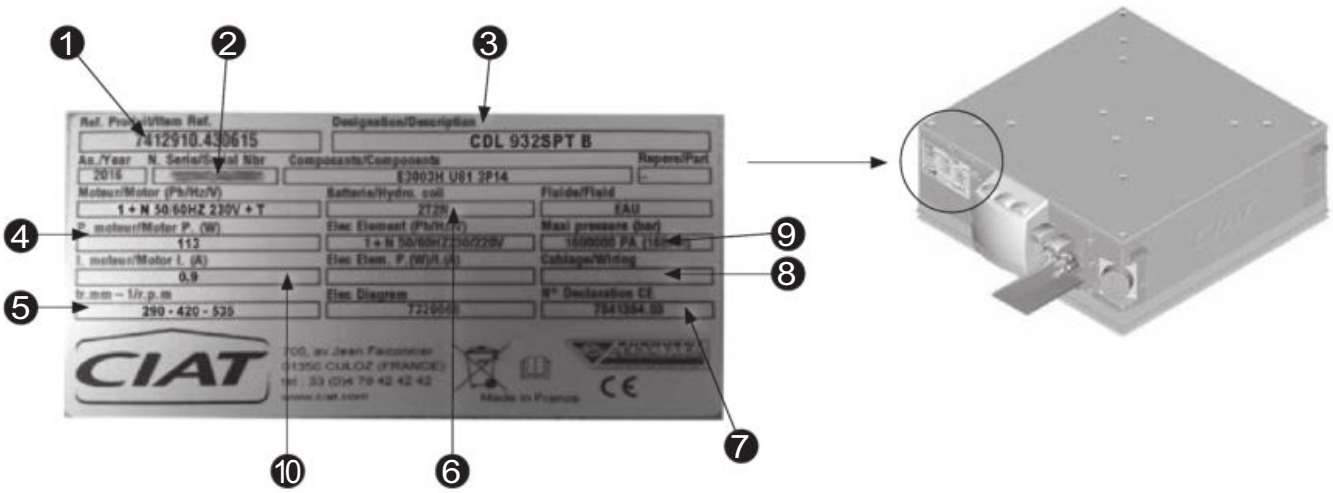

PERFORMANCE

COADIS LINE	Motor code	Air flow m³/h	2-tube system and 4-tube system Cooling capacity (W) Total	Sensible	Heating capacity (W)	Power input W	LW dB (A)	Comfort level (ISO or NR)	Average air temperature rise in K Auxiliary electric heater 230/1/50 2R or 3R	
922	V5	1100	6 165	4 904	6 432	102	51	33	2000 W (2R)	5,4
	V4	990	5 677	4 478	6 012	89	48	31		6,0
	V3	845	5 093	3 983	5 352	69	46	28		7,0
	V2	700	4 403	3 401	4 626	53	42	24		8,5
	V1	550	3 673	2 767	3 825	35	39	20		10,8
932	V5	1090	7 718	5 689	7 408	102	50	33	3000 W (3R)	8,2
	V4	985	7 095	5 194	6 752	89	48	32		9,0
	V3	850	6 225	4 517	5 916	69	44	26		10,5
	V2	710	5 291	3 808	4 996	53	41	22		12,5
	V1	570	4 289	3 066	4 019	35	37	18		15,6
932SP*	V5	1420	9 479	7 182	8 492	157	59	42	3000 W (3R)	6,3
	V4	1325	8 986	6 754	7 907	136	56	39		6,7
	V3	1225	8 460	6 303	7 405	119	54	37		7,3
	V2	1120	7 894	5 833	6 837	105	51	34		8,0
	V1	1020	7 287	5 345	6 338	93	48	32		8,7
924	V5	1100	6 165	4 904	3 581	102	51	33		
	V4	990	5 677	4 478	3 380	89	48	31		
	V3	845	5 093	3 983	3 124	69	46	28		
	V2	700	4 403	3 401	2 826	53	42	24		
	V1	550	3 673	2 767	2 490	35	39	20		
934	V5	1090	7 718	5 689	4 430	102	50	33		
	V4	985	7 095	5 194	4 192	89	48	32		
	V3	850	6 225	4 516	3 838	69	44	26		
	V2	710	5 291	3 808	3 428	53	41	22		
	V1	570	4 289	3 066	2 963	35	37	18		
934SP*	V5	1420	9 479	7 182	4 978	157	59	42		
	V4	1325	8 986	6 753	4 850	136	56	39		
	V3	1225	8 460	6 302	4 690	119	54	37		
	V2	1120	7 894	5 833	4 494	105	51	34		
	V1	1020	7 287	5 345	4 266	93	48	32		

EUROVENT conditions Eurovent certified values

Cooling mode: water temperature: 7/12°C, inlet air temperature: 27°C - 19°C (WB)
Heating temperature (2T): water temperature: 45/40 °C, inlet air temperature: 20 °C
Heating temperature (4T): water temperature: 65/55 °C, inlet air temperature: 20 °C

*: motor not compliant with ErP 2015

PERFORMANCE

COADIS LINE	Voltage V	Air flow m³/h	2-tube system and 4-tube system Cooling capacity (W) Total	Cooling capacity (W) Sensible	Heating capacity (W)	Power input W	LW dB (A)	Comfort level (ISO or NR)	Average air temperature rise in K Auxiliary electric heater 230/1/50 2R or 3R	
922 HEE	7,1	1100	6 125	4 860	6 472	52	51	33	2000 W (2R)	5,4
	6,1	990	5 635	4 434	6 054	38	48	31		6,0
	5	845	5 055	3 943	5 390	25	46	28		7,0
	3,9	700	4 368	3 365	4 659	15	42	24		8,5
	2,7	550	3 649	2 742	3 848	10	39	20		10,8
932 HEE	7,1	1090	7 669	5 639	7 454	52	50	33	3000 W (3R)	8,2
	6,2	985	7 045	5 144	6 798	38	48	32		9,0
	5	850	6 179	4 472	5 957	25	44	26		10,5
	3,9	710	5 251	3 770	5 030	16	41	22		12,5
	2,7	570	4 262	3 040	4 042	10	37	18		15,6
932SP HEE	9,1	1320	8 945	6 711	7 943	92	56	39	3000 W (3R)	6,8
	8,2	1225	8 416	6 257	7 442	72	53	37		7,3
	7,3	1120	7 847	5 785	6 877	56	51	34		8,0
	6,5	1020	7 237	5 295	6 380	42	50	32		8,7
	3,6	660	4 960	3 650	4 700	14	39	21		13,5
924 HEE	5	845	5 055	3 943	3 136	25	46	28		
	3,9	700	4 368	3 365	2 838	15	42	24		
	3,1	600	3 900	2 970	2 620	11	40	22		
	2,7	550	3 649	2 742	2 499	10	39	20		
	2	450	3 090	2 240	2 230	9	37	19		
934 HEE	7,1	1090	7 669	5 639	4 446	52	50	33		
	6,2	985	7 045	5 144	4 209	38	47	32		
	5	850	6 179	4 472	3 854	25	44	26		
	3,9	710	5 251	3 770	3 442	16	40	22		
	2,7	570	4 262	3 040	2 973	10	37	18		
934SP HEE	9,1	1320	8 945	6 711	4 863	92	56	42		
	8,2	1225	8 416	6 257	4 704	72	53	39		
	7,3	1120	7 847	5 785	4 509	56	51	37		
	6,5	1020	7 237	5 295	4 283	42	50	34		
	3,6	660	4 960	3 650	3 342	14	39	32		

EUROVENT conditions Eurovent certified values

Cooling mode: water temperature: 7/12°C, inlet air temperature: 27°C - 19°C (WB)
Heating temperature (2T): water temperature: 45/40 °C, inlet air temperature: 20 °C
Heating temperature (4T): water temperature: 65/55 °C, inlet air temperature: 20 °C

MELODY2

Cassettes

Perfectly integrated,

the cassettes adapt to

aesthetic, financial

and material constraints

Rated cooling capacity: 1.5 to 8.7 kW

Rated heating capacity: 1.3 to 11.6 kW

Use

The **MELODY 2** cassette is a non-independent air handling terminal unit installed in suspended ceilings, which combines low cost installation and the operating advantages of central hot/chilled water production with individual temperature controls in each room.

Range

The MELODY2 range of cassette type fan coil units comprises 6 sizes which cover flow rates from 360 to 1450 m^3/h and meet the most stringent sound level requirements.

2 models:

- Compact cassette 600 x 600, type 61 - 62 - 63.
- Large cassette 900 x 900, type 92 - 93 - 94.

MELODY 2 cassettes are available in 3 versions:

- A 2-tube system, with heating or cooling mode.
- A 2-tube + 2-wire system, with cooling + electric heating or heating/cooling + electric heating.
- A 4-tube system, with heating and cooling mode.

The MELODY 2 cassettes are available either with a 3-speed AC motor or a variable speed EC motor that meet the new building energy performance objectives.

Operating principle

The fan takes the air from the room through a grille.

Filtered to be purified, dehumidified, heated or cooled through a chilled or hot water exchanger coil, this air is then discharged into the room to be air conditioned through 4 swivel blades so as to obtain a maximum increase of the air stream and ensure the diffusion by Coanda effect.

335

TECHNICAL DESCRIPTION

Return/supply air grille

- Fits perfectly within the suspended ceiling tile dimensions.
- Diffuser colour: Grille and frame: pure white (RAL 9010) and deflectors: signal white (RAL 9003).
- The manual deflectors are adjustable (2 positions) allowing air diffusion throughout the room.

Water coil (2-tube or 4-tube system)

- Galvanised steel sheet.
- Copper tubes, aluminium fins.
- Partial draining and air bleed valve.
- Rated pressure: 14 bar.
- Minimum water inlet temperature: 5 °C.
- Maximum water inlet temperature: 70 °C in 2-tube systems and 80 °C in 4-tube systems.

Electrical heater (2-tube system + electric mode)

- Heating element, stainless steel tubes, inserted in the finned block.
- 2 temperature limiter thermostats (1 auto + 1 manual).

Condensate drain pan

- A condensate drain pan in expanded polystyrene, covered with a waterproof film.
- Recovery is provided by a drain pump equipped with a safety float and mounted on anti-vibration mounts.
- The auxiliary pan is supplied as a standard accessory to recover the valve condensates.

Fan motor assembly

■ AC motor

3-speed motor

- Closed type, with protected shaft.
- Permanent capacitor in the electrics box.
- Automatic heat protection with opening as standard.
- Resilient mounts.
- 230 V-50/60 Hz single-phase power supply.
- Reduced consumption.

■ HEE motor

0 -10 V variable speed motor

- Brushless alternating current (BLAC) technology offering more linear torque progression and a lower operating sound level than brushless direct current (BLDC) motors.
- Sealed, tropicalised with protected well.
- Ball bearings.
- Internal automatic overload protection on the winding as standard.
- Resilient mounts.
- 230 V - 50/60 Hz single-phase power supply.

■ Fan

- Balanced centrifugal impeller with airfoil blades.
- Polymer impeller.

Air filter

- Located on the detachable grille, easy to remove without dismantling.
- Washable polypropylene filter, with efficiency class EU1 (EN13779).

Casing

- Galvanised steel sheet.
- Thermal and acoustic insulation of the internal surfaces.
- Pre-cut (Ø 70 mm for size 600 and Ø 100 for size 900). Pre-cut Ø 150 mm on the side for supply air into the adjacent room.

Electrics box

- Large ABS electrics box with a hinge to keep it open and screw closure.
- IP20 Index of Protection.
- Terminal block on DIN rail in accordance with EN 50022, 7.5 mm deep.
- Junction block located with tension clamp. Cross section 0.5 to 2.5 mm².
- Cable routing for customer connections.

Accessories (available separately)

- Resilient mounts.
- 2-way or 3-way valve kit with bypass and 230 V on/off actuator.
- 2-way or 3-way valve kit with bypass and 24 V 3-point actuator.
- RTR-E & V30 thermostat (AC version only).
- V300 and V3000 control unit kit.

Dimensions

Size 600

Unit without valves

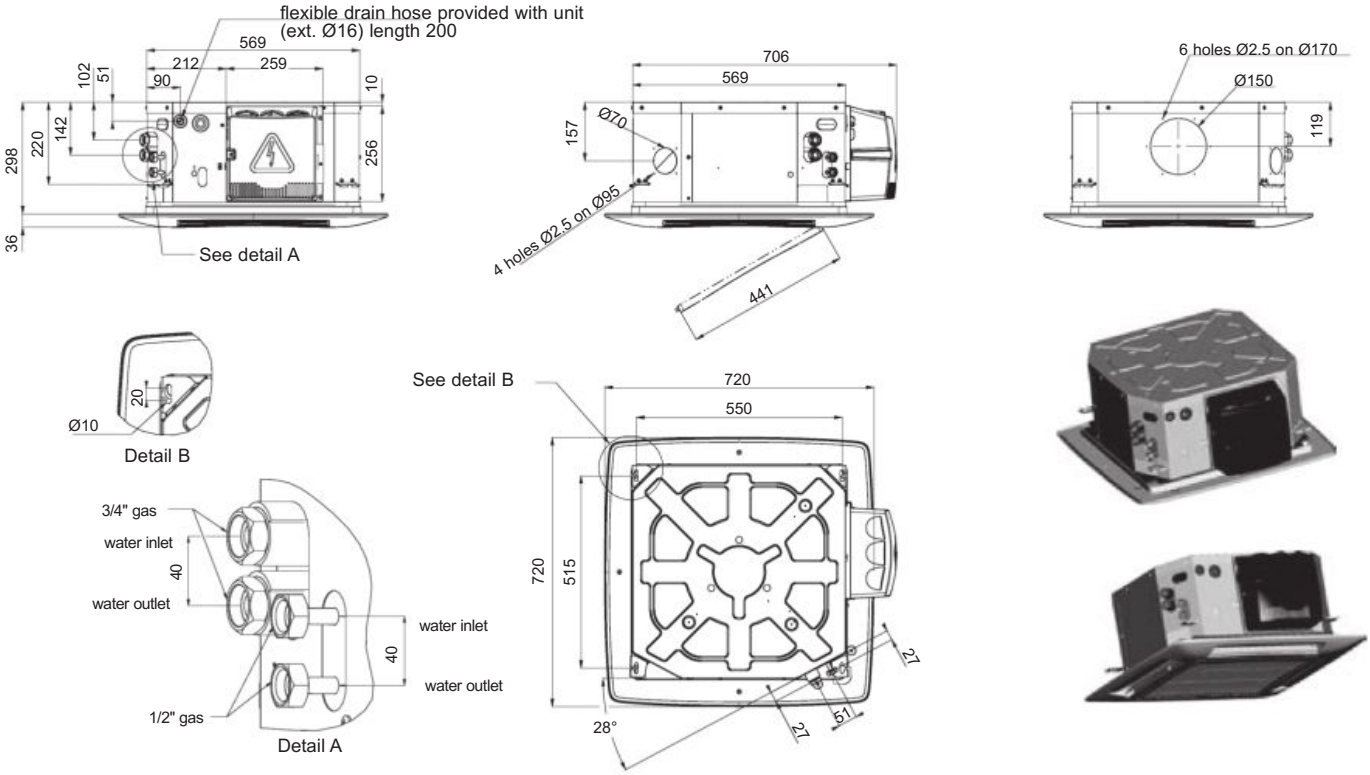

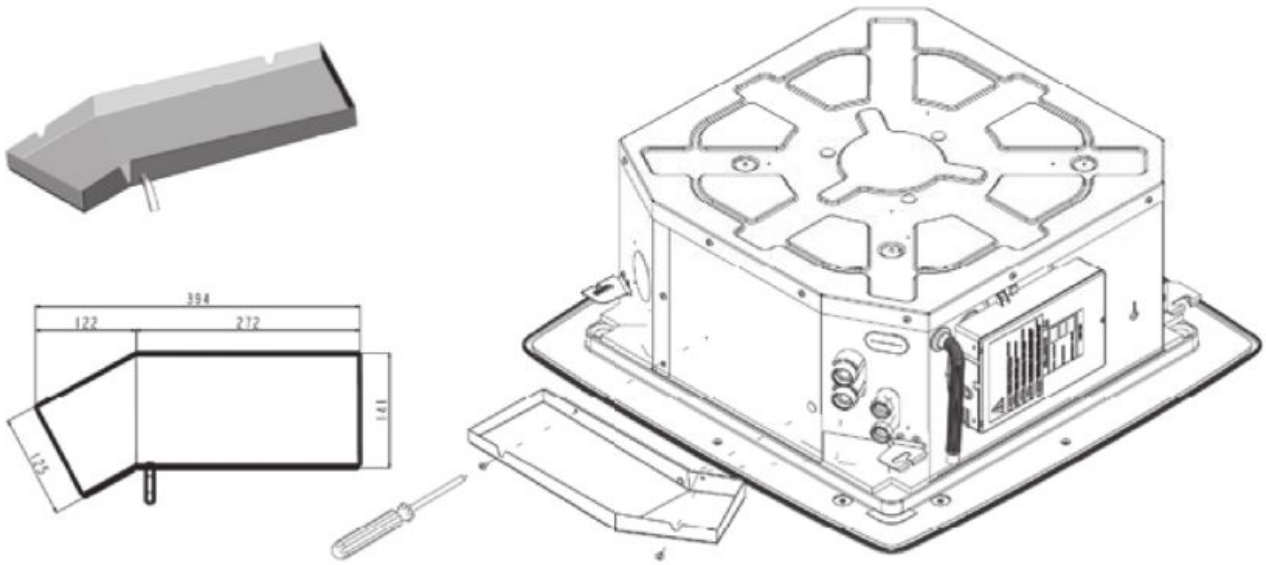

4

337

Size 900

Unit without valves

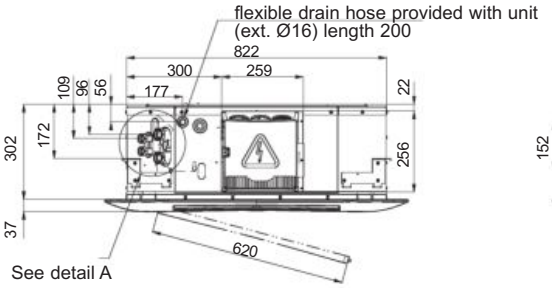

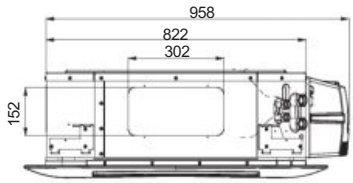

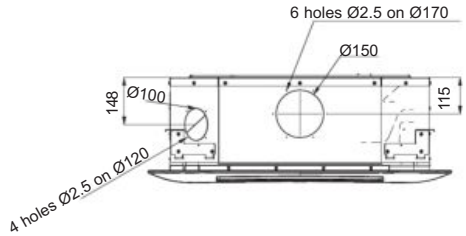

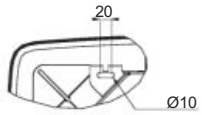

Detail B

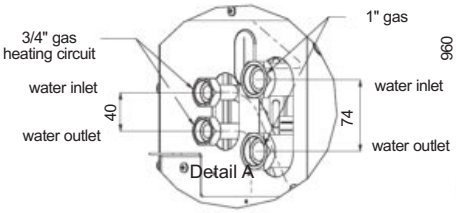

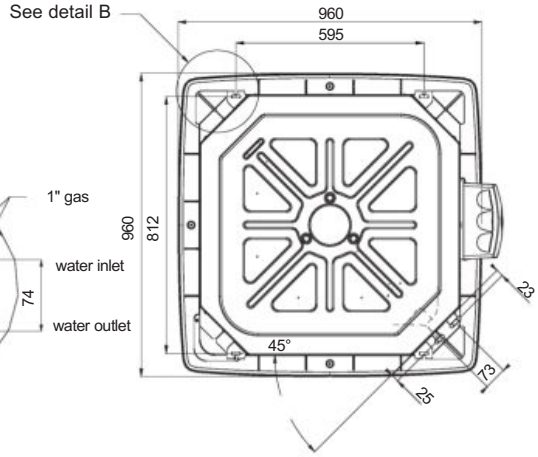

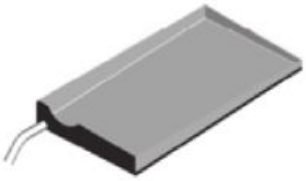

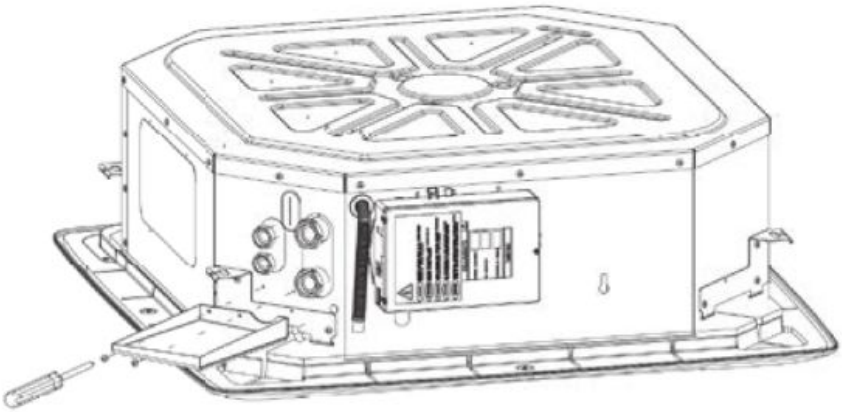

AC MOTOR PERFORMANCE

2-tube

Size	Speeds	Air flow rate m³/h	Heating capacity W	Pressure drop (heating) kPa	Cooling capacity		Pressure drop (cooling) kPa	Sound power level Lw dB(A)	Sound pressure level LP * dB(A)	NR *
					Total W	Sensible W				
61 AC	1	660	2 740	12	2 330	1 950	11	49	40	36
	2	450	2 170	8	1 740	1 460	7	41	32	28
	3	360	1 920	7	1 530	1 280	6	37	28	25
62 AC	1	735	3 680	13	3 960	3 010	15	53	44	40
	2	505	3 150	10	2 860	2 161	9	47	35	31
	3	320	1 940	5	1 860	1 410	5	35	26	20
63 AC	1	900	5 280	19	4 640	3 570	20	57	48	43
	2	625	3 920	12	3 460	2 640	12	48	39	34
	3	485	3 160	8	2 770	2 110	8	42	33	28
92 AC	1	980	6 840	23	6 030	4 680	24	49	40	35
	2	720	5 080	14	4 410	3 440	13	40	31	26
	3	530	3 800	9	3 330	2 580	8	35	26	21
93 AC	1	1160	8 510	15	7 130	5 370	12	54	45	40
	2	825	6 260	10	5 430	4 030	8	46	37	32
	3	500	3 850	5	3 680	2 660	5	38	29	22
94 AC	1	1450	10 280	18	8 540	6 400	22	59	50	45
	2	1080	7 950	11	6 430	4 810	13	52	43	38
	3	600	4 380	5	4 020	2 950	6	40	31	25

4-tube

Sizes	Speeds	Air flow rate m³/h	Heating capacity W	Pressure drop (heating) kPa	Cooling capacity		Pressure drop (cooling) kPa	Sound power level Lw dB(A)	Sound pressure level LP * dB(A)	NR *
					Total W	Sensible W				
61 AC	1	660	1 670	30	1 970	1 840	15	49	40	36
	2	450	1 270	19	1 490	1 370	9	41	32	28
	3	360	1 090	15	1 340	1 180	8	36	28	25
62 AC	1	735	5 460	21	3 340	2 620	13	53	44	40
	2	505	4 400	15	2 670	2 050	9	47	35	31
	3	320	3 100	9	1 980	1 490	6	35	26	20
63 AC	1	900	5 800	24	3 950	3250	17	57	48	43
	2	625	5 000	19	3 180	2 550	11	48	39	34
	3	485	4 320	15	2 530	2 040	8	42	33	28
93 AC	1	1160	10 040	12	6 580	5 080	25	54	45	40
	2	825	7 790	8	4 930	3 780	15	46	37	32
	3	500	5 280	5	2 960	2 310	7	38	29	22
94 AC	1	1450	12 770	18	7 490	5890	32	59	50	45
	2	1080	10 070	12	5 970	4 640	22	52	43	38
	3	600	6 430	7	3 140	2 530	7	40	31	25

EUROVENT conditions
Cooling mode: (2-tube & 4-tube): inlet air temperature: 27 °C/19 °C WB, inlet/outlet water temperature: 7 °C/12 °C
Heating mode: (2-tube): inlet air temperature: 20 °C, inlet/outlet water temperature: 45 °C/40 °C
Heating mode: (4-tube): inlet air temperature: 20 °C, inlet/outlet water temperature: 65 °C/55 °C
*Sound pressure level and noise rating values are based on a hypothetical sound attenuation of the room of 9 dB(A).

339

EC MOTOR PERFORMANCE

2-tube

Size	Voltage V	Air flow rate m³/h	Heating capacity W	Pressure drop (heating) kPa	Cooling capacity		Pressure drop (cooling) kPa	Sound power level Lw dB(A)	Sound pressure level LP * dB(A)	NR *
					Total W	Sensible W				
61 EC	10	660	2 740	12	2 360	1 980	11	49	40	35
	6	450	2 170	8	1 770	1 490	7	40	31	27
	2	360	1 920	7	1 540	1 290	6	36	27	23
62 EC	10	735	3 680	13	3 960	3 010	15	53	44	40
	6	505	3 150	10	2 860	2 161	9	44	35	31
	2	320	1 940	5	1 860	1 410	5	35	26	20
63 EC	10	900	5 280	19	4 640	3 570	20	57	48	43
	6	625	3 920	12	3 460	2 640	12	48	39	34
	2	485	3 160	8	2 770	2 110	8	42	33	28
92 EC	10	980	6 840	23	6 030	4 680	24	49	40	35
	6	720	5 080	14	4 410	3 440	13	40	31	26
	2	530	3 800	9	3 330	2 580	8	35	26	21
93 EC	10	1160	8 510	15	7 130	5 370	12	54	45	40
	6	825	6 260	10	5 430	4 030	8	46	37	32
	2	500	3 850	5	3 680	2 660	5	38	29	22
94 EC	10	1600	11 030	31	18	7 160	27	61	52	47
	6	1080	7 950	11	6 490	4 860	13	52	43	38
	2	600	4 380	7	4 050	2 980	6	40	31	25

4-tube

Sizes	Voltage V	Air flow rate m³/h	Heating capacity W	Pressure drop (heating) kPa	Cooling capacity		Pressure drop (cooling) kPa	Sound power level Lw dB(A)	Sound pressure level LP * dB(A)	NR *
					Total W	Sensible W				
61 EC	10	660	1 670	30	1 970	1 840	15	49	40	36
	6	450	1 270	19	1 490	1 370	9	41	32	28
	2	360	1 090	15	1 340	1 180	8	36	28	25
62 EC	10	735	5 460	21	3 340	2 620	13	53	44	40
	6	505	4 400	15	2 670	2 050	9	47	35	31
	2	320	3 100	9	1 980	1 490	6	35	26	20
63 EC	10	900	5 800	24	3 950	3250	17	57	48	43
	6	625	5 000	19	3 180	2 550	11	48	39	34
	2	485	4 320	15	2 530	2 040	8	42	33	28
93 EC	10	1160	10 040	12	6 580	5 080	25	54	45	40
	6	825	7 790	8	4 930	3 780	15	46	37	32
	2	500	5 280	5	2 960	2 310	7	38	29	22
94 EC	10	1600	14 000	20	7 910	6 280	34	61	52	47
	6	1080	10 070	12	6 020	4 640	22	52	43	38
	2	600	6 430	7	3 140	2 530	7	40	31	25

EUROVENT conditions
Cooling mode: (2-tube & 4-tube): inlet air temperature: 27 °C/19 °C WB, inlet/outlet water temperature: 7 °C/12 °C
Heating mode: (2-tube): inlet air temperature: 20 °C, inlet/outlet water temperature: 45 °C/40 °C
Heating mode: (4-tube): inlet air temperature: 20 °C, inlet/outlet water temperature: 65 °C/55 °C
*Sound pressure level and noise rating values are based on a hypothetical sound attenuation of the room of 9 dB(A).

TECHNICAL AND ELECTRICAL CHARACTERISTICS

Coil capacity (litres)

		61	62	63	92	93	94
Standard 2-tube system coil		0.55	1.1	1.1	1.6	2.4	2.4
4-tube coil	Cooling	0.4	1.1	1.1		2.4	2.4
	Heating	0.1	0.6	0.6		1.2	1.2

Coil connection diameter

		61	62	63	92	93	94
Standard 2-tube coil		G 3/4"	G 3/4"	G 3/4"	G 1"	G 1"	G 1"
4-tube coil	Cooling	G 3/4"	G 3/4"	G 3/4"		G 1"	G 1"
	Heating	G 1/2"	G 1/2"	G 1/2"		G 3/4"	G 3/4"

Electrical characteristics * (230 V - 50 Hz / 60 Hz single-phase) – AC fan motor

	Speed	61 AC	62 AC	63 AC	92 AC	93 AC	94 AC
Power input (W)	1	58	58	99	66	88	125
	2	35	34	58	41	61	92
	3	25	17	38	28	34	44
Absorbed current (A)	1	0.27	0.24	0.41	0.3	0.46	0.63
	2	0.17	0.14	0.24	0.17	0.27	0.41
	3	0.12	0.07	0.16	0.12	0.14	0.19

Electrical characteristics * (230 V - 50 Hz / 60 Hz single-phase) – HEE fan motor

	Speed	61 EC	62 EC	63 EC	92 EC	93 EC	94 EC
Power input (W)	2V	29	33	57	25	45	115
	6V	13	14	23	12	23	40
	10V	9	7	13	7	9	11
Absorbed current (A)	2V	0.19	0.27	0.46	0.23	0.4	0.89
	6V	0.1	0.13	0.2	0.12	0.22	0.35
	10V	0.08	0.08	0.12	0.08	0.1	0.12

* Specifications determined for a 230 V +/- 10% - 50 Hz power supply. For operation at 60 Hz, the power input and rotation speed values are generally higher.

Electrical characteristics (240 V - 50 Hz single-phase) – electrical heater

	61	62	63	92	93	94
Electrical power	1500	2500	2500	3000	3000	3000
Absorbed current (A)	6,3	10,4	10,4	12,5	12,5	12,5

Dimensions and weights

	61	62	63	92	93	94
Dimensions** (H x L x D) mm	298 x 706 x 706			302 x 958 x 958		
Grille dimensions (H x L x D)	36 x 720 x 720	36 x 720 x 720	36 x 720 x 720	37 x 960 x 960	37 x 960 x 960	37 x 960 x 960
Weight unit/grille weight	14.8/3	16.5/3	16.5/3	37/5	39.6/5	39.6/5

** With electrics box and without valves

341

Air throw (in metres)

MELODY2	Louvres all open		
	High speed	Medium speed	Low speed
61	3.8	3.2	2.7
62	4.0	3.4	2.8
63	4.8	4.1	3.4
92	3.0	2.6	2.1
93	3.4	2.9	2.4
94	4.3	3.7	3.0

Notes:

1. The deflectors were adjusted to use the Coanda effect to obtain an air flow pattern that adheres as closely as possible and parallel to the ceiling.
2. The air throw is defined as the distance at which the air flow speed falls to 0.2 m/s, when the air flow leaves the unit parallel to the ceiling.
3. The values are to be considered as indicative, as they may vary according to the type of ceiling, room dimensions and even the furniture used.

Operating limits

Water circuit	**Maximum water-side pressure: 1400 kPa (142 mWG)**	**Minimum inlet water temperature: 5 °C**
		Maximum inlet water temperature: 80 °C
Indoor temperature		**Minimum temperature: 5 °C**
		Maximum temperature: 32 °C for units with electric heaters
Power supply	**Nominal operating limits**	**230 V - 50/60 Hz single-phase**
		Min. 207 - Max 253 V for units without electric heaters
		Min. 216 - Max 244 V for units with electric heaters

MAJOR LINE

Comfort units

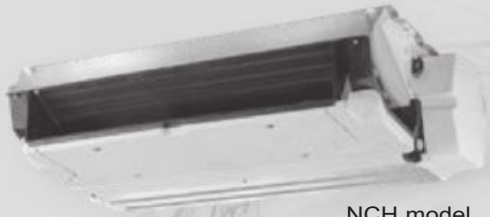

NCH model

CV model

Versatile

unit meeting all building-specific constraints

Energy and ecodesign performance.

Improved occupant comfort, very low sound level

Innovative design ensuring easy installation and simplified maintenance

New coils with patented fins,
New size designations.

MAJOR LINE

Designed for heating and cooling, **MAJOR LINE** is available in 4 models (cased or uncased, horizontal or vertical).

The versatility of MAJOR LINE, thanks to its different assembly options and range of accessories, means it can be adapted to any type of installation.

In Europe, it has become a benchmark solution for renovations of large office blocks and hotel chains and restoration of buildings, etc.

Modern aesthetic lines, excellent sound levels and optimised thermal performance. With MAJOR LINE, CIAT offers a comfort solution which is both economical and quick to set up.

INNOVATIVE DESIGN

A true stylistic evolution, MAJOR LINE has distinguished lines with a slim and elegant shape. Its attractive and modern design will blend perfectly with all types of interior.

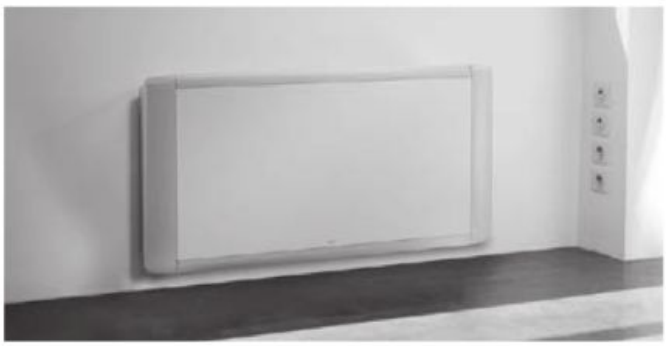

4

343

Versatility of the models

Two versions:
- Cased (visible)
- Uncased (flush-mounted)

➔ The same product reference for both applications: CV (Cased Vertical)/CH (Cased Horizontal).

➔ The same product reference for both applications: NCV (Uncased Vertical)/NCH (Uncased Horizontal).

Units with left/right hydraulic connections available for easier adaptation to refurbished buildings.

Cased or Uncased models available with classic air return (assemblies 1, 41, 1V and 41V) and front mounted air return (assemblies 1D, 41D, 1VD and 41VD).

A large selection of accessories available in:
➔ Fresh air and mixed
➔ Diffusion and return air

For NCH, the hydraulic and electrical connections can be supplied on the same side making the unit more compact and simplifying installation.

Unit operates with 50 and 60 Hz supply.

Innovative design

- New shaped ABS volute designed to optimise output and performance.
- 160 mm HEE (High Energy Efficiency) impeller, with CIAT exclusive airfoil blades in self-extinguishable HB ABS.

Shaped ABS volute

- Hydraulic coil with total frontal surface increased from 5 to 15% (according to the size and in relation to the units of previous ranges) for improved performance and output .

Exploded view of NCV model

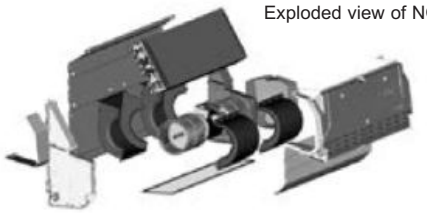

Simple to install and maintain

- Filter easily accessible.
- Single unit casing easily removed with two screws in the lower part of the unit.
- Option of replacing only the faulty component on the fan motor assembly: only the motor or the impeller.

- All the speeds are connected to the electrical terminal of the unit and are easily accessible on site for customised adjustment.
- No plastic moving parts on the casing (hinged access hatch for example) for increased durability of the unit over time.

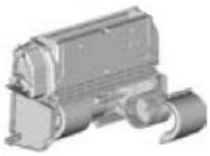

Latest generation of comfort

- Improved control of the supply air temperature to reduce discomfort.
- Diffusion grille optimised in our Research & Innovation Centre for increased overall comfort in accordance with the most demanding standards.

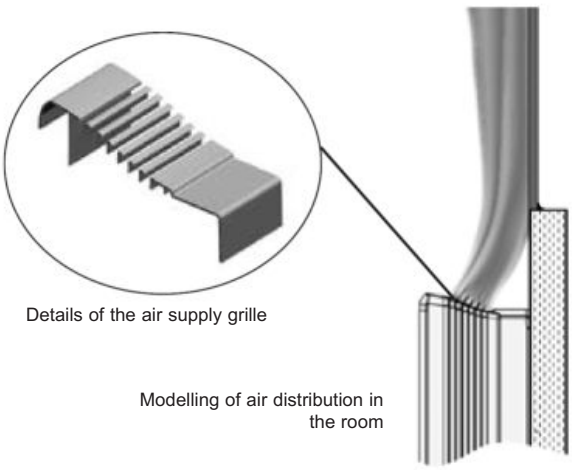

Details of the air supply grille

Modelling of air distribution in the room

Acoustic performance (MV trend line)

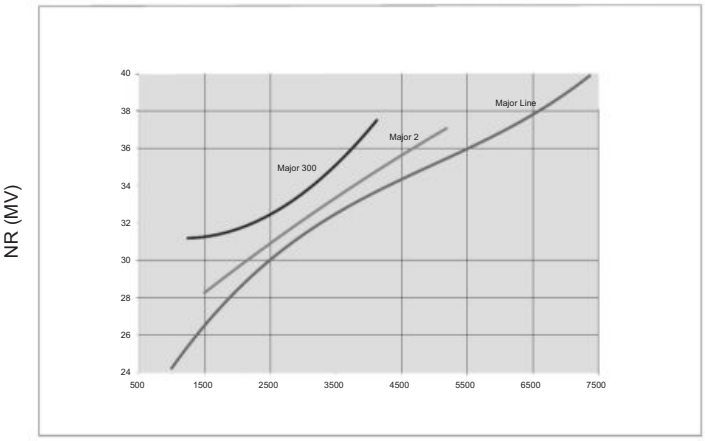

Morpho codes - Major Line description

Range	Size	Model	Installation	Coil type	Connector	Thermal function		Motor	Speeds	Filter
MJL	10 2A	CV	1	2T2F	G	F	+ 500W	HEE	depending on selection	G3

HEE 2-10V	Energy efficient motor, 2-10 V control
HEE ON/OFF	Energy efficient motor, 3-speed control
AC	5-speed asynchronous motor

10	300 W or 600 W
20	500 W or 1000 W
30	800 W or 1600 W
40	1200 W or 2400 W
50	1600 W or 3200 W
60	Not available

F	Cooling
C	Heating
CF	Heating/Cooling

G	Left, facing air supply
D	Right, facing air supply

2T	2 pipes
2T2F	2-pipe + wiring
4T	4 pipes

1	Return underneath CV
1D	Front-mounted return CV
41	Rear-mounted return CH
41D	Return underneath CH
1V	Return underneath NCV
1VD	Front-mounted return NCV
41V	Rear-mounted return NCH
41VD	Return underneath NCH

CV	Cased Vertical model
CH	Cased Horizontal model
NCV	Uncased Vertical model
NCH	Uncased Horizontal model
NCH Y	Y Uncased Horizontal model with supply plenum (plenum delivered not fitted)
NCH H	Horizontal uncased model with supply & return plenum
NCH U	Horizontal uncased model with supply & return plenum

2J	2-pipe 1.5-row version (+ possible wiring)
2K	2-pipe 2-row version
2M	2-pipe 2.5-row version (+ possible wiring)
2N	2-pipe 3-row version
4P	4-pipe, 2.5-row version (cooling) +0.5 row version (heating)
4R	4-pipe, 1-row version (cooling) + 2 row version (heating)

10	Size
20	
30	
40	
50	
60	

MJL	Major Line

4

TECHNICAL DESCRIPTION

Casing
- Single-unit casing and side members in ABS
- Front/rear panel in galvanised steel with mounting holes for easy fixing.

Casing for CV/CH model
Bi-material casing in two colours:
- Flange, side member and supply air grille in RAL 7035 grey ABS
- Front pressed metal panel painted RAL 9010 white and front mounted return air grille (1D, 41D) in RAL 7035 grey
- Central access point for housing the built-in thermostats

Water coil
- High performance coil concept
- Coil casing in galvanised panels.
- Copper pipes, aluminium louvre or non-louvre fins, patented.
- Water coil tap on the left or right of the unit from the front of the supply air (to be specified when ordering).
- 2 or 4-pipe main coil fitted with ½" or ¾" rotary couplings with air purge and drain screw.
- Additional coil for 4 pipes fitted with .½" rotary couplings with 40 mm centre-to-centre distance.
- Nominal pressure of 16 bar (at 20°C)
- Test pressure 18 bar.
- Maximum hot water inlet temperature:
  - 4-pipe application: 90°C
  - 2-pipe application: 90°C
  - 2-pipe/2-wire application: 55°C (min. air flow: 200 m^3/h)

Electric heater
- Single pipe 230V single phase 50/60 Hz electrical elements inserted into the aluminium housing.
- Two capillary tube temperature limiters with manual and automatic reset inserted in the aluminium housing.

Condensate drain pan
- Pan in ABS PC 10% fibreglass with M1 class reinforced EPS insulation (20 mm thick).
- Reinforced insulation for all climates, M1 class EPS panel (20 mm thick).
- ABS auxiliary pan.
- 22 mm external Ø raised condensate outlet.

Fan motor assembly

■ Fan(s)
Impeller(s) in ABS in split units for total accessibility of the different parts of the fan motor assembly.
160 mm HEE impeller(s), with CIAT exclusive airfoil blades in self-extinguishable HB ABS.

■ HEE motor
High energy efficiency motor enabling a reduction of up to 85% in electricity consumption.
- Brushless technology.
- Sealed type, tropicalised with protected shaft.
- Progressive control with 0-10V control signal.
- Internal normally closed series automatic overload protection on the windings.
- Mounted on anti-vibration mounts.
- Supply 230V±10%/1-Ph/50-60 Hz.
- optional:
  - 3-speed on/off output motor actuation
  - "DFS" motor fault output using a photocoupler for potential alarm feedback via a KNX protocol communication bus. (via V3000 controller)

Note: The minimum voltage to start up the motor is 2V.

■ Asynchronous motor
- 5 factory-fitted wired speeds (connected and available at the terminal) for customised adjustment.
- Sealed, tropicalised type, class F with protected shaft.
- Permanent capacitor.
- Ball bearings.
- Automatic overload protection as standard on winding.
- Resilient mounts.
- 230V single-phase 50/60 Hz power supply, reduced consumption.

Electrics box
- Box incorporated on the side of the base opposite the hydraulics.
- Fully encased in an enclosure in PP 20% Talc.
- Electrical connection terminal on DIN rail in compliance with EN 50022, 7.5 mm deep.
- Wire clamps for customer connection.

Air filter
- Flexible filter medium made of regenerative polyester fibre, on rigid frame.
- Efficiency class EN 779: G3.
- Fire rating: M1.
- Mounted on pivoting runners for easy maintenance

Packaging
- Delivered in individual boxes on pallets protected by stretch wrap film.

Controls
- RTR-E electromechanical thermostat range.
- V30 electronic range.
- V300 electronic range.
- Networked electronic range (KNX): V3000.
- Networked electronic range (LON): V-LON2.

Factory-fitted options
- Condensate drain pump.
- Rectangular supply air sleeve for direct distribution in soffit.
- Supply and return air plenum for H and U assembly (contact us) for sizes 2 to 4.
- Electrics box on hydraulic side for NCH models only.
- Hydraulic coil with blades protected for use in harmful/corrosive atmospheres (coastal locations, or areas close to chemical industries).
- Unit without electrics box, or DIN Rail ("bare wire option")

Accessories supplied separately
- Support feet or base
- Return air grille between feet
- Rear skirting support and rear painted panel
- Internal/external air recovery unit
- Single- or dual-deflection diffusion grille
- Diffusion kit with round duct
- Supply air plenum kit for sizes 1 to 6
- Condensate drain pump kit
- Elastic bushings
- Smooth sleeve or Ø 100 mm MR Module
- Hose or tube kit with or without insulation
- 2-way or 3-way valve kit with 230V on/off bypass

Note: refer to the technical manual and the instruction manual for more information.

Assembly and dimensions – CV Model (Cased Vertical)

Assembly 1D: Unit with return on front

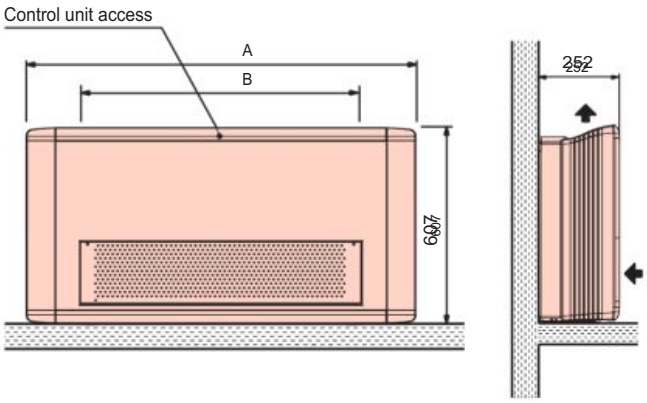

Assembly 1: Basic unit with return underneath

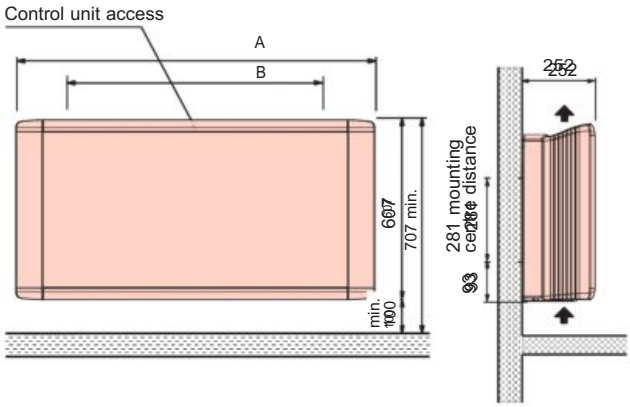

Assembly 2: Basic unit with feet

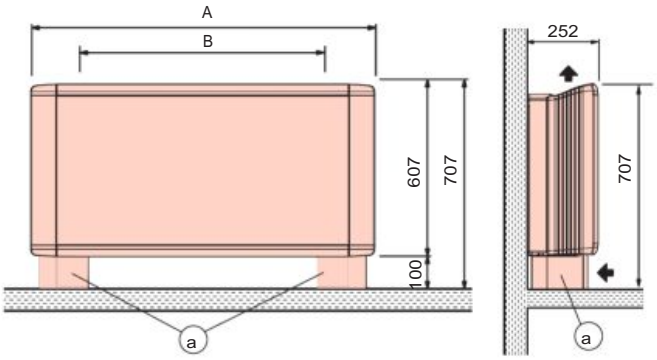

Options available with assembly 2:

- Base mounted grille

- Rear painted panel

- Rear skirting support

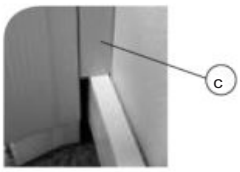

Accessories for assembly configurations (supplied separately)

a: Support feet
b: Aluminium return air grille between feet
c: Painted rear skirting support
j: Rear painted panel RAL 7035

Sizes MAJOR LINE	A	B mounting centre distance	Weight (kg) *	
			Assembly 1/ 1D	Assembly 2
10	840	505	20	21
20	1000	665	23	24
30	1200	865	28	29
40	1400	1065	34	35
50	1600	1265	39	40
60	1800	1465	44	45

* Weight of the unit in 4-pipe version (without valves)

4

347

Assembly and dimensions – CV Model (Cased Vertical)

Assemblies 5 and 6:

Basic unit equipped with a manual pretreated air/recycled air mixing unit with a return air grille and a damper regulating the pretreated air intake.

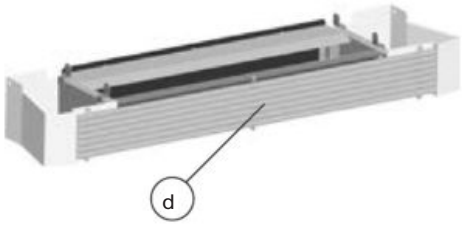

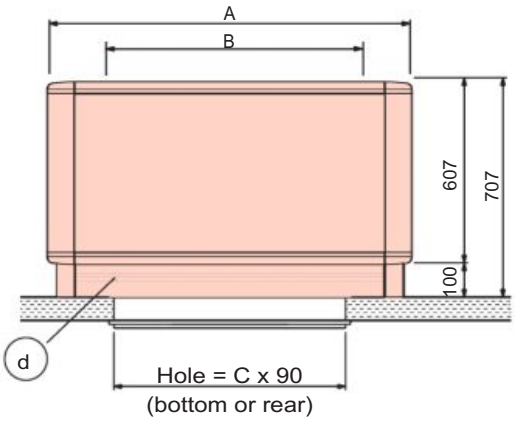

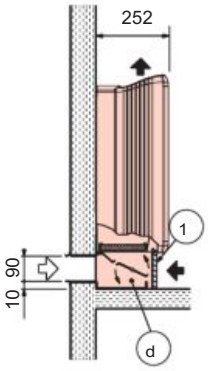

Assembly 5

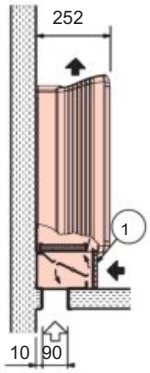

Assembly 6

⇨ Air pretreated by an air handling unit

Accessories for assembly configurations (supplied separately)

d: Manually controlled int./ext. air recovery unit with return air grille (1) for filter removal

Sizes MAJOR LINE	A	B mounting centre distance	C hole space	Weight (kg) *
10	840	505	430	24
20	1000	665	430	28
30	1200	865	780	32
40	1400	1065	780	40
50	1600	1265	1180	45
60	1800	1465	1180	50

* Weight of the unit in 4-pipe version (without valves)

Assembly and dimensions – CH Model (Cased Horizontal)

Assembly 41D: Unit with return on front

Mounting: 4 sealed M6 shafts, nuts and washers (not supplied)

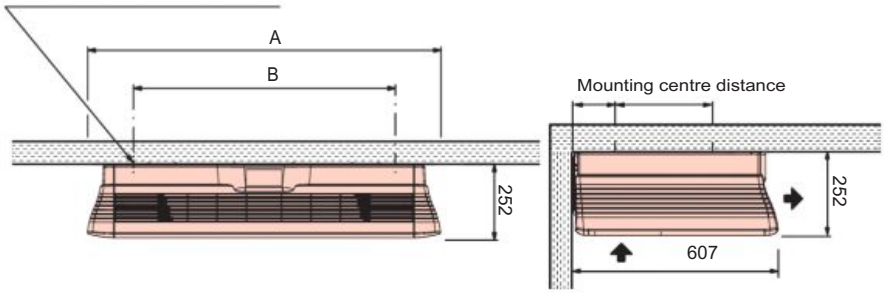

Assembly 41: Basic unit

Mounting: 4 sealed M6 shafts, nuts and washers (not supplied)

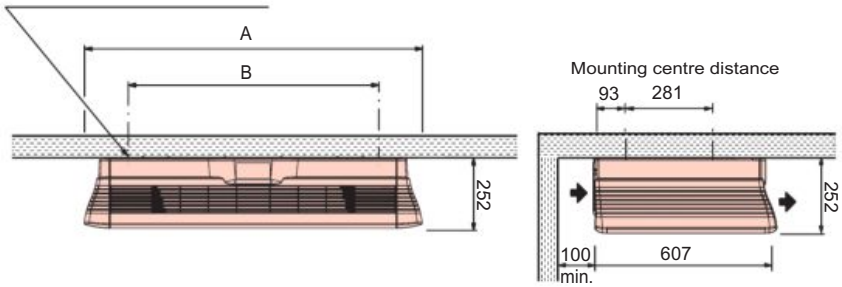

Assembly 42: Basic unit with feet

Mounting: 4 sealed M6 shafts,nuts and washers (not supplied)

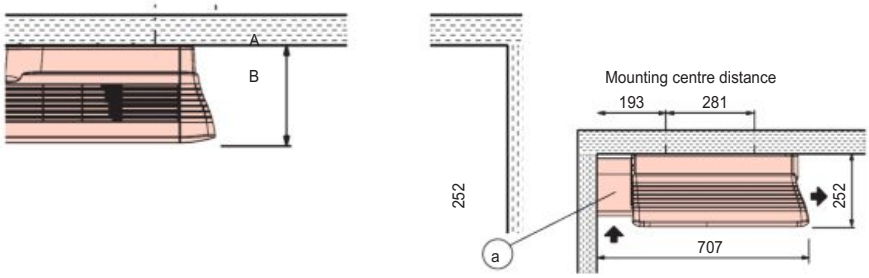

Option available on assembly 42:

- Base mounted grille

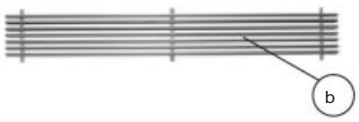

Accessories for assembly configurations (supplied separately)

a: Support feet

b: Aluminium internal return air grille between feet

Note: For assembly 42 the condensate drain pump must be used.

Sizes MAJOR LINE	A	B mounting centre distance	Weight (kg) *	
			Assembly 41D/ 41	Assembly 42
10	840	505	20	21
20	1000	665	23	24
30	1200	865	28	29
40	1400	1065	34	35
50	1600	1265	39	40
60	1800	1465	44	45

* Weight of heaviest unit in 4-pipe configuration

Assembly and dimensions – CH Model (Cased Horizontal)

Assemblies 45 and 46:

Basic unit equipped with a manual pretreated air/recycled air mixing unit with a return air grille and a damper regulating the pretreated air intake.

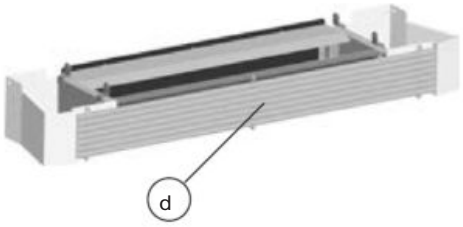

Mounting: 4 sealed M6 shafts, nuts and washers (not supplied)

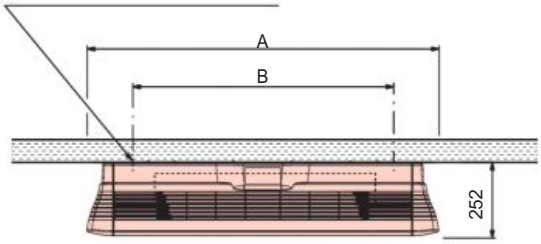

Mounting centre distance

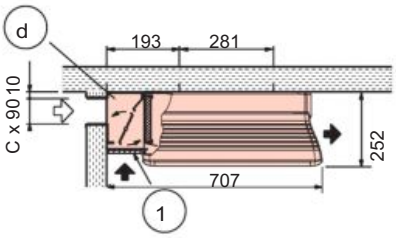

Assembly 46

Assembly 45:
identical with ceiling mounted pretreated air intake

⇨ Air pretreated by an air handling unit

Accessories for assembly configurations (supplied separately)

d Manually controlled int./ext. air recovery unit with return air grille (1) for filter removal

For assemblies 45-46 the condensate drain pump must be used.

Size MAJOR LINE	A	B mounting centre distance	C hole space	Weight (kg) *
10	840	505	430	24
20	1000	665	430	28
30	1200	865	780	32
40	1400	1065	780	40
50	1600	1265	1180	45
60	1800	1465	1180	50

* Weight of the unit in 4-pipe version (without valves)

Assembly and dimensions – NCV Model (Uncased Vertical)

Assembly 1VD: Unit with return on front

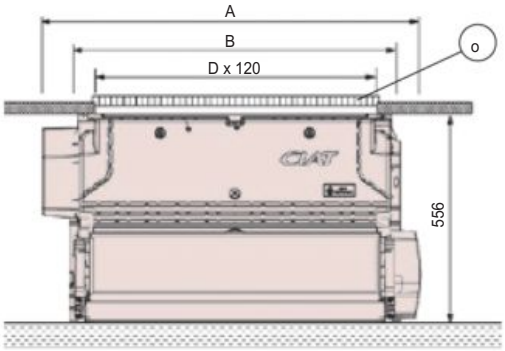

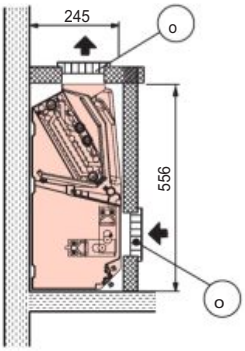

Assembly 1V: Basic unit with bottom-mounted return

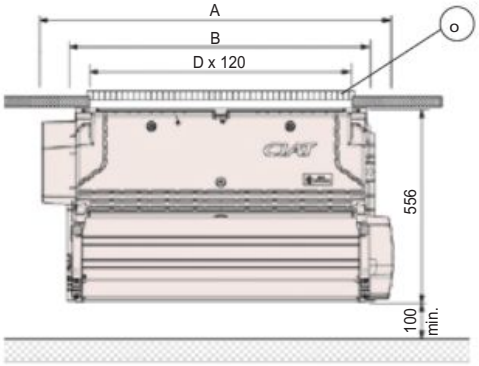

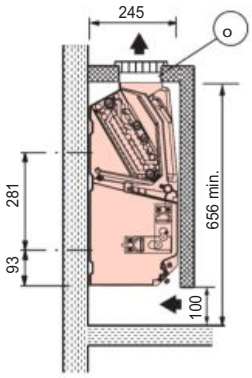

Assembly 2V: Basic unit with support base

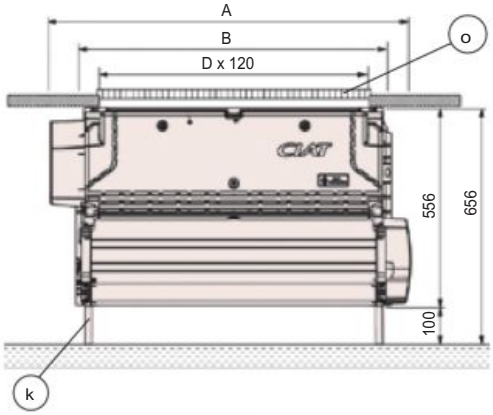

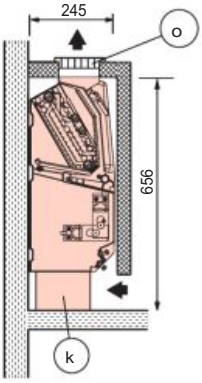

Accessories for assembly configurations (supplied separately)

k Support base

o Aluminium single deflection diffusion or return air grille with sealing frame (without hatch).

Note: this grille can be used for both return and supply air.

Sizes MAJOR LINE	A	B mounting centre distance	D grille space	Weight (kg) *
10	652	505	355	15
20	812	665	515	18
30	1012	865	715	22
40	1212	1065	915	28
50	1412	1265	1115	32
60	1612	1465	1315	36

* Weight of the unit in 4-pipe version (without valves)

Assembly and dimensions – NCV Model (Uncased Vertical)

Assemblies 5V and 6V:

Basic unit equipped with a manual pre-treated air/ recycled air mixing unit with a damper regulating the pre-treated air intake.

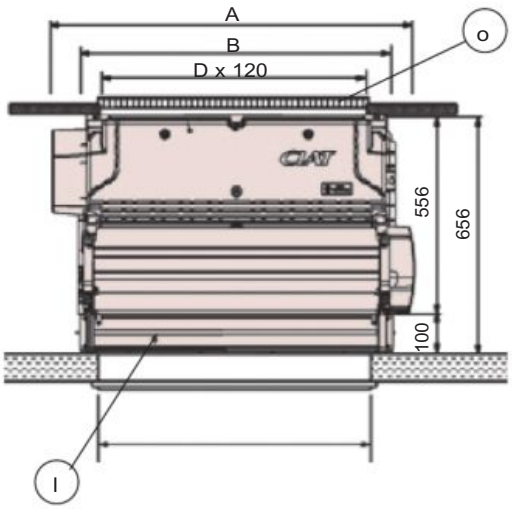

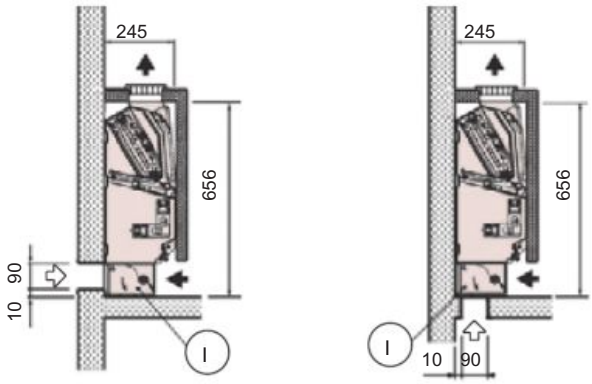

Assembly 5V

Assembly 6V

⇨ Air pretreated by an air handling unit

Accessories for assembly configurations (supplied separately)

I: Internal/external manually controlled air return unit

o: Aluminium single deflection diffusion or return air grille with sealing frame (without hatch).
For other applications, please consult us.

MAJOR LINE size	A	B mounting centre distance	C hole space	D grille space	Weight (kg)*
10	652	505	430	355	16,5
20	812	665	430	515	20
30	1012	865	780	715	25
40	1212	1065	780	915	32
50	1412	1265	1180	1115	37
60	1612	1465	1180	1315	42

* Weight of heaviest unit in 4-pipe configuration

Assembly and dimensions – NCH Model (Uncased Horizontal)

Assembly 41VD: Unit with return on front

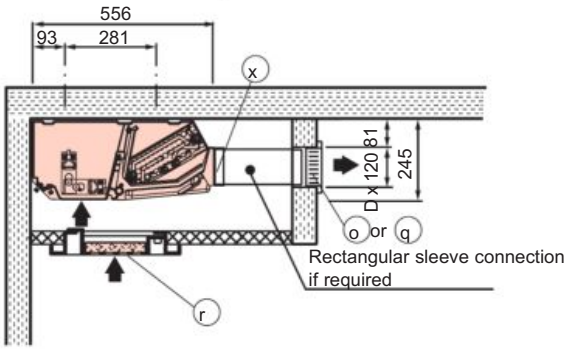

View from beneath

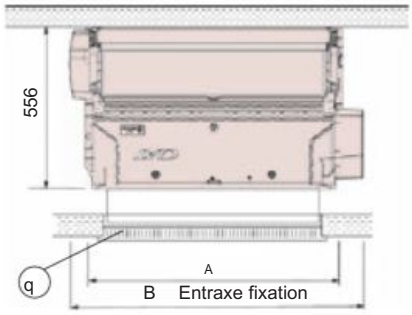

Assembly 41VD: Unit with return on front

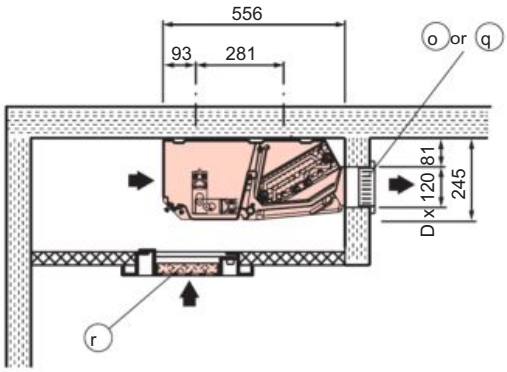

View from beneath

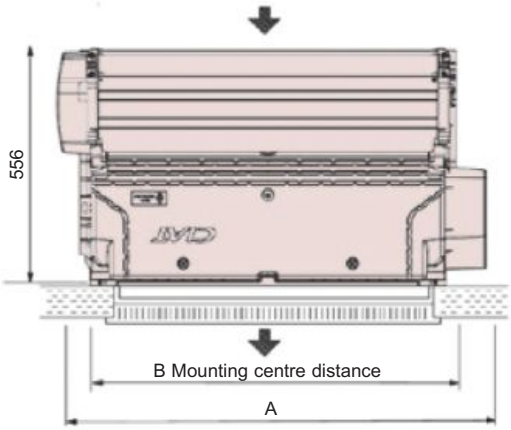

Option available
on assemblies 41VD, 41V and 42V:

- Aluminium single (o) or double (q) deflection diffusion grille with sealing frame

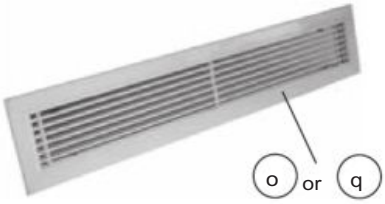

- Metal sleeve for connection to air discharge

Accessories for assembly configurations (supplied separately)

o: Aluminium single deflection diffusion grille with sealing frame.

q: Aluminium double deflection diffusion grille with sealing frame

r: 600 x 600 microperforated return air grille (see diffusion range)

x: Metal sleeve connecting rectangular sleeve to supply air

Size MAJOR LINE	A	B mounting centre distance	D grille space	Weight (kg) *
10	652	505	355	15
20	812	665	515	18
30	1012	865	715	22
40	1212	1065	915	28
50	1412	1265	1115	32
60	1612	1465	1315	36

* Weight of the unit in 4-pipe version (without valves)

Assembly and dimensions – NCH Model (Uncased Horizontal)

Assemblies 45V and 46V:

Basic unit equipped with a manual fresh air/recycled air mixing unit with a damper regulating the pre-treated air intake.

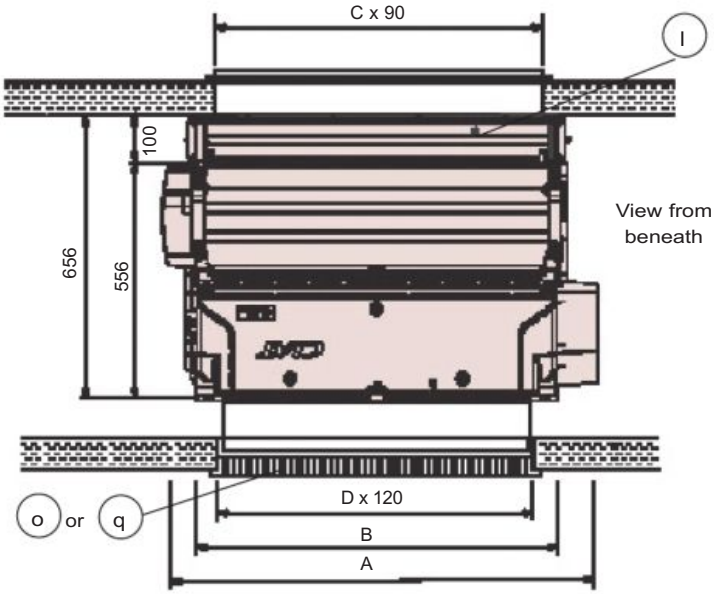

Option available
Assemblies 45V and 46V:

- Aluminium single or double deflection diffusion grille with sealing frame

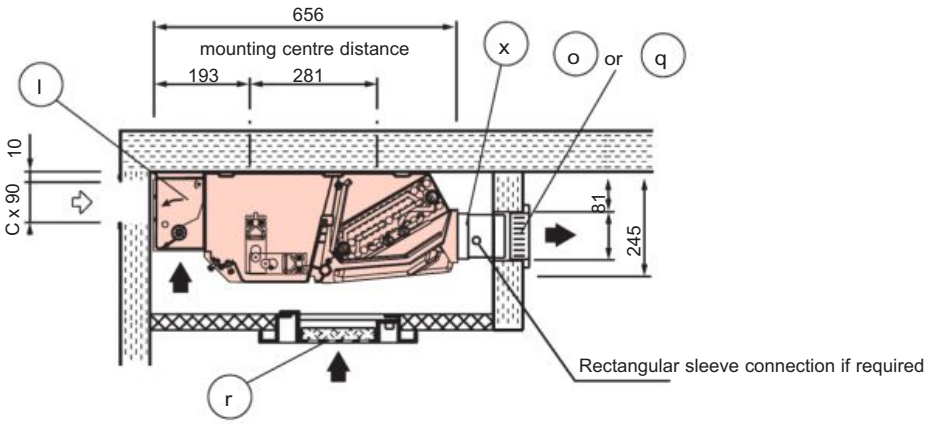

⇨ Air pretreated by an air handling unit

Accessories for assembly configurations (supplied separately)

l: Internal/external manually controlled air return unit

o: Aluminium single deflection diffusion grille with sealing frame

q: Aluminium double deflection diffusion grille with sealing frame

r: 600 x 600 microperforated return air grille (see diffusion range)

x: Metal sleeve connecting rectangular sleeve to supply air

MAJOR LINE size	A	B Mounting centre distance	C hole space	D grille space	Weight (kg)*
10	652	505	430	355	16,5
20	812	665	430	515	20
30	1012	865	780	715	25
40	1212	1065	780	915	32
50	1412	1265	1180	1115	37
60	1612	1465	1180	1315	42

* Weight of heaviest unit in 4-pipe configuration

Assembly and dimensions – NCH Model (Uncased Horizontal)

Y assembly:

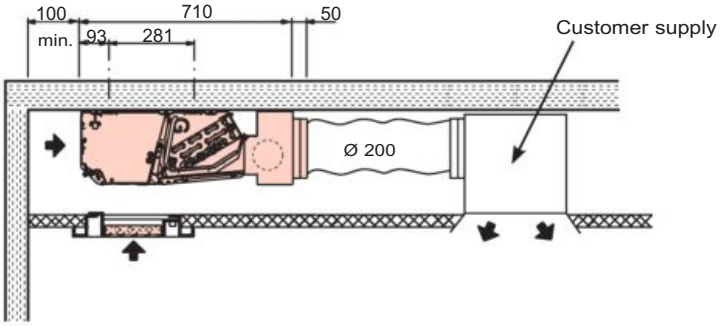

Size	Number of collars	Ø of collars
T1	1	200
T2	1	200
T3	2	200
T4	3	200
T5	3	200
T6	3	200

Supply air plenum delivered not fitted. Available for sizes 1 to 6

YK assembly:

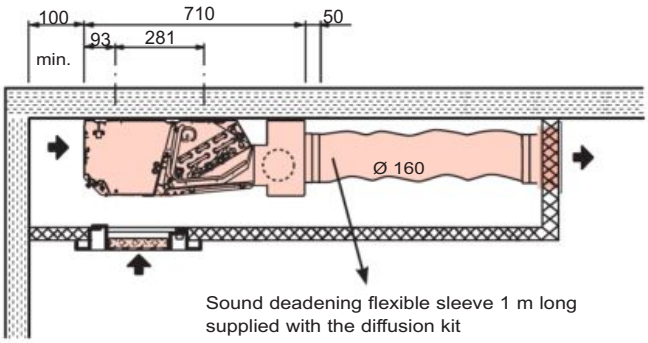

Size	Number of collars	Ø of collars
T1	1	160
T2	1	160
T3	2	160
T4	3	160
T5	3	160

Supply air plenum delivered not fitted. Available for sizes 1 to 5

Assembly H:

Supply and return air plenum factory-fitted with Ø 160 mm or 200 mm collars available for sizes 2 to 4

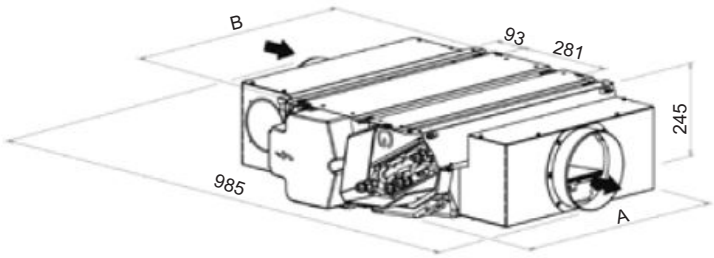

Size	A	B	Number of collars
T2	760	665	1
T3	960	865	2
T4	1160	1065	3

Assembly U:

Supply and return air plenum factory-fitted with Ø 160 mm or 200 mm collars available for sizes 2 to 4

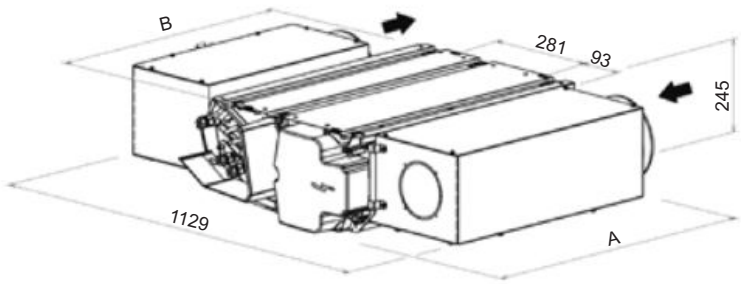

Size	A	B	Number of collars
T2	770	665	1
T3	970	865	1
T4	1170	1065	1

355

PERFORMANCE – 2-TUBE SYSTEM

Cooling mode: water temperature: 7/12 °C, inlet air temperature: 27 °C - 19 °C (WB)
Heating operation: water temperature: 45/40 °C, inlet air temperature: 20 °C

Major Line	AC motor Motor reference	HEE motor Voltage (V)	Cooling cap. W		Heating capacity W	Sound power LW dB(A)	1 Resistor W	2 Resistors W
			Total	Sensible				
102J / 102J HEE	V4	4,5	1 044	994	1 517	46	300	600
	V3	3,7	884	833	1 352	42		
	V1	2,9	711	661	1 028	36		
102M / 102M HEE	V4	4,5	1 345	1 169	1 654	46	300	600
	V3	3,7	1 088	934	1 387	42		
	V1	2,9	863	731	1 031	36		
202J / 202J HEE	V4	5	1 702	1 630	2 416	49	500	1000
	V3	4,5	1 564	1 486	2 240	42		
	V1	3,1	1 083	1 023	1 572	37		
202M / 202M HEE	V4	5	2 140	1 805	2 690	50	500	1000
	V3	4,5	1 965	1 644	2 425	46		
	V1	3,1	1 330	1 077	1 665	37		
202N / 202N HEE	V4	5	2 445	1 998	2 936	[illegible]		
	V3	4,5	2 195	1 778	2 627	[illegible]		
	V1	3,1	1 480	1 156	1 786	[illegible]		
302J / 302J HEE	V4	5,8	2 720	2 160	3 395	53	800	1600
	V3	4,7	2 400	1 875	2 950	47		
	V1	2,2	1 390	1 035	[illegible]	29		
302K / 302K HEE	V4	5,8	3 155	2 616	[illegible]	53		
	V3	4,7	2 755	2 245	[illegible]	47		
	V1	2,2	1 601	1 416	1 729	29		
302M / 302M HEE	V4	5,8	3 519	2 705	4 278	53	800	1600
	V3	4,7	3 052	[illegible]	3 584	47		
	V1	2,2	1 377	[illegible]	1 692	29		
402M / 402M HEE	V4	7,1	[illegible]	4 483	6 278	59	1200	2400
	V3	5,8	[illegible]	3 586	5 126	54		
	V1	3,6	2 91[illegible]	2 164	3 158	51		
502M / 502M HEE	V4	7,1	6 152	4 844	6 916	60	1600	3200
	V3	5,9	5 349	4 104	5 708	55		
	V1	3,7	3 435	2 624	3 643	42		
602N / 602N HEE	V4	7,5	8 000	6 200	9 630	52		
	V3	6,7	7 310	5 553	4 800	59		
	V1	4,3	4 810	3 515	4 905	48		

PRELIMINARY DATA

Table with hypothetical acoustic attenuation of the room and installation for 2-pipe system from previous page:

CV/CH/NCV models:
12dB: Sizes 102J, 102M, 202J, 202M, 202N, 302J, 302K, 302M
14dB: Sizes 402M, 502M
15dB: Size 602N
NCH models:
14dB: Sizes 102J, 102M, 202J, 202M, 202N, 302J, 302K, 302M
16dB: Sizes 402M, 502M, 602N

(1) Important: the air supply temperature should not exceed 65°C (CIAT recommendation).

PERFORMANCE – 4 TUBE SYSTEM

Cooling operation: water temperature: 7/12°C, inlet air temperature: 27°C - 19°C (WB)
Heating operation: water temperature: 65/55°C, inlet air temperature: 20°C

Major Line	AC motor Motor reference	HEE motor Voltage (V)	Cooling cap. W		Heating capacity W	Sound power LW dB (A)
			Total	Sensible		
104P /104P HEE	V4	4,5	1 345	1 169	1 200	49
	V3	3,7	1 088	934	1 050	42
	V1	2,9	863	731	870	37
204P / 204P HEE	V4	5	2 138	1 804	2 691	55
	V3	4,5	1 964	1 644	2 4[illegible]	46
	V1	3,1	1 330	1 077	1 668	38
204R / 204R HEE	V4	5	1 923	1 736	[illegible]	55
	V3	4,5	1 735	1 550	3 327	46
	V1	3,1	1 209	1 072	2 598	38
304P / 304P HEE	V4	5,8	3 519	[illegible]705	1 740	56
	V3	4,7	3 052	[illegible]	1 540	47
	V1	2,2	1 377	1 063	815	29
304R / 304R HEE	V4	5,8	[illegible]	2 391	4 013	56
	V3	4,7	[illegible]56	2 047	4 148	47
	V1	2,2	[illegible]185	965	2 122	29
404P / 404P HEE	V4	7,1	5 264	4128	4 340	61
	V3	5,[illegible]	4 465	3 427	3 920	54
	V1	[illegible]	2 818	2 102	2 950	41
504P / 504P HEE	V4	7,1	5 885	4 810	5 744	62
	V3	5,9	4 976	4 068	5 061	55
	V1	3,7	3 331	2 587	3 766	42
604P / 604P HEE	V4	7,5	7 250	5 730	6 130	64
	V3	6,7	6 630	5 180	5 800	59
	V1	4,3	4 420	3 310	4 350	48

PRELIMINARY DATA

Table with hypothetical acoustic attenuation of the room and the installation:

CV/CH/NCV models
12dB: Sizes 104P, 204P, 204R, 304P, 304R
14dB: Sizes 404P, 504P
15dB: Sizes 604P
NCH models:
14dB: Sizes 104P, 104R, 204P, 204R, 304P, 304R,
16dB: Sizes 404P, 504P, 604P

TECHNICAL CHARACTERISTICS

Coil capacity (litres)

		102J	102M	202J	202M	202N	302J	302K	402M	502M	602N
2-pipe system	Hot or cold water coil	0,22	0,31	0,30	0,44	0,52	0,40	0,48	0,80	1,03	1,32
		104P		204P	204R		304P	304R	404P	504P	604P
4-pipe system	Cold water coil	0,26		0,45	0,36		0,60	0,52	0,71	0,89	1,32
	Hot water coil	0,14		0,1	0,19		0,13	0,21	0,22	0,29	0,47

Coil connection diameters

- Coil connection type: rotary couplings with flat face;
- Valve connection type: install flush fit male threaded unions.

		102J	102M	202J	202M	202N	302J	302K	402M	502M	602N
2-pipe system	Hot or cold water coil	G1/2"	G1/2"	G1/2"	G1/2"	G1/2"	G1/2"	G1/2"	G1/2"	G3/4"	G3/4"
		104P		204P	204R		304P	304R	402P	502P	602P
4-pipe system	Cold water coil	G1/2"		G1/2"	G1/2"		G1/2"	G1/2"	G1/2"	G3/4"	G3/4"
	Hot water coil	G1/2"		G1/2"	G1/2"		G1/2"	G1/2"	G1/2"	G1/2"	G1/2"

Motor specifications

		AC Asynchronous Motor							HEE brushless motor					
	Speeds	Sizes						Speeds	Sizes					
		10--	20--	30--	40--	50--	60--		10--	20--	30-	40--	50--	60--
Max. power input (W)	V5	33	58	88	106	108	135	V5	11	25	32	77	90	100
	V4	31	41	67	93	94	114	V4	9	15	22	63	80	75
	V3	29	36	52	80	79	99	V3	6	11	13	36	42	55
	V2	27	31	42	72	72	88	V2	5	8	7	21	26	32
	V1	26	27	35	63	63	77	V1	4	5	3	11	13	16
Max. input current (W)	V5	0,14	0,25	0,38	0,46	0,47	0,59	V5	0,11	0,20	0,29	0,62	0,71	0,74
	V4	0,13	0,18	0,29	0,40	0,41	0,50	V4	0,09	0,13	0,20	0,50	0,62	0,67
	V3	0,13	0,16	0,23	0,35	0,34	0,43	V3	0,07	0,11	0,13	0,30	0,35	0,44
	V2	0,12	0,13	0,18	0,31	0,31	0,38	V2	0,06	0,09	0,08	0,19	0,21	0,27
	V1	0,11	0,12	0,15	0,27	0,27	0,33	V1	0,06	0,06	0,06	0,11	0,13	0,16

Note: Specifications determined for 230V +/-10% - 50Hz supply.
For operation at 60 Hz, the power input and rotation speed values are generally higher. Motor operating range:
minimum return T°C: 0°C,
maximum return T°: 40°C

Unit information plate

The information plate shows all the information needed to identify the unit and its configuration. This plate is located on the condensate pan, on the electrical connection side.

1. Code
2. Serial number
3. Description of the unit
4. Nominal motor output
5. Motor rotation speed
6. Coil type
7. Wiring diagram reference
8. Motor speed wiring
9. Maximum operating pressure
10. Electrical heater specifications (if fitted)
11. EC declaration no.
12. Refer to the installation instructions

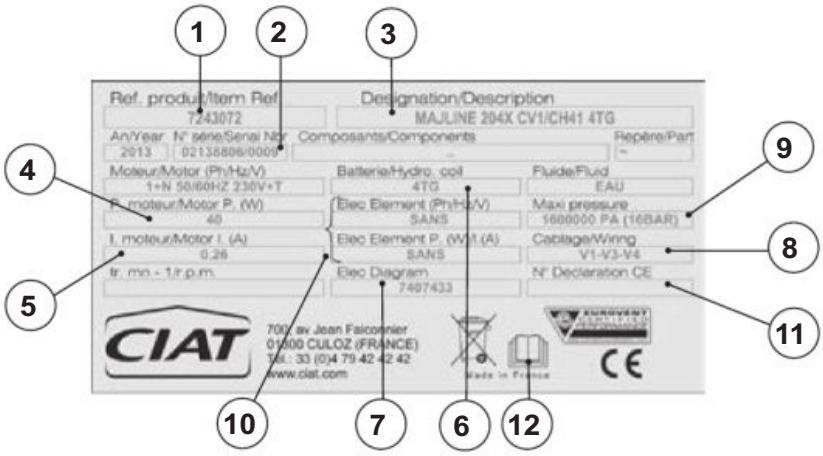

COMFORT LINE

Comfort units
Ductable

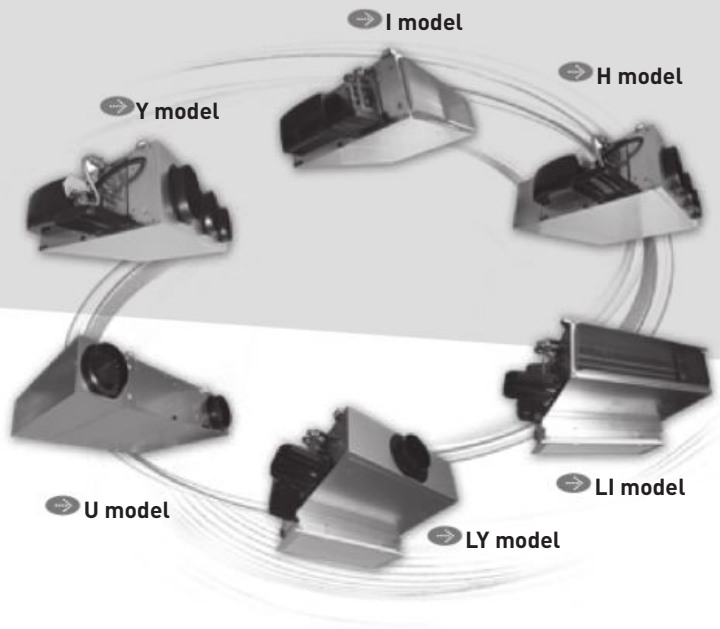

Comfort unit with ***high available static pressure***
Modular *air discharge configurations*
Flexible *installation*
Excellent ***acoustic comfort***

Comfort Line

With the new ductable type Comfort Unit, CIAT is strengthening its strategy of sustainable development and providing solutions that meet the latest requirements in terms of comfort, energy optimisation and quality for interior environments.

Integrating the latest technical developments, **Comfort Line** is the customisable solution designed to provide summer and winter comfort for occupants of new and renovated buildings.

Easy to install, COMFORT LINE is available in 7 frame sizes and comes in 4 thicknesses: 215, 240, 245, 280 and 375 mm, enabling perfect integration into all types of suspended ceilings.

For total flexibility and adaptability, COMFORT LINE is available in several assembly versions: I, Y, H, H Compact, U, U Compact, LI and LY.

In the HEE version (High Energy Efficiency), COMFORT LINE, not only provides energy savings of up to 85%, but also meets the strict requirements of thermal regulations such as RT 2012 in France. Furthermore, COMFORT LINE complies with the ErP 2015 directive.

In conjunction with Epure technology, COMFORT LINE treats particle pollution. The EPURE solution guarantees excellent indoor air quality and ensures a PM2.5 particulate concentration below the limit recommended by the WHO (10 µg/m^3).

Range

The COMFORT LINE range comprises 7 sizes covering a large scope of air flow rates, and comes in 10 models to provide great flexibility in terms of suspended ceiling configurations.

COMFORT LINE is available as:

- A 2-tube system, with heating or cooling mode.
- A 2-tube + 2-wire system, with cooling + electric mode or heating/cooling + electric mode.
- A 4-tube system, with heating and cooling mode.

359

Innovative design

- Modular, scalable, functional frame,
- simplified maintenance (fan motor assembly + filter accessed via 2 or 4 bolts),
- no rivets used in its construction so it can be dismantled at the end of its service life,
- multiple configurations depending on customer requirements.

Advantages

- Minimal dimensions in the suspended ceilings.
- Integration of the latest technical developments with a very-low-consumption HEE motor and the Epure function for high indoor air quality (IAQ).
- Total flexibility and adaptability (assembly, water temperature, diffusion, filtration, etc.).
- Extensive capacity range.
- Wide selection of coils to adapt to various water temperatures
- Uses an ecological energy transfer fluid.
- Comfort unit with high available static pressure.
- Easy maintenance, simplified access.
- Environmentally-responsible product.

Function

Air quality

The air we breathe is full of fine particles which enter the respiratory system to varying degrees.

The Epure function (air purification system) is to exceed the WHO's recommendations on particle removal, reducing PM2.5 particulates to below 10 µg/m³ in less than an hour. This is equivalent to a reduction of 50% to 90% in particulate matter.

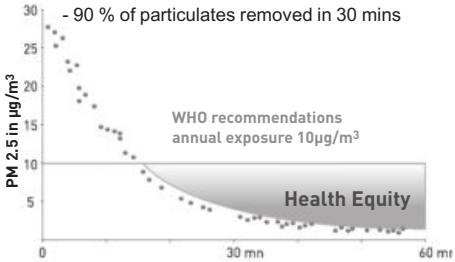

Compliance with energy conservation requirements

High Energy Efficiency performance

In order to promote energy efficiency in buildings, COMFORT LINE is equipped with an HEE motor which reduces the unit's electricity consumption by up to 85%.

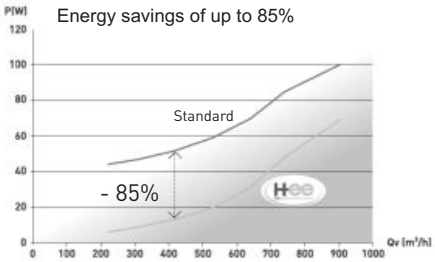

Ease of installation and operation

- Easy maintenance, with no need to remove the device, easy access to the fan motor assembly, air filter, hydraulic coil.
- Flexible installation.
- Reduced thickness of the smallest unit (215 mm), to allow installation in suspended ceilings with less space.

Eco-design

COMFORT LINE has been fully designed using eco-design principles and falls within CIAT's sustainable development policy.

- Choice of supplier located close to the production plant,
- 94% recyclability rate,
- since 2013, CIAT has been working in partnership with ECOLOGIC for the collection and recovery of waste from our appliances at end of life, subject to the WEEE directive.

MORPHO CODES - COMFORT LINE DESCRIPTION

Range	Size	Model	Assembly	No. and collar diameter	Coil type	Cou-pling	Thermal function		Motor	Speeds	Filter
CFL	3 4C	LY	STD	3D200	4T	G	F	+ 1400W	HEE	depending on selection	G3

EP	Epure filter
G3	G3 filter
NF	No filter

HEE 2-10V	Low-consumption motor 2-10 V control
HEE ON/OFF	Low-consumption motor 3-speed control
AC	5-speed asynchronous motor

500 W or 1000 W	T0, T1 & T2
700 W or 1400 W	T3 and T4
1200 W or 2400 W	T5 and T6

F	Cooling
C	Heating
CF	Heating/cooling

G	Left, facing air supply
D	Right, facing air supply

2T	2-tube
2T2F	2-tube + wiring
4T	4-tube

1D160	1 x 160 mm collar	T0 and T1
1D200	1 x 200 mm collar	T0 and T1
2D160	2 160 mm collars	T0, T1 and T2
2D200	2 200 mm collars	T0, T1 and T2
2D250	2 250 mm collars	T4
3D160	3 160 mm collars	T3
3D200	3 200 mm collars	T3 and T4
3D250	3 250 mm collars	T5
4D200	4 200 mm collars	T5
4D250	4 250 mm collars	T6
5D200	5 200 mm collars	T6

STD	Suspended ceiling
FPR	Raised floor

I	Rectangular return -rectangular air supply
Y	Rectangular return -circular air supply collars
H	Circular return collars - circular air supply collars
H_COMP	Without filter Circular return collars -circular air supply collars
U	1 circular lateral return collar - 1 circular lateral air supply collar
U _COMP	Without filter 1 circular lateral return collar -1 circular lateral air supply collar
LI	Return underneath - Rectangular air supply
LY	Return underneath - Circular air supply collars

2B	2-tube 1.5-row version	T0 & T6
2C	2-tube 2.5-row version	T2 to T5
2D	2-tube 3-row version	T1 to T6
2E	2-tube 4-row version	T1 to T6
4B	4-tube, 1.5-row version (cooling) + 0.5 row version (heating)	T0 & T6
4C	4-tube, 2.5-row version (cooling) + 0.5 row version (heating)	T2 to T5
4D	4-tube, 3.5-row version (cooling) + 0.5 row version (heating)	T1 to T6

0	Size
1	
2	
3	
4	
5	
6	

CFL	COMFORT LINE

4

TECHNICAL DESCRIPTION

Frame

■ Galvanised panelling, nickel-plated zinc-coated steel fastenings.

Size 0:
Polyester textile fibre insulation. M1 fire rating, thickness 10 mm

Size 1 to 6:
Melamine resin insulation, springy open-cell foam, plus aluminium shield to prevent any dust build-up in the insulation and facilitate cleaning. M1 fire rating, thickness 15 mm.

Water coil

- 1 hot water or cold water circuit (2-tube system)
- 1 hot water + 1 cold water circuit (4-tube system)
- Internally threaded rotating "female" couplings with flat face (diameter G½" and G¾" according to size) and O-ring gasket.
- Copper tubes, continuous aluminium fins
- Draining and air bleed valve
- 16 Bar nominal service pressure (at 20°C), 24 Bar test pressure
- Maximum hot water inlet temperature:
  - 4-tube application: 90°C
  - 2-tube application: 90°C
  - 2T/2-wire application: 55°C (min. air flow rate: 200 m^3/h)

Electrical heater (230V-1Ph-50Hz)

For Size 0:
Resistive wire type heater (230 V - 1-ph - 50 Hz)
The electrical heater has a double safety feature: Integrated self-hold safety thermostat with auto reset and thermal fuse

For sizes 1 to 6:
Shielded single-tube heating element, pin-mounted on the hydraulic coil outlet and providing excellent supply air temperature distribution.
1 capillary tube temperature limiter with manual reset, and 1 capsule temperature limiter with automatic reset.

Condensate drain pan

Size 0
Injected polypropylene drain pan insulated with 5 mm PE foam.
Drainage diameter: external Ø 16 mm
Class M1 fire rating

Size 1 to 6:
CIAT design (patent application no.1254978)
Recyclable thermoplastic drain pan, designed to reduce air leaks to outside the device on the one hand, and to prevent any air bypass around the coil on the other.
Its design also means that it retains only minimum condensates, while optimising the pump running time, and ensuring greater safety during any coil maintenance
Condensate drainage from the pan bottom, naturally inclined.
Drainage bushings manually reversible toward the rear or front of the device
Drainage diameter: Ø 22 mm

Fan motor assembly size 0 to 5

1 fan motor assembly fitted with:

Fan

1 or 2 HEE impeller(s), with CIAT exclusive High Energy Efficiency airfoil blades in self-extinguishable ABS (HB) with galvanised metal housing.

HEE motor

High energy efficiency motor enabling a reduction of up to 85% in electricity consumption.

HEE motor description:

- Brushless technology
- Sealed, tropicalised, with protected shaft
- Gradual actuation with 0-10V control signal
- Internal normally closed series automatic heat protection on the winding.
- Supply 230V±10%/1-Ph/50-60 Hz.

Optional

- 3-speed on/off output motor actuation
- "DFS" motor fault output using a photocoupler for potential alarm feedback via a KNX protocol communication bus. (via V3000 controller)

Note: The minimum voltage required for start-up of the motor is 2V.

Or

Asynchronous motor:

5-speed motor connected to terminal block.

Asynchronous motor description:

- Sealed, tropicalised, with protected shaft,
- permanent capacitor,
- ball bearings,
- internal automatic overload protection as standard on winding,
- resilient mounts,
- 230 V±10 %/1-ph/50-60 Hz supply,
- high efficiency and power factor.

Size 6 fan motor assembly

HEE solution:

2 fan motor assemblies fitted with:

Fan

Aluminium single impeller with forward-curved airfoil blades, dynamically balanced dual inlet with galvanised metal housing.

HEE motor

High energy efficiency motor enabling a reduction of up to 85% in electricity consumption (see HEE motor description for sizes 1 to 5)

AC motor solution (not compliant with ErP2015):

Fan

2 aluminium impellers with forward-curved airfoil blades, dynamically balanced dual inlet with galvanised metal housings.

Asynchronous motor

Motor with 5 speeds connected to the terminal block (see description of AC motor sizes 1 to 5).

362

Electrics box

- Hydraulic connection side,
- large ABS electrics box, 2-screw closure,
- protection rating IP20,
- terminal block on DIN rail in accordance with EN 50022, depth 7.5 mm,
- cable routing for customer electrical connections.

Filtration available (excluding Compact U and H versions)

■ EPURE function

- A protected air stream which prevents particles from being drawn into suspended ceilings.
- Local filtration using a high efficiency folded filter medium effective for PM of 2.5 microns:
  - Filter area: 10 times the intake surface area.
  - Low energy impact.
  - Improved service life.
  - M1 fire rating.
  - Easy access via 2 or 4 bolts

Or

- Flexible filter medium made of regenerative polyester fibre.
- EN779 Efficiency Class: G3.
- Fire rating: M1.
- Rigid metal frame.
- Easy access via 2 or 4 bolts.

Plenums

■ Galvanised panelling, nickel-plated zinc-coated steel fastenings,
■ ABS (HB) collars clipped onto the panelling,
■ Supply plenum:

Size 0:
insulated plenum: polyester textile fibre insulation. M1 fire rating, thickness 10 mm

Size 1 to 6:
insulated plenum: melamine resin insulation, flexible open-cell foam, plus aluminium covering to prevent any dust build-up in the insulation and facilitate cleaning.
M1 fire rating, thickness 15 mm,

■ Return plenum:
- uninsulated plenum.

Mounting the unit

- COMFORT LINE must be suspended from the ceiling using 4 or 6 threaded rods for size 6: with CIAT resilient mounts min. diameter 6 mm and max. diameter 8 mm, or without CIAT suspension diameter 8 mm to 10 mm.

Packaging

- Delivered on pallet and protected by stretch wrap film.

Control

- RTR-E electromechanical wall-mounted thermostat range
- V30 and V300 electronic range,
- V3000 networked electronic range (KNX),
- Networked electronic range (LON): VLON2,
- Fresh air control:
  Pack R1: fresh air managed via presence sensor,
  Pack R+ : Fresh air managed by CO_2 sensor.

Options (factory-fitted)

- Condensate drain pump
- Smooth metal rectangular supply air sleeve for Size 0
- Smooth metal rectangular return sleeve on all sizes
- Supply and/or return plenums for Y, H and U' assembly
- Unit without electrics box or DIN rail ("bare wire option")
- Hydraulic coil with protected fins for harmful/corrosive atmospheres (coastal locations, or areas close to chemical industries)

Accessories (supplied separately)

- Ø100 mm or 125 mm smooth collar,
- Ø100 mm or 125 mm self-adjustable fresh air module kit:
  - flow rate 15/30/45 m^3/h,
  - flow rate 60/75/90 m^3/h,
- Resilient mounts,
- Ø 125 mm self-adjustable fresh air module kit for flow rates of 120/150/180 m^3/h
- Ø160 mm circular duct accessory for air distribution kit,
- Condensate pan expansions, except for size 0,
- Flexible connection kit, length 300 mm, with or without 9-mm insulation.

Specific options (on request)

- Return plenum insulation
- Plenums with collar configurations (diameter and position) in addition to the standard offer
- Electrical and hydraulic connections on opposite sides

4

LINEAR CONCEPTS

I MODEL

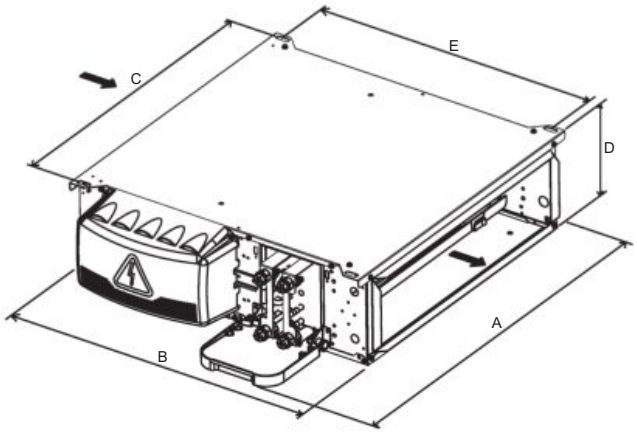

	A	B	C	D	E	Supply	Suction
T0 *	708	590	485	240	538	430 x 210	430 x 210
T1	898	720	692	215	649	620 x 170	609 x 170
T2				245		620 x 200	609 x 200
T3	1198		992			920 x 200	909 x 200
T4				280		920 x 235	900 x 235
T5	1498		1292			1220 x 235	1209 x 235
T6		860		375		1220 x 330	1200 x 330

* devices without supply air sleeve

Y MODEL

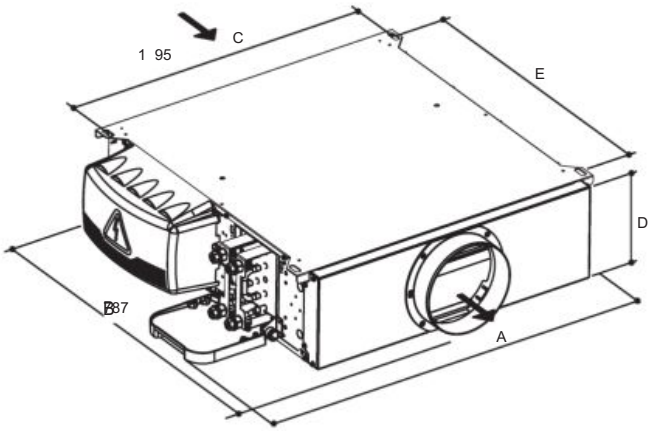

	A	B	C	D	E	Supply	Suction
T0	708	642	485	240	538	1 or 2 x Ø 160 or 200 mm	430 x 210
T1	898	786	692	215	649	1 or 2 x Ø 160 or 200 mm	609 x 170
T2				245		2 x Ø 160 or 200 mm	609 x 200
T3	1198		992			3 x Ø 160 or 200 mm	909 x 200
T4				280		3 x Ø 200 or 2 x Ø 250 mm	900 x 235
T5	1498		1292			4 x Ø 200 or 3 x Ø 250 mm	1209 x 235
T6		926		375		5 x Ø 200 or 4 x Ø 250 mm	1200 x 330

COMFORT LINE

Comfort units
Ductable

H MODEL

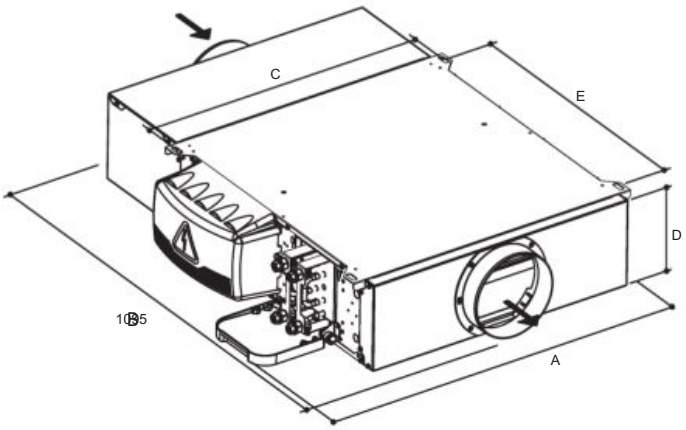

	A	B	C	D	E	Supply	Suction
T0	708	694	485	240	538	1 or 2 x Ø 160 or 200 mm	1 or 2 x Ø 160 or 200 mm
T1	898	1095	692	215	649	1 or 2 x Ø 160 or 200 mm	1 or 2 x Ø 160 or 200 mm
T2				245		2 x Ø 160 or 200 mm	2 x Ø 160 or 200 mm
T3	1198		992			3 x Ø 160 or 200 mm	3 x Ø 160 or 200 mm
T4				280		3 x Ø 200 or 2 x Ø 250 mm	3 x Ø 200 or 2 x Ø 250 mm
T5	1498		1292			4 x Ø 200 or 3 x Ø 250 mm	4 x Ø 200 or 3 x Ø 250 mm
T6		1232		375		5 x Ø 200 or 4 x Ø 250 mm	5 x Ø 200 or 4 x Ø 250 mm

H COMPACT MODEL

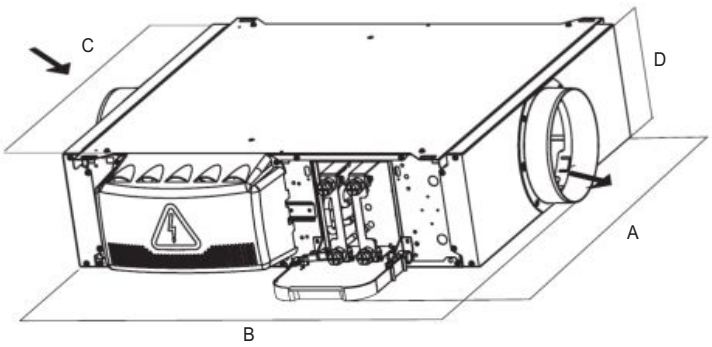

	A	B	C	D	E	Supply	Suction
T0	708	694	485	240	538	1 or 2 x Ø 160 or 200 mm	1 or 2 x Ø 160 or 200 mm
T1	898	872	692	215	649	1 or 2 x Ø 160 or 200 mm	1 or 2 x Ø 160 or 200 mm
T2				245		2 x Ø 160 or 200 mm	2 x Ø 160 or 200 mm
T3	1198		992			3 x Ø 160 or 200 mm	3 x Ø 160 or 200 mm
T4				280		3 x Ø 200 or 2 x Ø 250 mm	3 x Ø 200 or 2 x Ø 250 mm

U MODEL

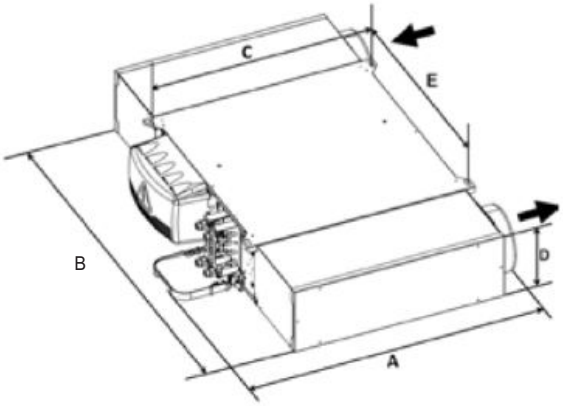

	A	B	C	D	E	Supply	Suction
T0	730	1060	485	240	538	1 x Ø 200 mm or Ø 160 mm	1 x Ø 200 mm or Ø 160 mm
T1	920	1213	692	215	649	1 x Ø 200 mm or Ø 160 mm	1 x Ø 200 mm or Ø 160 mm
T2				245		1 x Ø 200 mm or Ø 160 mm	1 x Ø 200 mm or Ø 160 mm
T3	1120		992			1 xØ 200 mm	1 xØ 200 mm
T4		1313		280		1 xØ 250 mm	1 xØ 250 mm

U Compact MODEL

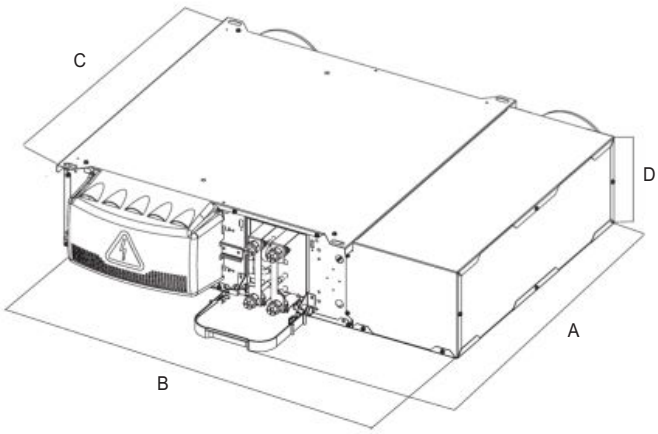

	A	B	C	D	E	Supply	Suction
T0	730	825	485	240	538	1 x Ø 200 mm or Ø 160 mm	1 x Ø 200 mm or Ø 160 mm
T1	920	956	692	215	649	1 x Ø 200 mm or Ø 160 mm	1 x Ø 200 mm or Ø 160 mm
T2				245		1 x Ø 200 mm or Ø 160 mm	1 x Ø 200 mm or Ø 160 mm

366

L CONCEPTS

LI MODEL

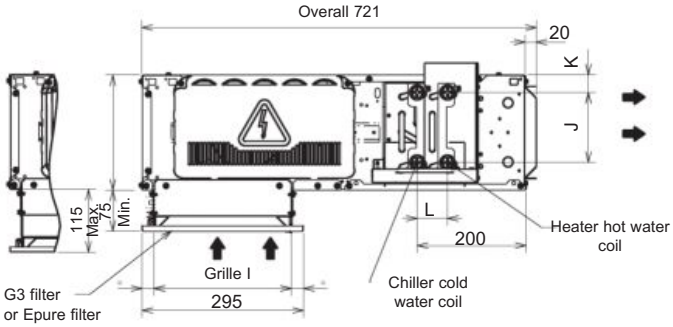

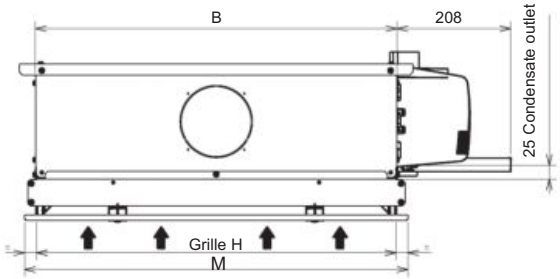

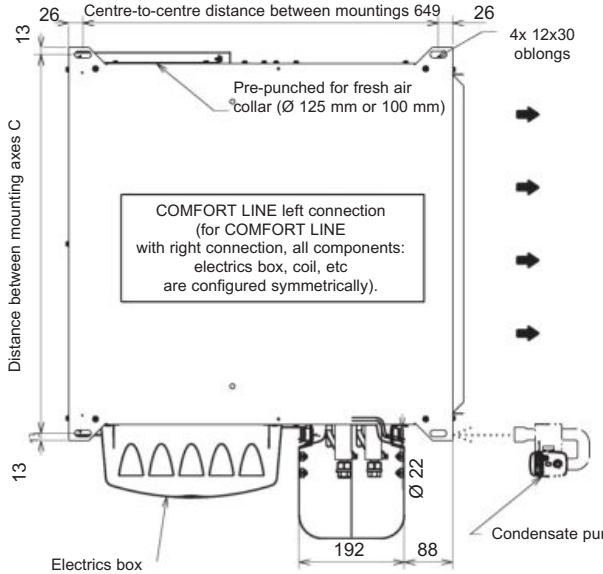

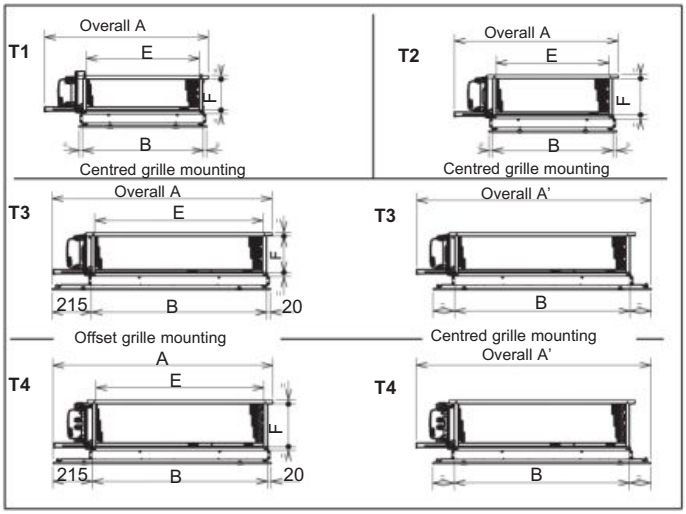

Note: 1200-mm long grille optional for sizes 1 & 2. Consult us

	A	A'	B	C	D	E	F	G		I	J		K		L(4T)		D
						Air supply	Air supply	Coil C	Coil H		Coil C	Coil H	Coil C	Coil H	3 rows	4 rows	
T1	898		660	692	215	620	170	1/2"	1/2"	250	128	128	35	35	35	35	700
T2					245		200				160	160					
T3	1205	1285	960	992		920											1195
T4					280		235	3/4"			192	40		110		62	

LIK MODEL

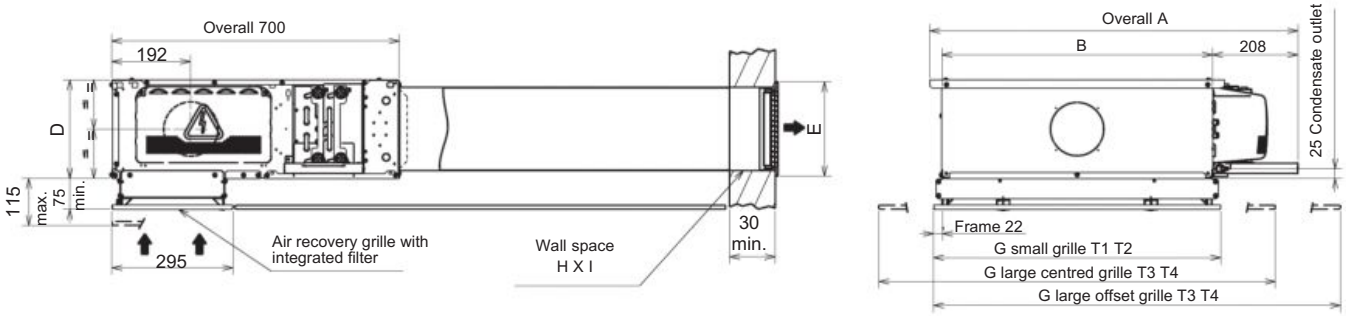

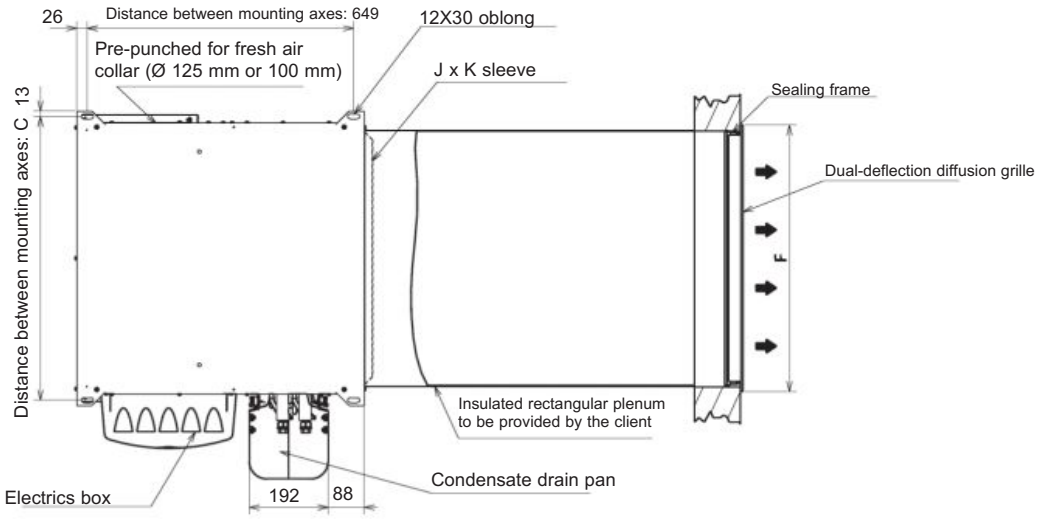

	A	B	C	D	E	F	G	H	I	J	K
T1	898	660	692	215	200	650	700	175	625	620	170
T2				245	230			205			200
T3	1205	960	992			950	1195		925	920	
T4				280	265			240			235

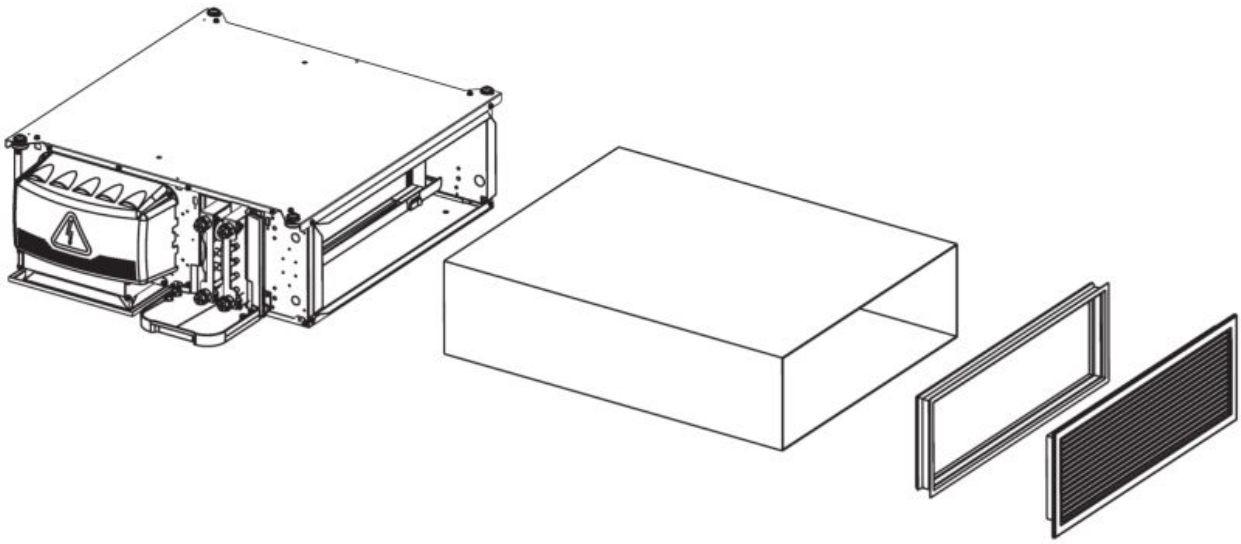

LY MODEL - ø 200 collar

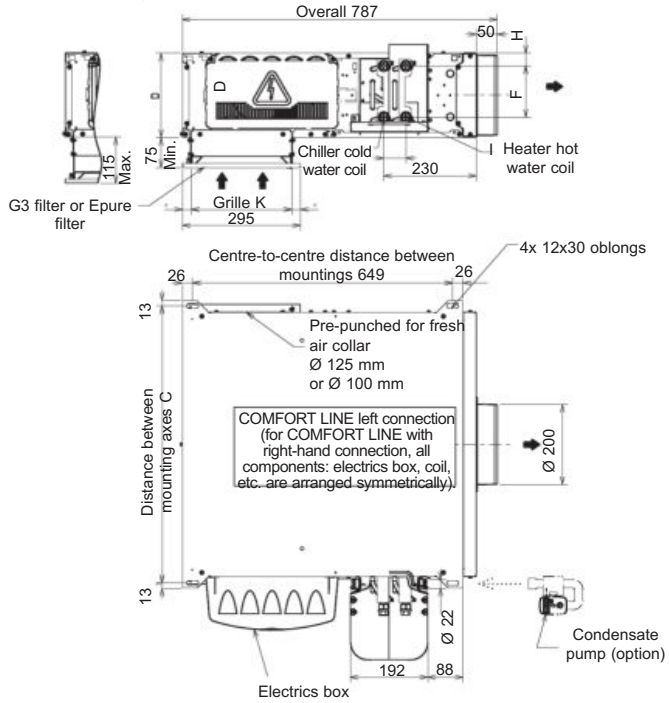

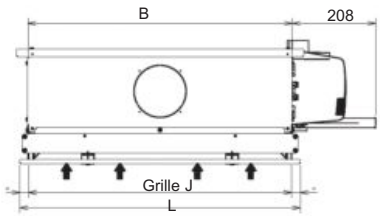

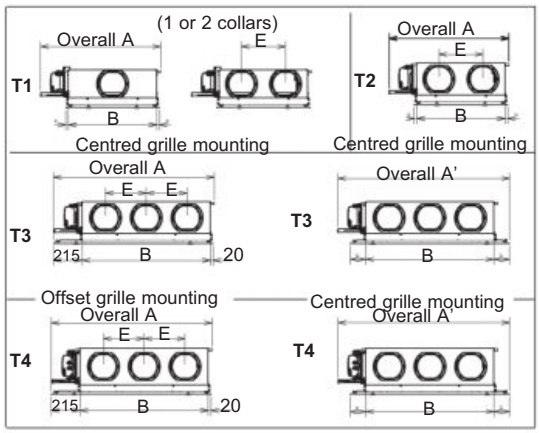

Note: 1200-mm long grille optional for sizes 1 & 2. Consult us

	A	A'	B	C	D	E	F Coil C	F Coil H	G Coil C	G Coil H	H Coil C	H Coil H	I (4T) 3 rows	I (4T) 4 rows	J	K	L
T1 (1V)	898		660	692	215		128	128	1/2"	1/2"	35	35	55	55	655	250	700
T1 (2V)						330											
T2					245		160	160									
T3	1205	1285	960	992		305									1150		1195
T4					280		192	192	3/4"			110		62			

LY MODEL - ø 160 collar

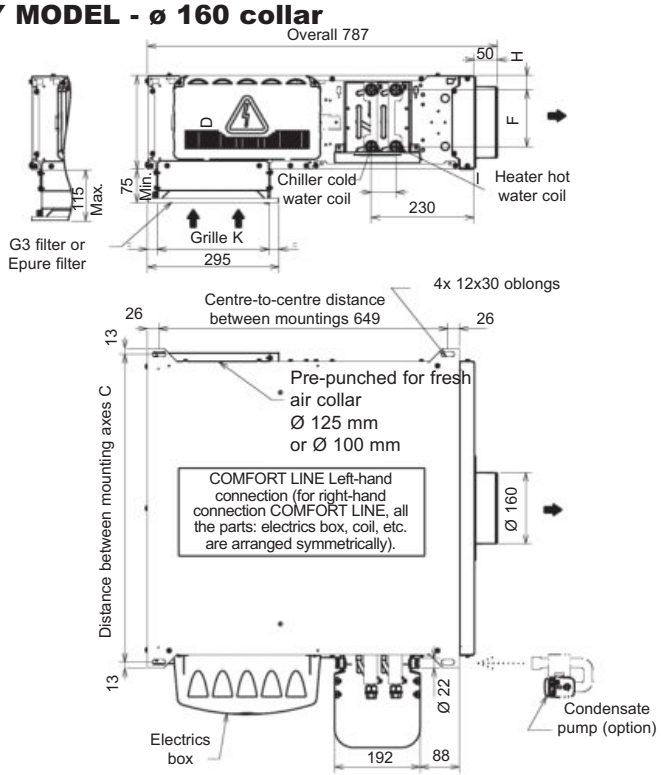

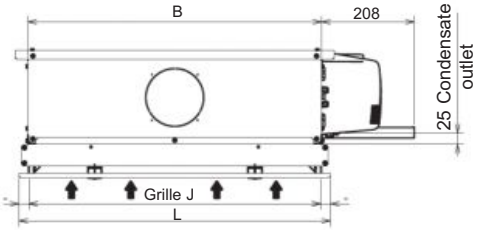

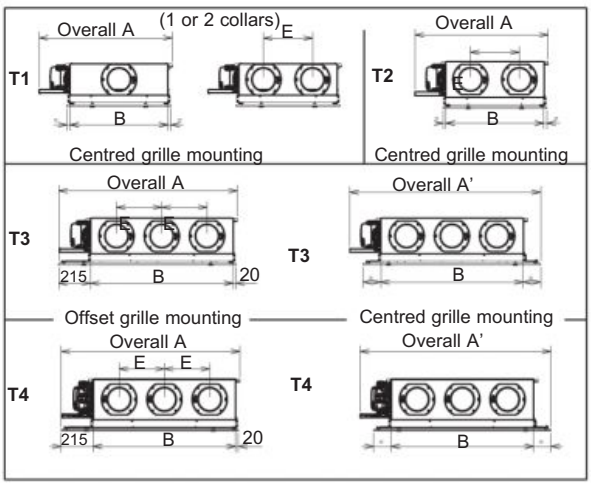

Note: 1200-mm long grille optional for sizes 1 & 2. Consult us

	A	A'	B	C	D	E	F Coil C	F Coil H	G Coil C	G Coil H	H Coil C	H Coil H	I (4T) 3 rows	I (4T) 4 rows	J	K	L
T1 (1V)	898		660	692	215		128	128	1/2"	1/2"	35	35	55	55	655	250	700
T1 (2V)						330											
T2					245		160	160									
T3	1205	1285	960	992		305									1150		1195
T4					280		192	192	3/4"			110		62			

369

LYK MODEL

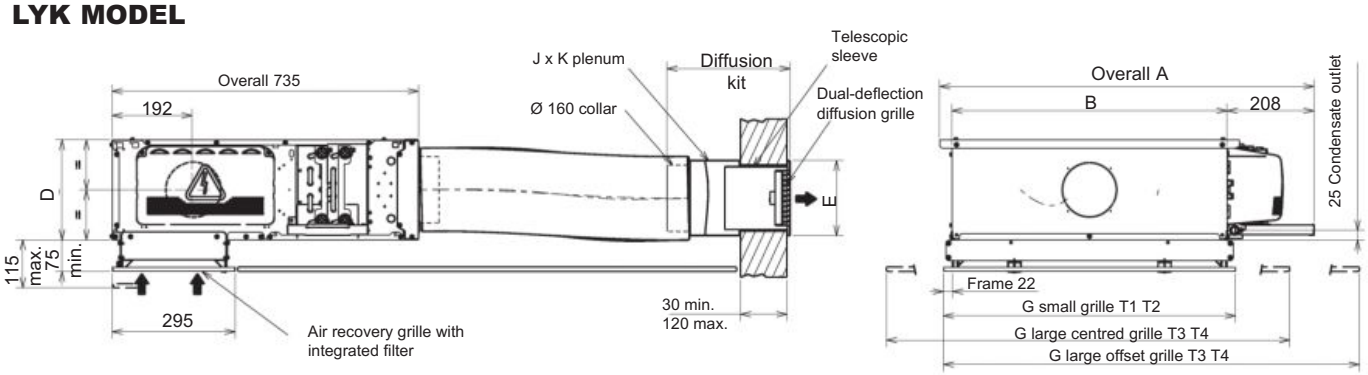

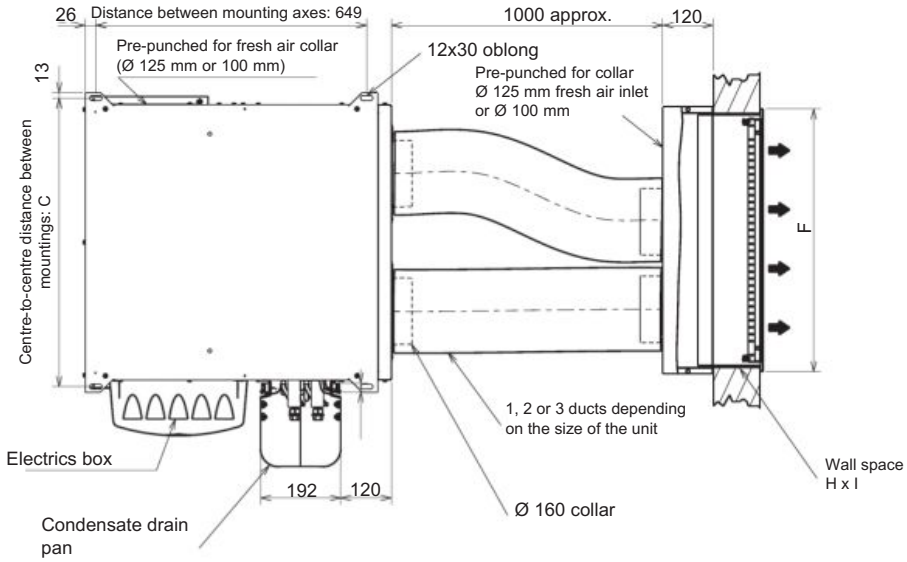

	A	B	C	D	E	F	G	H	I	J	K	No. of ducts
T1 (1V)	898	660	692	215	200	650	700	175	625	180	440	1
T1 (2V)											640	2
T2 (2V)				245	230			205				
T3 (3V)	1205	960	992			950	1195		925		840	3
T4 (3V)				280	265			240				

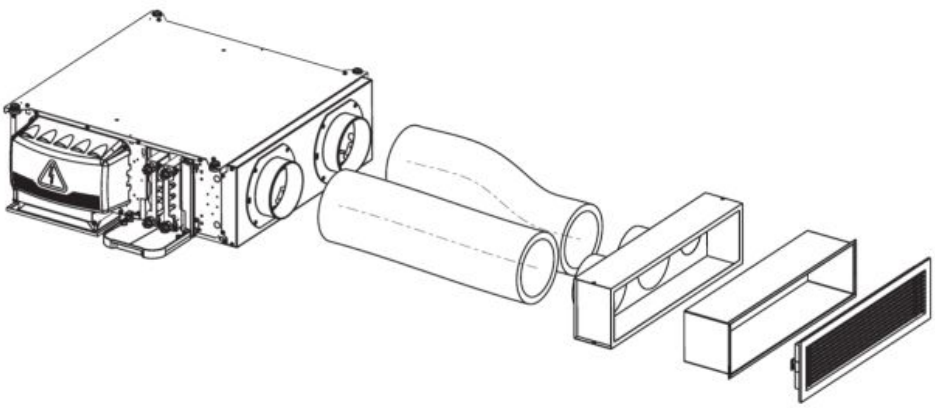

NOTE: For COMFORT LINE LY Ø160, sizes 3 and 4, speed 5 must not be selected (air flow too high for Ø160 collars).

Motor electrical data notes

	Motor speed	AC asynchronous motor							HEE brushless motor						
		T0	T1	T2	T3	T4	T5*	T6 *	T0	T1	T2	T3	T4	T5	T6 *
Max. power input (W)	V5	71	74	119	166	180	223	611	48	37	72	113	97	172	343
	V4	48	48	104	124	125	192	523	26	22	54	47	38	117	330
	V3	34	42	88	111	110	163	455	13	14	36	27	22	67	307
	V2	21	36	67	96	95	149	391	6	8	14	14	13	36	178
	V1	14	34	51	93	90	129	333	4	5	6	9	8	17	110
Max. input current (A)	V5	0,31	0,32	0,53	0,7	0,77	0,95	2,68	0,37	0,25	0,47	0,69	0,61	1,06	2,59
	V4	0,20	0,22	0,45	0,52	0,53	0,81	2,32	0,20	0,16	0,36	0,3	0,25	0,73	2,36
	V3	0,15	0,2	0,38	0,47	0,48	0,69	2,02	0,12	0,11	0,25	0,18	0,15	0,43	2,22
	V2	0,09	0,18	0,29	0,42	0,42	0,64	1,73	0,07	0,07	0,11	0,1	0,1	0,24	1,32
	V1	0,07	0,18	0,22	0,41	0,4	0,57	1,48	0,06	0,06	0,06	0,07	0,07	0,12	0,75

NB: Specifications given for a 230V +/-10% - 50 Hz power supply. Values with outlet open
For operation at 60 Hz, the power input and rotation speed values are generally higher.
Motor operating range: min. return T°C: 0°C, max. return T°C: 40°C

Coil contents

	Cooling coil	Heating coil	
		2T	4T
02B	0,35	0,35	
04B	0,38		0,15
12B/14B	0,47	0,47	0,18
12D/14D	0,64	0,64	0,26
12E	0,89		
22C/24C	0,65	0,65	0,18
22D/24D	0,82	0,82	0,26
22E	1,07		
32C/34C	0,91	0,91	0,25
32D/34D	1,15	1,15	0,37
32E	1,51		
42C/44C	1,9	1,9	0,46
42D/44D	2,34	2,34	0,46
42E	3,22		
52C/54C	2,43	2,43	0,59
52D/54D	3	3	0,59
52E	4,15		
62B/64B	3,07	3,07	1,64
62D/64D	4,5	4,5	1,65
62E	5,93		

Coil coupling diameters

Coil coupling type: flat face swivel nuts with a female thread

Valve outlet coupling type: "male flat face" threaded couplings to be used

		T0	T1	T2	T3	T4	T5	T6
2-tube system	Hot or cold water coil	G 1/2"	G 1/2"	G 1/2"	G 1/2"	G3/4"	G3/4"	G3/4"
4-tube system	Cold water coil	G 1/2"	G 1/2"	G 1/2"	G 1/2"	G3/4"	G3/4"	G3/4"
	Hot water coil	G 1/2"	G 1/2"	G 1/2"	G 1/2"	G 1/2"	G 1/2"	G3/4"

Weight

	Weight (kg)						
	T0	T1	T2	T3	T4	T5	T6
I	15	25	27	36	39	47	65
Y	15,5	27	29	39	42	51	69
H compact	16	29	31	42	45	-	-
H		34	34	46	49	60	78
U	21	35	38	51	57	-	-
U compact	18	30	32	-	-	-	-
LI	-	31	33	44	47	-	-
LY	-	33	35	47	50	-	-

PERFORMANCE

I MODEL

Cooling temperature: water temperature: 7/12°C, air intake temperature: 27°C - 19°C (WB)
Heating temperature (2T): water temperature: 45/40°C, air intake temperature: 20°C
Heating temperature (4T): water temperature: 65/55°C, air intake temperature: 20°C

COMFORT LINE Model I	AC motor speeds	HEE motor voltage (V)	Air flow in m³/h	Available static pressure (1)	Cooling cap. W		Heating capacity W	Power input		Overall sound power LW dB(A)	Comfort level ISO or NR	Average air temperature rise in K (2) Auxiliary electric heater 230/1/50	
					Total	Sensible		AC Motor W	HEE motor W				
												500W	1000W
02B/10B HEE	V5	8,4	505		2 500	2 120	3 000	68	46	60	43	3,0	5,8
	V4	6,7	400		2 170	1 800	2 560	46	25	54	37	3,7	7,4
	V3	5,4	310	10	1 850	1 490	2 130	33	14	48	31	4,8	9,5
	V2	3,7	220		1 410	1 090	1 570	20	7	40	23	6,8	13,4
	V1	2,6	145		1 170	824	1 150	14	4	32	15	10,1	20,3
04B/04D HEE	V5	8,4	505		2 460	2 150	2 990	68	46	60	43		
	V4	6,7	400		2 100	1 790	2 670	46	25	54	37		
	V3	5,4	310	10	1 700	1 430	2 320	33	14	48	31		
	V2	3,7	220		1 250	1 030	1 820	20	7	40	23		
	V1	2,6	145		1 030	766	1 590	14	4	32	15		
												500W	1000W
12B/12B HEE	V5	8,2	455		1 762	1 664	2 447	72	35	59	44	3,3	6,5
	V4	6,9	375		1 535	1 427	2 145	47	22	54	38	4,0	7,9
	V3	5,8	310	10	1 336	1 225	1 870	41	15	49	33	4,8	9,6
	V2	4,5	230		1 055	956	1 517	35	9	42	25	6,5	12,9
	V1	3,4	165		799	713	1 141	34	6	35	18	9,0	18,0
12D/12D HEE	V5	8,2	455		2 268	1 945	2 769	72	35	59	44	3,3	6,5
	V4	6,9	375		1 969	1 652	2 392	47	22	54	38	4,0	7,9
	V3	5,8	310	10	1 710	1 409	2 059	41	15	49	33	4,8	9,6
	V2	4,5	230		1 355	1 091	1 633	35	9	42	25	6,5	12,9
	V1	3,4	165		1 005	798	1 203	34	6	35	18	9,0	18,0
12E/12E HEE	V5	8,2	455		2 753	2 176	3 019	72	35	59	44	3,3	6,5
	V4	6,9	375		2 369	1 835	2 575	47	22	54	38	4,0	7,9
	V3	5,8	310	10	2 040	1 554	2 189	41	15	49	33	4,8	9,6
	V2	4,5	230		1 604	1 197	1 700	35	9	42	25	6,5	12,9
	V1	3,4	165		1 191	875	1 231	34	6	35	18	9,0	18,0
14B/14B HEE	V5	8,2	455		1 762	1 664	2 617	72	35	59	44		
	V4	6,9	375		1 535	1 427	2 383	47	22	54	38		
	V3	5,8	310	10	1 336	1 225	2 152	41	15	49	33		
	V2	4,5	230		1 055	956	1 817	35	9	42	25		
	V1	3,4	165		799	713	1 456	34	6	35	18		
14D/14D HEE	V5	8,2	455		2 326	1 971	3 772	72	35	59	44		
	V4	6,9	375		2 007	1 668	3 328	47	22	54	38		
	V3	5,8	310	10	1 735	1 418	2 912	41	15	49	33		
	V2	4,5	230		1 369	1 096	2 343	35	9	42	25		
	V1	3,4	165		1012	801	1 783	34	6	35	18		
												500W	1000W
22C/22C HEE	V5	7,9	730		3 390	3 107	4 385	115	71	62	46	2,0	4,1
	V4	7,3	670		3 192	2 881	4 101	100	54	59	43	2,2	4,4
	V3	6,4	580	10	2 883	2 557	3 685	86	38	56	40	2,6	5,1
	V2	4,5	395		2 149	1809	2 667	66	15	47	30	3,8	7,5
	V1	2,6	230		1364	1093	1 634	51	6	34	18	6,5	12,9
22D/22D HEE	V5	7,9	730		3 931	3 337	4 722	115	71	62	46	2,0	4,1
	V4	7,3	670		3 688	3 084	4 387	100	54	59	43	2,2	4,4
	V3	6,4	580	10	3 323	2 729	3 903	86	38	56	40	2,6	5,1
	V2	4,5	395		2 438	1 926	2 752	66	15	47	30	3,8	7,5
	V1	2,6	230		1530	1169	1 637	51	6	34	18	6,5	12,9
22E/22E HEE	V5	7,9	730		4 279	3 473	4 880	115	71	62	46	2,0	4,1
	V4	7,3	670		4 003	3 209	4 533	100	54	59	43	2,2	4,4
	V3	6,4	580	10	3 599	2 839	4 030	86	38	56	40	2,6	5,1
	V2	4,5	395		2 638	2 007	2 844	66	15	47	30	3,8	7,5
	V1	2,6	230		1 656	1219	1 701	51	6	34	18	6,5	12,9
24C/24C HEE	V5	7,9	730		3 390	3 107	3 150	115	71	62	46		
	V4	7,3	670		3 192	2 881	3 043	100	54	59	43		
	V3	6,4	580	10	2 883	2 557	2 875	86	38	56	40		
	V2	4,5	395		2 149	1809	2 396	66	15	47	30		
	V1	2,6	230		1364	1093	1 752	51	6	34	18		
24D/24D HEE	V5	7,9	730		4 036	3 377	4 339	115	71	62	46		
	V4	7,3	670		3 767	3 115	4 172	100	54	59	43		
	V3	6,4	580	10	3 384	2 753	3 913	86	38	56	40		
	V2	4,5	395		2 463	1 936	3 192	66	15	47	30		
	V1	2,6	230		1533	1171	2 266	51	6	34	18		
												700W	1400W
32C/32C HEE	V5	8,2	1145		5 227	4 604	7 200	156	110	64	47	1,8	3,6
	V4	6,4	875		4 468	3 787	5 703	118	51	58	41	2,4	4,8
	V3	5,3	710	10	3 924	3 237	4 721	108	30	54	37	2,9	5,9
	V2	4,1	525		3 154	2516	3 544	95	16	48	32	4,0	7,9
	V1	3,3	400		2594	2021	2 754	92	10	43	27	5,2	10,4
32D/32D HEE	V5	8,2	1145		5 851	4 973	7 759	156	110	64	47	1,8	3,6
	V4	6,4	875		4 890	4 016	6 103	118	51	58	41	2,4	4,8
	V3	5,3	710	10	4 222	3 386	5 024	108	30	54	37	2,9	5,9
	V2	4,1	525		3 355	2 608	3 746	95	16	48	32	4,0	7,9
	V1	3,3	400		2726	2075	2 899	92	10	43	27	5,2	10,4
32E/32E HEE	V5	8,2	1145		6 107	5 049	7 806	156	110	64	47	1,8	3,6
	V4	6,4	875		5 088	4 078	6 107	118	51	58	41	2,4	4,8
	V3	5,3	710	10	4 366	3 431	5 008	108	30	54	37	2,9	5,9
	V2	4,1	525		3 449	2 640	3 717	95	16	48	32	4,0	7,9
	V1	3,3	400		2 797	2105	2 865	92	10	43	27	5,2	10,4
34C/34C HEE	V5	8,2	1145		5 227	4 604	5 070	156	110	64	47		
	V4	6,4	875		4 468	3 787	4 502	118	51	58	41		
	V3	5,3	710	10	3 924	3 237	4 060	108	30	54	37		
	V2	4,1	525		3 154	2516	3 434	95	16	48	32		
	V1	3,3	400		2594	2021	2 928	92	10	43	27		
34D/34D HEE	V5	8,2	1145		6 021	5 052	6 875	156	110	64	47		
	V4	6,4	875		4 993	4 059	6 019	118	51	58	41		
	V3	5,3	710	10	4 287	3 411	5 369	108	30	54	37		
	V2	4,1	525		3 391	2 621	4 470	95	16	48	32		
	V1	3,3	400		2753	2086	3 761	92	10	43	27		

(1) Static pressures given for information purposes. For higher available static pressures, consult our sales office
(2) Warning: the air supply temperature must not exceed 65°C (CIAT recommendation)

I model sound level:
Values given as a guideline for devices with non-ducted return and with ducted discharge, and for room and installation attenuation of 12 dB (sizes 0 to 3), 14 dB (sizes 4 & 5) and 16 dB (size 6).

I MODEL (continued)

COMFORT LINE Model I	AC motor speeds	HEE motor voltage (V)	Air flow in m³/h	Available static pressure (1)	Cooling cap. W		Heating capacity W	Power input		Overall sound power LW dB(A)	Comfort level ISO or NR	Average air temperature rise in K (2) Auxiliary electric heater 230/1/50	
					Total	Sensible		AC Motor W	HEE motor W				
												700W	1400W
42C/42C HEE	V5	7,8	1 160		6 021	5 171	7 377	167	103	63	45	1,7	3,4
	V4	5,9	850		4 923	4 005	5 688	120	44	57	38	2,4	4,7
	V3	4,8	690	10	4 245	3 359	4 728	109	26	52	34	2,9	5,9
	V2	3,7	515		3 387	2 601	3 625	94	14	47	29	3,9	7,8
	V1	2,9	390		2 711	2 037	2 797	89	9	43	25	5,2	10,4
42D/42D HEE	V5	7,8	1 160		6 974	5 573	7 881	167	103	63	45	1,7	3,4
	V4	5,9	850		5 593	4 286	6 004	120	44	57	38	2,4	4,7
	V3	4,8	690	10	4 759	3 576	4 956	109	26	52	34	2,9	5,9
	V2	3,7	515		3 751	2 758	3 765	94	14	47	29	3,9	7,8
	V1	2,9	390		2 977	2 156	2 885	89	9	43	25	5,2	10,4
42E/42E HEE	V5	7,8	1 160		7 425	5 750	8 063	167	103	63	45	1,7	3,4
	V4	5,9	850		5 888	4 406	6 100	120	44	57	38	2,4	4,7
	V3	4,8	690	10	4 992	3 672	5 016	109	26	52	34	2,9	5,9
	V2	3,7	515		3 913	2 826	3 794	94	14	47	29	3,9	7,8
	V1	2,9	390		3 092	2 204	2 899	89	9	43	25	5,2	10,4
44C/44C HEE	V5	7,8	1 160		6 021	5 171	5 525	167	103	63	45		
	V4	5,9	850		4 923	4 005	4 793	120	44	57	38		
	V3	4,8	690	10	4 245	3 359	4 305	109	26	52	34		
	V2	3,7	515		3 387	2 601	3 651	94	14	47	29		
	V1	2,9	390		2 711	2 037	3 070	89	9	43	25		
44D/44D HEE	V5	7,8	1 160		7 106	5 626	5 498	167	103	63	45		
	V4	5,9	850		5 668	4 316	4 749	120	44	57	38		
	V3	4,8	690	10	4 809	3 596	4 256	109	26	52	34		
	V2	3,7	515		3 787	2 774	3 599	94	14	47	29		
	V1	2,9	390		2 997	2 167	3 021	89	9	43	25		
												1200W	2400W
52C/52C HEE	V5	8,1	1 595		8 156	6 848	9 634	217	163	68	43	2,2	4,5
	V4	7,4	1 440		7 645	6 320	8 919	186	115	66	40	2,5	5,0
	V3	6,3	1 240	10	6 924	5 603	7 933	159	69	62	36	2,9	5,7
	V2	5,1	1 010		6 033	4 747	6 690	146	38	57	32	3,5	7,1
	V1	3,7	720		4 727	3 592	5 017	127	18	51	26	5,0	9,9
52D/52D HEE	V5	8,1	1 595		8 758	7 193	10 273	217	163	68	43	2,2	4,5
	V4	7,4	1 440		8 176	6 616	9 478	186	115	66	40	2,5	5,0
	V3	6,3	1 240	10	7 350	5 838	8 379	159	69	62	36	2,9	5,7
	V2	5,1	1 010		6 314	4 908	7 020	146	38	57	32	3,5	7,1
	V1	3,7	720		4 870	3 679	5 219	127	18	51	26	5,0	9,9
52E/52E HEE	V5	8,1	1 595		10 136	7 807	10 989	217	163	68	43	2,2	4,5
	V4	7,4	1 440		9 402	7 155	10 077	186	115	66	40	2,5	5,0
	V3	6,3	1 240	10	8 389	6 288	8 838	159	69	62	36	2,9	5,7
	V2	5,1	1 010		7 128	5 257	7 331	146	38	57	32	3,5	7,1
	V1	3,7	720		5 414	3 913	5 379	127	18	51	26	5,0	9,9
54C/54C HEE	V5	8,1	1 595		8 156	6 848	7 390	217	163	68	43		
	V4	7,4	1 440		7 645	6 320	7 092	186	115	66	40		
	V3	6,3	1 240	10	6 924	5 603	6 649	159	69	62	36		
	V2	5,1	1 010		6 033	4 747	6 031	146	38	57	32		
	V1	3,7	720		4 727	3 592	5 056	127	18	51	26		
54D/54D HEE	V5	8,1	1 595		9 054	7 334	7 356	217	163	68	43		
	V4	7,4	1 440		8 439	6 738	7 048	186	115	66	40		
	V3	6,3	1 240	10	7 572	5 937	6 593	159	69	62	36		
	V2	5,1	1 010		6 487	4 984	5 964	146	38	57	32		
	V1	3,7	720		4 981	3 730	4 984	127	18	51	26		
												1200W	2400W
62B/62B HEE	V5	8	3 005		11 988	10 434	14 366	590	351	76	57	1,2	2,4
	V4	6,9	2 910		11 212	9 674	13 333	504	339	73	53	1,2	2,5
	V3	6,4	2 740	10	10 419	8 900	12 247	445	300	71	51	1,3	2,6
	V2	5,3	2 255		9 603	8 102	11 106	387	172	67	47	1,6	3,2
	V1	4,6	1 900		8 700	7 246	9 947	329	108	63	44	1,9	3,8
62D/62D HEE	V5	8	3 005		14 774	12 047	16 434	590	351	76	57	1,2	2,4
	V4	6,9	2 910		13 715	11 064	15 120	504	339	73	53	1,2	2,5
	V3	6,4	2 740	10	12 660	10 089	13 757	445	300	71	51	1,3	2,6
	V2	5,3	2 255		11 518	9 065	12 352	387	172	67	47	1,6	3,2
	V1	4,6	1 900		10 345	8 032	10 945	329	108	63	44	1,9	3,8
62E/62E HEE	V5	8	3 005		17 159	13 299	18 091	590	351	76	57	1,2	2,4
	V4	6,9	2 910		15 822	12 130	16 523	504	339	73	53	1,2	2,5
	V3	6,4	2 740	10	14 446	10 960	14 911	445	300	71	51	1,3	2,6
	V2	5,3	2 255		13 022	9 771	13 277	387	172	67	47	1,6	3,2
	V1	4,6	1 900		11 550	8 577	11 667	329	108	63	44	1,9	3,8
64B/64B HEE	V5	8	3 005		11 988	10 434	17 920	590	351	76	57		
	V4	6,9	2 910		11 212	9 674	16 925	504	339	73	53		
	V3	6,4	2 740	10	10 419	8 900	15 846	445	300	71	51		
	V2	5,3	2 255		9 603	8 102	14 676	387	172	67	47		
	V1	4,6	1 900		8 700	7 246	13 449	329	108	63	44		
64D/64D HEE	V5	8	3 005		15 178	12 275	17 885	590	351	76	57		
	V4	6,9	2 910		14 082	11 263	16 865	504	339	73	53		
	V3	6,4	2 740	10	12 971	10 252	15 763	445	300	71	51		
	V2	5,3	2 255		11 798	9 204	14 573	387	172	67	47		
	V1	4,6	1 900		10 555	8 131	13 332	329	108	63	44		

(1) Static pressures given for information purposes. For higher available static pressures, consult our sales office
(2) Warning: the air supply temperature must not exceed 65°C (CIAT recommendation)

I model sound level:
Values given as a guideline for devices with non-ducted return and with ducted discharge, and for room and installation attenuation of 12 dB (sizes 0 to 3), 14 dB (sizes 4 & 5) and 16 dB (size 6).

Y MODEL

Cooling temperature: water temperature: 7/12°C, air intake temperature: 27°C - 19°C (WB)
Heating temperature (2T): water temperature: 45/40°C, air intake temperature: 20°C
Heating temperature (4T): water temperature: 65/55°C, air intake temperature: 20°C

COMFORT LINE Model Y	AC motor speeds	HEE motor voltage (V)	Air flow in m³/h	Available static pressure (1)	Cooling cap. W		Heating capacity W	Power input		Overall sound power LW dB(A)	Comfort level ISO or NR	Average air temperature rise in K (2) Auxiliary electric heater 230/1/50	
					Total	Sensible		AC Motor W	HEE motor W				
												500W	1000W
02B/10B HEE	V5	8,5	440		2 330	1 950	2 740	66	44	60	41	3,4	6,7
	V4	7,0	360		2 040	1 670	2 360	44	25	55	36	4,1	8,2
	V3	5,7	285	20	1 750	1 390	1 980	32	15	49	30	5,2	10,4
	V2	3,9	200		1 330	1 020	1 470	20	8	41	22	7,4	14,7
	V1	2,7	136		1 100	773	1 070	14	4	33	P<15	10,8	21,6
04B/04D HEE	V5	8,5	440		2 270	1 960	2 810	66	44	60	41		
	V4	7,0	360		1 950	1 650	2 520	44	25	55	36		
	V3	5,7	285	20	1 590	1 330	2 200	32	15	49	30		
	V2	3,9	200		1 170	959	1 720	20	8	41	22		
	V1	2,7	136		956	715	1 490	14	4	33	P<15		
												500W	1000W
12B/12B HEE	V5	8,5	380		1 564	1 454	2 132	70	34	59	42	3,9	7,8
	V4	7,2	320		1 372	1 261	1 906	45	23	54	37	4,6	9,3
	V3	6,2	270	20	1 202	1 094	1 699	39	16	50	32	5,5	11,0
	V2	4,8	210		960	870	1 395	35	9	44	24	7,1	14,1
	V1	3,6	150		762	669	1 057	34	6	37	18	9,9	19,8
12D/12D HEE	V5	8,5	380		1 997	1 679	2 379	70	34	59	42	3,9	7,8
	V4	7,2	320		1 756	1 451	2 105	45	23	54	37	4,6	9,3
	V3	6,2	270	20	1 535	1 251	1 849	39	16	50	32	5,5	11,0
	V2	4,8	210		1 239	992	1 490	35	9	44	24	7,1	14,1
	V1	3,6	150		926	735	1 110	34	6	37	18	9,9	19,8
12E/12E HEE	V5	8,5	380		2 398	1 863	2 561	70	34	59	42	3,9	7,8
	V4	7,2	320		2 098	1 603	2 243	45	23	54	37	4,6	9,3
	V3	6,2	270	20	1 823	1 375	1 946	39	16	50	32	5,5	11,0
	V2	4,8	210		1 464	1086	1 541	35	9	44	24	7,1	14,1
	V1	3,6	150		1 101	808	1 132	34	6	37	18	9,9	19,8
14B/14B HEE	V5	8,5	380		1 564	1 454	2 375	70	34	59	42		
	V4	7,2	320		1 372	1 261	2 188	45	23	54	37		
	V3	6,2	270	20	1 202	1 094	1 988	39	16	50	32		
	V2	4,8	210		960	870	1 700	35	9	44	24		
	V1	3,6	150		762	669	1 371	34	6	37	18		
14D/14D HEE	V5	8,5	380		2 035	1 695	3 319	70	34	59	42		
	V4	7,2	320		1 783	1 462	2 977	45	23	54	37		
	V3	6,2	270	20	1 555	1 258	2 629	39	16	50	32		
	V2	4,8	210		1 251	996	2 157	35	9	44	24		
	V1	3,6	150		932	738	1 659	34	6	37	18		
												500W	1000W
22C/22C HEE	V5	8,1	675		3 218	2 908	4 113	112	70	61	43	2,2	4,4
	V4	7,5	620		3 027	2 707	3 869	97	55	59	41	2,4	4,8
	V3	6,7	545	20	2 751	2 419	3 497	84	39	56	38	2,7	5,4
	V2	4,7	380		2 074	1738	2 567	65	16	47	28	3,9	7,8
	V1	2,7	220		1317	1054	1 573	51	6	35	16	6,8	13,5
22D/22D HEE	V5	8,1	675		3 717	3 113	4 402	112	70	61	43	2,2	4,4
	V4	7,5	620		3 490	2 892	4 117	97	55	59	41	2,4	4,8
	V3	6,7	545	20	3 160	2 578	3 689	84	39	56	38	2,7	5,4
	V2	4,7	380		2 350	1851	2 641	65	16	47	28	3,9	7,8
	V1	2,7	220		1 477	1127	1 573	51	6	35	16	6,8	13,5
22E/22E HEE	V5	8,1	675		4 033	3 238	4 549	112	70	61	43	2,2	4,4
	V4	7,5	620		3 787	3 010	4 252	97	55	59	41	2,4	4,8
	V3	6,7	545	20	3 422	2 683	3 809	84	39	56	38	2,7	5,4
	V2	4,7	380		2 544	1929	2 730	65	16	47	28	3,9	7,8
	V1	2,7	220		1 599	1175	1 636	51	6	35	16	6,8	13,5
24C/24C HEE	V5	8,1	675		3 218	2 908	3 047	112	70	61	43		
	V4	7,5	620		3 027	2 707	2 951	97	55	59	41		
	V3	6,7	545	20	2 751	2 419	2 795	84	39	56	38		
	V2	4,7	380		2 074	1738	2 342	65	16	47	28		
	V1	2,7	220		1 317	1054	1 707	51	6	35	16		
24D/24D HEE	V5	8,1	675		3 797	3 144	4 179	112	70	61	43		
	V4	7,5	620		3 562	2 920	4 030	97	55	59	41		
	V3	6,7	545	20	3 215	2 600	3 792	84	39	56	38		
	V2	4,7	380		2 374	1860	3 112	65	16	47	28		
		2,7	220		1 479	1128	2 203	51	6	35	16		
												700W	1400W
32C/32C HEE	V5	8,4	1030		4 927	4 274	6 561	147	107	64	45	2,0	4,0
	V4	6,8	815		4 281	3 590	5 338	113	55	58	39	2,6	5,1
	V3	5,7	670	20	3 772	3 091	4 478	105	34	54	35	3,1	6,2
	V2	4,3	500		3 045	2417	3 386	94	17	48	30	4,2	8,3
	V1	3,5	385		2 506	1944	2 635	91	11	43	25	5,4	10,8
32D/32D HEE	V5	8,4	1030		5 472	4 585	7 052	147	107	64	45	2,0	4,0
	V4	6,8	815		4 651	3 784	5 702	113	55	58	39	2,6	5,1
	V3	5,7	670	20	4 046	3 225	4 758	105	34	54	35	3,1	6,2
	V2	4,3	500		3 230	2500	3 577	94	17	48	30	4,2	8,3
	V1	3,5	385		2 623	1992	2 771	91	11	43	25	5,4	10,8
32E/32E HEE	V5	8,4	1030		5 695	4 650	7 079	147	107	64	45	2,0	4,0
	V4	6,8	815		4 819	3 836	5 698	113	55	58	39	2,6	5,1
	V3	5,7	670	20	4 183	3 269	4 739	105	34	54	35	3,1	6,2
	V2	4,3	500		3 321	2533	3 546	94	17	48	30	4,2	8,3
	V1	3,5	385		2 695	2022	2 737	91	11	43	25	5,4	10,8
34C/34C HEE	V5	8,4	1030		4 927	4 274	4 839	147	107	64	45		
	V4	6,8	815		4 281	3 590	4 344	113	55	58	39		
	V3	5,7	670	20	3 772	3 091	3 940	105	34	54	35		
	V2	4,3	500		3 045	2417	3 339	94	17	48	30		
	V1	3,5	385		2 506	1944	2 845	91	11	43	25		
34D/34D HEE	V5	8,4	1030		5 607	4 645	6 526	147	107	64	45		
	V4	6,8	815		4 733	3 817	5 785	113	55	58	39		
	V3	5,7	670	20	4 105	3 247	5 194	105	34	54	35		
	V2	4,3	500		3 264	2514	4 334	94	17	48	30		
	V1	3,5	385		2 651	2004	3 646	91	11	43	25		

(1) Static pressures given for information purposes. For higher available static pressures, consult our sales office
(2) Warning: the air supply temperature must not exceed 65°C (CIAT recommendation)
Y model sound level:
Values given as a guideline for devices with non-ducted return and with ducted discharge, and for room and installation attenuation of 14 dB (sizes 0 to 3), 16 dB (sizes 4 & 5) and 18 dB (size 6)

Y MODEL (continued)

COMFORT LINE Model Y	AC motor speeds	HEE motor voltage (V)	Air flow in m³/h	Available static pressure (1)	Cooling cap. W		Heating capacity W	Power input		Overall sound power LW dB(A)	Comfort level ISO or NR	Average air temperature rise in K (2) Auxiliary electric heater 230/1/50	
					Total	Sensible		AC Motor W	HEE motor W				
												700W	1400W
42C/42C HEE	V5	8,2	1025		5 594	4 688	6 647	156	103	63	43	1,9	3,7
	V4	6,4	780		4 642	3 732	5 280	115	48	57	36	2,5	5,0
	V3	5,3	645	20	4 042	3 173	4 449	107	29	53	33	3,1	6,1
	V2	4	485		3 221	2 461	3 418	94	16	47	27	4,1	8,2
	V1	3,1	370		2 588	1 937	2 649	89	10	43	23	5,4	10,8
42D/42D HEE	V5	8,2	1025		6 407	5 030	7 064	156	103	63	43	1,9	3,7
	V4	6,4	780		5 246	3 985	5 557	115	48	57	36	2,5	5,0
	V3	5,3	645	20	4 511	3 371	4 652	107	29	53	33	3,1	6,1
	V2	4	485		3 560	2 608	3 543	94	16	47	27	4,1	8,2
	V1	3,1	370		2 834	2 048	2 729	89	10	43	23	5,4	10,8
42E/42E HEE	V5	8,2	1025		6 788	5 182	7 206	156	103	63	43	1,9	3,7
	V4	6,4	780		5 516	4 096	5 637	115	48	57	36	2,5	5,0
	V3	5,3	645	20	4 726	3 460	4 704	107	29	53	33	3,1	6,1
	V2	4	485		3 710	2 670	3 568	94	16	47	27	4,1	8,2
	V1	3,1	370		2 943	2 093	2 742	89	10	43	23	5,4	10,8
44C/44C HEE	V5	8,2	1025		5 594	4 688	5 224	156	103	63	43		
	V4	6,4	780		4 642	3 732	4 594	115	48	57	36		
	V3	5,3	645	20	4 042	3 173	4 150	107	29	53	33		
	V2	4	485		3 221	2 461	3 513	94	16	47	27		
	V1	3,1	370		2 588	1 937	2 956	89	10	43	23		
44D/44D HEE	V5	8,2	1025		6 502	5 068	5 190	156	103	63	43		
	V4	6,4	780		5 311	4 011	4 547	115	48	57	36		
	V3	5,3	645	20	4 557	3 390	4 100	107	29	53	33		
	V2	4	485		3 591	2 622	3 462	94	16	47	27		
	V1	3,1	370		2 854	2 059	2 909	89	10	43	23		
												1200W	2400W
52C/52C HEE	V5	8,2	1495		7 839	6 519	9 164	211	157	66	45	2,4	4,8
	V4	7,6	1360		7 362	6 039	8 528	180	113	64	43	2,6	5,2
	V3	6,6	1180	20	6 704	5 389	7 624	154	71	61	39	3,0	6,0
	V2	5,4	970		5 881	4 608	6 493	143	40	56	35	3,7	7,3
	V1	4	700		4 631	3 511	4 901	125	19	50	30	5,1	10,2
52D/52D HEE	V5	8,2	1495		8 401	6 835	9 748	211	157	66	45	2,4	4,8
	V4	7,6	1360		7 860	6 313	9 038	180	113	64	43	2,6	5,2
	V3	6,6	1180	20	7 092	5 603	8 041	154	71	61	39	3,0	6,0
	V2	5,4	970		6 144	4 759	6 806	143	40	56	35	3,7	7,3
	V1	4	700		4 766	3 593	5 095	125	19	50	30	5,1	10,2
52E/52E HEE	V5	8,2	1495		9 674	7 398	10 387	211	157	66	45	2,4	4,8
	V4	7,6	1360		9 004	6 814	9 583	180	113	64	43	2,6	5,2
	V3	6,6	1180	20	8 079	6 030	8 461	154	71	61	39	3,0	6,0
	V2	5,4	970		6 924	5 094	7 095	143	40	56	35	3,7	7,3
	V1	4	700		5 294	3 820	5 248	125	19	50	30	5,1	10,2
54C/54C HEE	V5	8,2	1495		7 839	6 519	7 194	211	157	66	45		
	V4	7,6	1360		7 362	6 039	6 920	180	113	64	43		
	V3	6,6	1180	20	6 704	5 389	6 504	154	71	61	39		
	V2	5,4	970		5 881	4 608	5 925	143	40	56	35		
	V1	4	700		4 631	3 511	4 981	125	19	50	30		
54D/54D HEE	V5	8,2	1495		8 677	6 965	7 154	211	157	66	45		
	V4	7,6	1360		8 110	6 427	6 871	180	113	64	43		
	V3	6,6	1180	20	7 305	5 697	6 445	154	71	61	39		
	V2	5,4	970		6 308	4 831	5 857	143	40	56	35		
	V1	4	700		4 872	3 642	4 909	125	19	50	30		
												1200W	2400W
62B/62B HEE	V5	8	2910		11 717	10 165	13 953	570	357	73	52	1,2	2,4
	V4	6,9	2740		10 978	9 448	13 023	487	339	71	49	1,3	2,6
	V3	6,4	2555	20	10 264	8 751	12 043	433	287	69	47	1,4	2,8
	V2	5,3	2080		9 507	8 011	10 981	381	163	66	44	1,7	3,4
	V1	4,6	1765		8 652	7 190	9 854	325	105	63	41	2,0	4,0
62D/62D HEE	V5	8	2910		14 373	11 675	15 914	570	357	76	49	1,2	2,4
	V4	6,9	2740		13 406	10 780	14 728	487	339	73	46	1,3	2,6
	V3	6,4	2555	20	12 456	9 904	13 504	433	287	71	44	1,4	2,8
	V2	5,3	2080		11 392	8 953	12 199	381	163	66	40	1,7	3,4
	V1	4,6	1765		10 248	7 949	10 832	325	105	63	37	2,0	4,0
62E/62E HEE	V5	8	2910		16 657	12 858	17 466	570	357	76	49	1,2	2,4
	V4	6,9	2740		15 432	11 794	16 059	487	339	73	46	1,3	2,6
	V3	6,4	2555	20	14 193	10 745	14 614	433	287	71	44	1,4	2,8
	V2	5,3	2080		12 863	9 640	13 101	381	163	66	40	1,7	3,4
	V1	4,6	1765		11 432	8 482	11 539	325	105	63	37	2,0	4,0
64B/64B HEE	V5	8	2910		11 717	10 165	17 534	570	357	76	49		
	V4	6,9	2740		10 978	9 448	16 619	487	339	73	46		
	V3	6,4	2555	20	10 264	8 751	15 641	433	287	71	44		
	V2	5,3	2080		9 507	8 011	14 545	381	163	66	40		
	V1	4,6	1765		8 652	7 190	13 348	325	105	63	37		
64D/64D HEE	V5	8	2765		14 785	11 905	17 489	570	357	75	48		
	V4	6,9	2740		13 754	10 966	16 552	487	339	73	46		
	V3	6,4	2555	20	12 756	10 059	15 554	433	287	71	44		
	V2	5,3	2080		11 666	9 089	14 440	381	163	66	40		
	V1	4,6	1765		10 454	8 044	13 230	325	105	63	37		

(1) Static pressures given for information purposes. For higher available static pressures, consult our sales office
(2) Warning: the air supply temperature must not exceed 65°C (CIAT recommendation)

Y model sound level:
Values given as a guideline for devices with non-ducted return and with ducted discharge, and for room and installation attenuation of 14 dB (sizes 0 to 3), 16 dB (sizes 4 & 5) and 18 dB (size 6)

H and H Compact MODELS (H Compact sizes 0 to 3 only)

Cooling temperature: water temperature: 7/12°C, air intake temperature: 27°C - 19°C (WB)
Heating temperature (2T): water temperature: 45/40°C, air intake temperature: 20°C
Heating temperature (4T): water temperature: 65/55°C, air intake temperature: 20°C

COMFORT LINE H model	AC motor speeds	HEE motor voltage (V)	Air flow in m³/h	Available static pressure (1)	Cooling cap. W Total	Cooling cap. W Sensible	Heating capacity W	Power input AC Motor W	Power input HEE motor W	Overall sound power LW dB(A)	Comfort level ISO or NR	Average air temperature rise in K (2) Auxiliary electric heater 230/1/50	
												500W	1000W
02B/10B HEE	V5	8,0	315	40	1 900	1 530	2 120	62	31	58	35	1,7	9,3
	V4	6,8	270		1 690	1 340	1 880	42	21	54	31	5,4	10,9
	V3	5,7	225		1 460	1 140	1 620	31	13	49	26	6,5	13,1
	V2	4,0	160		1 110	837	1 200	20	7	41	18	9,2	18,4
	V1	2,7	110		898	634	875	14	4	32	<15	13,4	26,7
04B/04D HEE	V5	8,0	315	40	1 800	1 510	2 320	62	31	58	35		
	V4	6,8	270		1 580	1 300	2 110	42	21	54	31		
	V3	5,7	225		1 310	1 080	1 870	31	13	49	26		
	V2	4,0	160		950	774	1 450	20	7	41	18		
	V1	2,7	110		801	594	1 220	14	4	32	<15		
												500W	1000W
12B/12B HEE	V5	8,0	230	40	1 092	988	1 482	67	24	56	34	6,5	12,9
	V4	7,2	205		968	876	1 384	42	18	53	31	7,2	14,5
	V3	6,3	185		857	777	1 249	37	14	49	27	8,0	16,1
	V2	5,2	150		762	669	1 060	33	9	44	21	9,9	19,8
	V1	4,0	115		664	550	830	32	6	37	<15	12,9	25,8
12D/12D HEE	V5	8,0	230	40	1 387	1 121	1 596	67	24	56	34	6,5	12,9
	V4	7,2	205		1 245	997	1 478	42	18	53	31	7,2	14,5
	V3	6,3	185		1 109	883	1 323	37	14	49	27	8,0	16,1
	V2	5,2	150		927	736	1 113	33	9	44	21	9,9	19,8
	V1	4,0	115		759	589	864	32	6	37	<15	12,9	25,8
12E/12E HEE	V5	8,0	230	40	1 633	1 225	1 663	67	24	56	34	6,5	12,9
	V4	7,2	205		1 469	1 091	1 529	42	18	53	31	7,2	14,5
	V3	6,3	185		1 310	967	1 360	37	14	49	27	8,0	16,1
	V2	5,2	150		1 103	809	1 136	33	9	44	21	9,9	19,8
	V1	4,0	115		860	631	875	32	6	37	<15	12,9	25,8
14B/14B HEE	V5	8,0	230	40	1 092	988	1 792	67	24	56	34		
	V4	7,2	205		968	876	1 692	42	18	53	31		
	V3	6,3	185		857	777	1 561	37	14	49	27		
	V2	5,2	150		762	669	1 374	33	9	44	21		
	V1	4,0	115		664	550	1 132	32	6	37	<15		
14D/14D HEE	V5	8,0	230	40	1 401	1 126	2 311	67	24	56	34		
	V4	7,2	205		1 256	1 001	2 145	42	18	53	31		
	V3	6,3	185		1 118	887	1 941	37	14	49	27		
	V2	5,2	150		933	739	1 663	33	9	44	21		
	V1	4,0	115		761	589	1 325	32	6	37	<15		
												500W	1000W
22C/22C HEE	V5	7,7	540	40	2 740	2 408	3 435	105	52	58	36	2,8	5,5
	V4	7,2	505		2 607	2 271	3 274	91	43	57	34	2,9	5,9
	V3	6,6	455		2 399	2 061	3 004	79	33	54	32	3,3	6,5
	V2	4,7	325		1 842	1 519	2 250	63	14	46	23	4,6	9,1
	V1	2,7	190		1 160	923	1 374	50	6	33	<15	7,8	15,6
22D/22D HEE	V5	7,7	540	40	3 143	2 565	3 619	105	52	58	36	2,8	5,5
	V4	7,2	505		2 983	2 418	3 434	91	43	57	34	2,9	5,9
	V3	6,6	455		2 739	2 195	3 128	79	33	54	32	3,3	6,5
	V2	4,7	325		2 080	1 620	2 294	63	14	46	23	4,6	9,1
	V1	2,7	190		1 299	988	1 366	50	6	33	<15	7,8	15,6
22E/22E HEE	V5	7,7	540	40	3 402	2 669	3 738	105	52	58	36	2,8	5,5
	V4	7,2	505		3 236	2 519	3 547	91	43	57	34	2,9	5,9
	V3	6,6	455		2 971	2 288	3 232	79	33	54	32	3,3	6,5
	V2	4,7	325		2 248	1 688	2 374	63	14	46	23	4,6	9,1
	V1	2,7	190		1 411	1 032	1 423	50	6	33	<15	7,8	15,6
24C/24C HEE	V5	7,7	540	40	2 740	2 408	2 767	105	52	58	36		
	V4	7,2	505		2 607	2 271	2 695	91	43	57	34		
	V3	6,6	455		2 399	2 061	2 568	79	33	54	32		
	V2	4,7	325		1 842	1 519	2 160	63	14	46	23		
	V1	2,7	190		1 160	923	1 552	50	6	33	<15		
24D/24D HEE	V5	7,7	540	40	3 198	2 587	3 751	105	52	58	36		
	V4	7,2	505		3 034	2 438	3 642	91	43	57	34		
	V3	6,6	455		2 779	2 210	3 448	79	33	54	32		
	V2	4,7	325		2 095	1 626	2 847	63	14	46	23		
	V1	2,7	190		1 303	991	1 988	50	6	33	<15		
												700W	1400W
32C/32C HEE	V5	8,0	780	40	4 174	3 488	5 105	134	76	61	39	2,7	5,3
	V4	6,8	660		3 720	3 041	4 396	103	48	57	34	3,2	6,3
	V3	5,8	560		3 321	2 668	3 787	98	32	54	30	3,7	7,4
	V2	4,5	425		2 715	2 125	2 924	90	17	47	24	4,9	9,8
	V1	3,5	335		2 248	1 724	2 298	89	11	42	20	6,2	12,4
32D/32D HEE	V5	8,0	780	40	4 526	3 670	5 447	134	76	61	39	2,7	5,3
	V4	6,8	660		3 987	3 171	4 670	103	48	57	34	3,2	6,3
	V3	5,8	560		3 544	2 772	4 008	98	32	54	30	3,7	7,4
	V2	4,5	425		2 858	2 186	3 081	90	17	47	24	4,9	9,8
	V1	3,5	335		2 337	1 761	2 408	89	11	42	20	6,2	12,4
32E/32E HEE	V5	8,0	780	40	4 685	3 719	5 438	134	76	61	39	2,7	5,3
	V4	6,8	660		4 120	3 214	4 650	103	48	57	34	3,2	6,3
	V3	5,8	560		3 645	2 806	3 981	98	32	54	30	3,7	7,4
	V2	4,5	425		2 938	2 218	3 048	90	17	47	24	4,9	9,8
	V1	3,5	335		2 399	1 786	2 375	89	11	42	20	6,2	12,4
34C/34C HEE	V5	8,0	780	40	4 174	3 488	4 239	134	76	61	39		
	V4	6,8	660		3 720	3 041	3 900	103	48	57	34		
	V3	5,8	560		3 321	2 668	3 576	98	32	54	30		
	V2	4,5	425		2 715	2 125	3 044	90	17	47	24		
	V1	3,5	335		2 248	1 724	2 594	89	11	42	20		
34D/34D HEE	V5	8,0	780	40	4 605	3 701	5 633	134	76	61	39		
	V4	6,8	660		4 043	3 192	5 134	103	48	57	34		
	V3	5,8	560		3 585	2 787	4 668	98	32	54	30		
	V2	4,5	425		2 891	2 199	3 922	90	17	47	24		
	V1	3,5	335		2 358	1 769	3 300	89	11	42	20		

(1) Static pressures given for information purposes. For higher available static pressures, consult our sales office
(2) Warning: the air supply temperature must not exceed 65°C (CIAT recommendation)
H model sound level:
Values given as a guideline for devices with non-ducted return and with ducted discharge, and for room and installation attenuation of 18 dB (sizes 0 to 3), 20 dB (sizes 4 & 5) and 23 dB (size 6)

H and H Compact MODELS (H Compact size 4 only) (continued)

COMFORT LINE H model	AC motor speeds	HEE motor voltage (V)	Air flow in m³/h	Available static pressure (1)	Cooling cap. W		Heating capacity W	Power input		Overall sound power LW dB(A)	Comfort level ISO or NR	Average air temperature rise in K (2) Auxiliary electric heater 230/1/50	
					Total	Sensible		AC Motor W	HEE motor W				
												700W	1400W
42C/42C HEE	V5	7,9	755	40	4 537	3 637	5 079	141	73	61	36	2,3	4,7
	V4	6,5	625		3 932	3 076	4 306	106	43	56	31	3,0	5,9
	V3	5,6	535		3 484	2 685	3 732	101	29	53	28	3,6	7,1
	V2	4,3	405		2 797	2 108	2 897	91	16	47	23	4,7	9,5
	V1	3,3	315		2 258	1 673	2 264	87	10	42	18	6,1	12,2
42D/42D HEE	V5	7,9	755	40	5 118	3 881	5 337	141	73	61	36	2,3	4,7
	V4	6,5	625		4 383	3 267	4 497	106	43	56	31	3,0	5,9
	V3	5,6	535		3 862	2 847	3 880	101	29	53	28	3,6	7,1
	V2	4,3	405		3 074	2 231	2 990	91	16	47	23	4,7	9,5
	V1	3,3	315		2 464	1 771	2 326	87	10	42	18	6,1	12,2
42E/42E HEE	V5	7,9	755	40	5 376	3 987	5 411	141	73	61	36	2,3	4,7
	V4	6,5	625		4 589	3 352	4 544	106	43	56	31	3,0	5,9
	V3	5,6	535		4 030	2 917	3 912	101	29	53	28	3,6	7,1
	V2	4,3	405		3 196	2 282	3 006	91	16	47	23	4,7	9,5
	V1	3,3	315		2 558	1 809	2 336	87	10	42	18	6,1	12,2
44C/44C HEE	V5	7,9	755	40	4 537	3 637	4 490	141	73	61	36		
	V4	6,5	625		3 932	3 076	4 068	106	43	56	31		
	V3	5,6	535		3 484	2 685	3 720	101	29	53	28		
	V2	4,3	405		2 797	2 108	3 146	91	16	47	23		
	V1	3,3	315		2 258	1 673	2 643	87	10	42	18		
44D/44D HEE	V5	7,9	755	40	5 179	3 905	4 443	141	73	61	36		
	V4	6,5	625		4 430	3 286	4 017	106	43	56	31		
	V3	5,6	535		3 900	2 863	3 668	101	29	53	28		
	V2	4,3	405		3 097	2 243	3 097	91	16	47	23		
	V1	3,3	315		2 479	1 779	2 600	87	10	42	18		
												1200W	2400W
52C/52C HEE	V5	7,8	1 240	40	6 947	5 630	7 888	198	109	62	37	2,9	5,7
	V4	7,2	1 145		6 588	5 278	7 433	167	85	60	35	3,1	6,2
	V3	6,4	1 015		6 052	4 765	6 722	144	59	58	33	3,5	7,0
	V2	5,3	855		5 360	4 138	5 808	136	36	54	29	4,2	8,3
	V1	4,0	630		4 259	3 201	4 447	121	19	48	24	5,7	11,3
52D/52D HEE	V5	7,8	1 240	40	7 376	5 866	8 331	198	109	62	37	2,9	5,7
	V4	7,2	1 145		6 956	5 481	7 832	167	85	60	35	3,1	6,2
	V3	6,4	1 015		6 336	4 927	7 054	144	59	58	33	3,5	7,0
	V2	5,3	855		5 563	4 257	6 067	136	36	54	29	4,2	8,3
	V1	4,0	630		4 364	3 266	4 613	121	19	48	24	5,7	11,3
52E/52E HEE	V5	7,8	1 240	40	8 413	6 316	8 788	198	109	62	37	2,9	5,7
	V4	7,2	1 145		7 911	5 894	8 229	167	85	60	35	3,1	6,2
	V3	6,4	1 015		7 155	5 278	7 368	144	59	58	33	3,5	7,0
	V2	5,3	855		6 225	4 541	6 289	136	36	54	29	4,2	8,3
	V1	4,0	630		4 830	3 467	4 737	121	19	48	24	5,7	11,3
54C/54C HEE	V5	7,8	1 240	40	6 947	5 630	6 627	198	109	62	37		
	V4	7,2	1 145		6 588	5 278	6 411	167	85	60	35		
	V3	6,4	1 015		6 052	4 765	6 047	144	59	58	33		
	V2	5,3	855		5 360	4 138	5 541	136	36	54	29		
	V1	4,0	630		4 259	3 201	4 676	121	19	48	24		
54D/54D HEE	V5	7,8	1 240	40	7 599	5 966	6 572	198	109	62	37		
	V4	7,2	1 145		7 161	5 572	6 351	167	85	60	35		
	V3	6,4	1 015		6 510	5 003	5 981	144	59	58	33		
	V2	5,3	855		5 705	4 320	5 470	136	36	54	29		
	V1	4,0	630		4 454	3 309	4 605	121	19	48	24		
												1200W	2400W
62B/62B HEE	V5	7,3	2 410	40	11 075	9 544	13 078	533	356	73	46	1,5	3,0
	V4	6,3	2 180		10 479	8 964	12 346	454	315	71	44	1,6	3,3
	V3	5,8	2 000		9 880	8 383	11 528	409	250	69	42	1,8	3,6
	V2	4,8	1 660		9 243	7 759	10 629	366	143	66	39	2,1	4,3
	V1	4,2	1 415		8 463	7 008	9 594	315	94	64	36	2,5	5,0
62D/62D HEE	V5	7,3	2 410	40	13 526	10 896	14 803	533	356	73	46	1,5	3,0
	V4	6,3	2 180		12 764	10 184	13 881	454	315	71	44	1,6	3,3
	V3	5,8	2 000		11 941	9 444	12 873	409	250	69	42	1,8	3,6
	V2	4,8	1 660		11 042	8 644	11 771	366	143	66	39	2,1	4,3
	V1	4,2	1 415		9 979	7 719	10 520	315	94	64	36	2,5	5,0
62E/62E HEE	V5	7,3	2 410	40	15 578	11 927	16 152	533	356	73	46	1,5	3,0
	V4	6,3	2 180		14 577	11 072	15 057	454	315	71	44	1,6	3,3
	V3	5,8	2 000		13 561	10 214	13 877	409	250	69	42	1,8	3,6
	V2	4,8	1 660		12 421	9 281	12 610	366	143	66	39	2,1	4,3
	V1	4,2	1 415		11 110	8 221	11 186	315	94	64	36	2,5	5,0
64B/64B HEE	V5	7,3	2 410	40	11 075	9 544	16 682	533	356	73	46		
	V4	6,3	2 180		10 479	8 964	15 946	454	315	71	44		
	V3	5,8	2 000		9 880	8 383	15 112	409	250	69	42		
	V2	4,8	1 660		9 243	7 759	14 177	366	143	66	39		
	V1	4,2	1 415		8 463	7 008	13 066	315	94	64	36		
64D/64D HEE	V5	7,3	2 410	40	13 881	11 087	16 617	533	356	73	46		
	V4	6,3	2 180		13 082	10 351	15 865	454	315	71	44		
	V3	5,8	2 000		12 214	9 582	15 015	409	250	69	42		
	V2	4,8	1 660		11 298	8 768	14 067	366	143	66	39		
	V1	4,2	1 415		10 179	7 810	12 946	315	94	64	36		

(1) Static pressures given for information purposes. For higher available static pressures, consult our sales office
(2) Warning: the air supply temperature must not exceed 65°C (CIAT recommendation)
H model sound level:
Values given as a guideline for devices with non-ducted return and with ducted discharge, and for room and installation attenuation of 18 dB (sizes 0 to 3), 20 dB (sizes 4 & 5) and 23 dB (size 6)

U and U Compact MODELS (U Compact sizes 0 to 2 only)

Cooling temperature: water temperature: 7/12°C, air intake temperature: 27°C - 19°C (WB)
Heating temperature (2T): water temperature: 45/40°C, air intake temperature: 20°C
Heating temperature (4T): water temperature: 65/55°C, air intake temperature: 20°C

COMFORT LINE U model	AC motor speeds	HEE motor voltage (V)	Air flow in m³/h	Available static pressure (1)	Cooling cap. W		Heating capacity W	Power input		Overall sound power LW dB(A)	Comfort level ISO or NR	Average air temperature rise in K (2) Auxiliary electric heater 230/1/50	
					Total	Sensible		AC Motor W	HEE motor W				
												500W	1000W
02B/02B HEE	V5	9,8	260	50	1 660	1 320	1 810	57	44	61	37	5,7	11,3
	V4	8	230		1 480	1 160	1 620	39	26	55	32	6,4	12,8
	V3	6,7	195		1 300	1 000	1 410	29	17	51	27	7,5	15,1
	V2	4,8	140		983	738	1 050	19	9	43	19	10,5	21,0
	V1	3,3	100		790	558	768	13	5	34	<15	14,7	29,4
04B/04D HEE	V5	9,8	260	50	1 550	1 280	2 050	57	29	61	35		
	V4	8	230		1 370	1 120	1 870	39	23	55	31		
	V3	6,7	195		1 150	938	1 670	29	18	51	27		
	V2	4,8	140		856	687	1 300	19	12	43	19		
	V1	3,3	100		729	533	1 080	13	8	34	<15		
												500W	1000W
12B/12B HEE	V5	9,3	170	50	832	761	1 140	63	29	53	31	8,7	17,3
	V4	8,5	155		774	696	1 080	39	23	50	28	9,5	19,0
	V3	7,6	140		727	638	984	34	18	47	25	10,5	21,0
	V2	6,4	120		665	563	852	30	12	43	20	12,3	24,5
	V1	5,1	95		582	470	674	30	8	37	<15	15,5	31,0
12D/12D HEE	V5	9,3	170	50	1 050	854	1 200	63	29	53	31	8,7	17,3
	V4	8,5	155		948	767	1 140	39	23	50	28	9,5	19,0
	V3	7,6	140		852	688	1 030	34	18	47	25	10,5	21,0
	V2	6,4	120		762	602	887	30	12	43	20	12,3	24,5
	V1	5,1	95		653	499	699	30	8	37	<15	15,5	31,0
12E/12E HEE	V5	9,3	170	50	1 240	930	1 230	63	29	53	31	8,7	17,3
	V4	8,5	155		1 120	840	1 160	39	23	50	28	9,5	19,0
	V3	7,6	140		1 010	753	1 050	34	18	47	25	10,5	21,0
	V2	6,4	120		867	646	899	30	12	43	20	12,3	24,5
	V1	5,1	95		721	528	706	30	8	37	<15	15,5	31,0
14B/14B HEE	V5	9,3	170	50	832	762	1 460	63	29	53	31		
	V4	8,5	155		774	697	1 400	39	23	50	28		
	V3	7,6	140		727	639	1 300	34	18	47	25		
	V2	6,4	120		665	565	1 150	30	12	43	20		
	V1	5,1	95		582	472	958	30	8	37	<15		
14D/14D HEE	V5	9,3	170	50	1 060	859	1 790	63	29	53	31		
	V4	8,5	155		955	722	1 700	39	23	50	28		
	V3	7,6	140		857	692	1 550	34	18	47	25		
	V2	6,4	120		765	605	1 360	30	12	43	20		
	V1	5,1	95		653	501	1 090	30	8	37	<15		
												500W	1000W
22C/22C HEE	V5	8,9	470	50	2 470	2 170	3 070	107	66	54	30	3,1	6,3
	V4	8,5	445		2 350	2 050	2 950	85	55	53	28	3,3	6,6
	V3	7,7	405		2 180	1 880	2 730	74	42	51	25	3,6	7,3
	V2	5,6	295		1 690	1 400	2 070	59	11	43	18	5,0	10,0
	V1	3,2	175		1 060	852	1 260	48	6	31	<15	8,4	16,8
22D/22D HEE	V5	8,9	470	50	2 800	2 300	3 200	107	66	54	30	3,1	6,3
	V4	8,5	445		2 670	2 180	3 070	85	55	53	28	3,3	6,6
	V3	7,7	405		2 470	2 000	2 830	74	42	51	25	3,6	7,3
	V2	5,6	295		1 890	1 500	2 100	59	11	43	18	5,0	10,0
	V1	3,2	175		1 170	910	1 250	48	6	31	<15	8,4	16,8
22E/22E HEE	V5	8,9	470	50	3 040	2 400	3 310	107	66	54	30	3,1	6,3
	V4	8,5	445		2 890	2 270	3 170	85	55	53	28	3,3	6,6
	V3	7,7	405		2 680	2 080	2 920	74	42	51	25	3,6	7,3
	V2	5,6	295		2 060	1 560	2 180	59	11	43	18	5,0	10,0
	V1	3,2	175		1 290	953	1 310	48	6	31	<15	8,4	16,8
24C/24C HEE	V5	8,9	470	50	2 470	2 180	2 600	107	66	54	30		
	V4	8,5	445		2 350	2 060	2 540	85	55	53	28		
	V3	7,7	405		2 180	1 890	2 430	74	42	51	25		
	V2	5,6	295		1 690	1 410	2 050	59	11	43	18		
	V1	3,2	175		1 060	854	1 460	48	6	31	<15		
24D/24D HEE	V5	8,9	470	50	2 860	2 330	3 500	107	66	54	30		
	V4	8,5	445		2 720	2 200	3 410	85	55	53	28		
	V3	7,7	405		2 510	2 020	3 240	74	42	51	25		
	V2	5,6	295		1 910	1 510	2 690	59	11	43	18		
	V1	3,2	175		1 190	919	1 860	48	6	31	<15		

(1) Static pressures given for information purposes. For higher available static pressures, consult our sales office
(2) Warning: the air supply temperature must not exceed 65°C (CIAT recommendation)
U model sound level:
Values given as a guideline for devices with ducted return and discharge, and for room and installation attenuation of 19 dB (sizes 0 to 3), 21 dB (sizes 4)

378

U MODEL

COMFORT LINE U model	AC motor speeds	HEE motor voltage (V)	Air flow in m³/h	Available static pressure (1)	Cooling cap. W		Heating capacity W	Power input		Overall sound power LW dB(A)	Comfort level ISO or NR	Average air temperature rise in K (2) Auxiliary electric heater 230/1/50	
					Total	Sensible		AC Motor W	HEE motor W				
												700W	1400W
32C/32C HEE	V5	9,3	660	50	3 720	3 110	4 380	149	96	57	34	3,1	6,2
	V4	8	575		3 350	2 740	3 890	94	63	54	30	3,6	7,2
	V3	7	500		3 020	2 440	3 410	90	43	50	26	4,1	8,2
	V2	5,5	390		2 500	1 970	2 680	85	23	44	19	5,3	10,6
	V1	4,4	305		2 080	1 610	2 120	85	14	39	<15	6,8	13,5
32D/32D HEE	V5	9,3	660	50	4 000	3 250	4 660	149	96	57	34	3,1	6,2
	V4	8	575		3 560	2 840	4 120	94	63	54	30	3,6	7,2
	V3	7	500		3 200	2 520	3 600	90	43	50	26	4,1	8,2
	V2	5,5	390		2 610	2 020	2 820	85	23	44	19	5,3	10,6
	V1	4,4	305		2 140	1 640	2 220	85	14	39	<15	6,8	13,5
32E/32E HEE	V5	9,3	660	50	4 130	3 290	4 640	149	96	57	34	3,1	6,2
	V4	8	575		3 670	2 880	4 090	94	63	54	30	3,6	7,2
	V3	7	500		3 290	2 550	3 570	90	43	50	26	4,1	8,2
	V2	5,5	390		2 680	2 050	2 780	85	23	44	19	5,3	10,6
	V1	4,4	305		2 200	1 660	2 190	85	14	39	<15	6,8	13,5
34C/34C HEE	V5	9,3	660	50	3 720	3 120	3 890	149	96	57	34		
	V4	8	575		3 350	2 750	3 630	94	63	54	30		
	V3	7	500		3 020	2 450	3 350	90	43	50	26		
	V2	5,5	390		2 500	1 980	2 880	85	23	44	19		
	V1	4,4	305		2 080	1 620	2 460	85	14	39	<15		
34D/34D HEE	V5	9,3	660	50	4 070	3 290	5 130	149	96	57	34		
	V4	8	575		3 610	2 870	4 750	94	63	54	30		
	V3	7	500		3 230	2 540	4 350	90	43	50	26		
	V2	5,5	390		2 650	2 040	3 690	85	23	44	19		
	V1	4,4	305		2 170	1 650	3 110	85	14	39	<15		
												700W	1400W
42C/42C HEE	V5	8,4	775	50	4 900	3 870	5 200	166	87	55	29	2,7	5,3
	V4	7,3	630		4 140	3 200	4 370	103	54	52	25	3,3	6,5
	V3	6,2	535		3 620	2 770	3 760	99	35	48	21	3,8	7,7
	V2	4,7	405		2 850	2 160	2 910	89	18	42	16	5,1	10,2
	V1	3,7	315		2 270	1 700	2 260	84	11	38	<15	6,5	13,1
42D/42D HEE	V5	8,4	775	50	5 200	4 030	5 470	166	87	55	29	2,7	5,3
	V4	7,3	630		4 390	3 330	4 570	103	54	52	25	3,3	6,5
	V3	6,2	535		3 840	2 880	3 910	99	35	48	21	3,8	7,7
	V2	4,7	405		3 040	2 240	3 000	89	18	42	16	5,1	10,2
	V1	3,7	315		2 430	1 770	2 320	84	11	38	<15	6,5	13,1
42E/42E HEE	V5	8,4	775	50	5 460	4 140	5 550	166	87	55	29	2,7	5,3
	V4	7,3	630		4 590	3 410	4 610	103	54	52	25	3,3	6,5
	V3	6,2	535		4 000	2 950	3 940	99	35	48	21	3,8	7,7
	V2	4,7	405		3 160	2 290	3 020	89	18	42	16	5,1	10,2
	V1	3,7	315		2 520	1 810	2 330	84	11	38	<15	6,5	13,1
44C/44C HEE	V5	8,4	775	50	4 570	3 770	4 550	166	87	55	29		
	V4	7,3	630		3 900	3 130	4 110	103	54	52	25		
	V3	6,2	535		3 450	2 720	3 740	99	35	48	21		
	V2	4,7	405		2 760	2 130	3 160	89	18	42	16		
	V1	3,7	315		2 220	1 680	2 640	84	11	38	<15		
44D/44D HEE	V5	8,4	775	50	5 270	4 070	4 500	166	87	55	29		
	V4	7,3	630		4 430	3 360	4 060	103	54	52	25		
	V3	6,2	535		3 870	2 900	3 690	99	35	48	21		
	V2	4,7	405		3 070	2 260	3 110	89	18	42	16		
	V1	3,7	315		2 450	1 790	2 600	84	11	38	<15		

(1) Static pressures given for information purposes. For higher available static pressures, consult our sales office
(2) Warning: the air supply temperature must not exceed 65°C (CIAT recommendation)

U model sound level:
Values given as a guideline for devices with ducted return and discharge, and for room and installation attenuation of 19 dB (sizes 1 to 3), 21 dB (sizes 4)

LIk/LYk MODELS

Cooling temperature: water temperature: 7/12°C, air intake temperature: 27°C - 19°C (WB)
Heating temperature (2T): water temperature: 45/40°C, air intake temperature: 20°C
Heating temperature (4T): water temperature: 65/55°C, air intake temperature: 20°C

Size	AC motor code	HEE motor voltage (V)	Air flow in m³/h	Available static pressure (1)	Cooling cap. W Total	Cooling cap. W Sensible	Heating capacity W	AC motor power input W	HEE motor power input W	Sound power LW dB(A)	ISO or NR comfort level for LI	ISO or NR comfort level for LY	Average air temperature rise in K (2) Auxiliary electric heater 230/1/50	
													500W	1000W
12B/12B HEE	V5	8	520	10	1 894	1 809	2 675	73	36	59	43	41	2,8	5,7
	V4	6,6	420		1 653	1 550	2 326	48	22	53	37	35	3,5	7,0
	V3	5,6	340		1 438	1 328	2 011	41	14	48	32	30	4,3	8,7
	V2	4,3	250		1 134	1 028	1 617	35	9	42	24	22	5,9	11,8
	V1	3,2	175		835	755	1 218	34	5	35	18	16	8,4	16,8
12D/12D HEE	V5	8	520	10	2 465	2 142	3 056	73	36	59	43	41	2,8	5,7
	V4	6,6	420		2 126	1 804	2 614	48	22	53	37	35	3,5	7,0
	V3	5,6	340		1 843	1 533	2 229	41	14	48	32	30	4,3	8,7
	V2	4,3	250		1 449	1 174	1 752	35	9	42	24	22	5,9	11,8
	V1	3,2	175		1 075	856	1 288	34	5	35	18	16	8,4	16,8
12E/12E HEE	V5	8	520	10	3 008	2 409	3 362	73	36	59	43	41	2,8	5,7
	V4	6,6	420		2 572	2 012	2 834	48	22	53	37	35	3,5	7,0
	V3	5,6	340		2 211	1 697	2 386	41	14	48	32	30	4,3	8,7
	V2	4,3	250		1 718	1 289	1 833	35	9	42	24	22	5,9	11,8
	V1	3,2	175		1 272	937	1 322	34	5	35	18	16	8,4	16,8
14B/14B HEE	V5	8	520	10	1 894	1 809	2 784	73	36	59	43	41	2,8	5,7
	V4	6,6	420		1 653	1 550	2 522	48	22	53	37	35	3,5	7,0
	V3	5,6	340		1 438	1 328	2 276	41	14	48	32	30	4,3	8,7
	V2	4,3	250		1 134	1 028	1 910	35	9	42	24	22	5,9	11,8
	V1	3,2	175		835	755	1 531	34	5	35	18	16	8,4	16,8
14D/14D HEE	V5	8	520	10	2 465	2 142	4 095	73	36	59	43	41	2,8	5,7
	V4	6,6	420		2 126	1 804	3 588	48	22	53	37	35	3,5	7,0
	V3	5,6	340		1 843	1 533	3 132	41	14	48	32	30	4,3	8,7
	V2	4,3	250		1 449	1 174	2 498	35	9	42	24	22	5,9	11,8
	V1	3,2	175		1 075	856	1 894	34	5	35	18	16	8,4	16,8
													500W	1000W
22C/22C HEE	V5	7,8	775	10	3 535	3 267	4 597	117	72	62	47	45	1,9	3,8
	V4	7,1	705		3 319	3 019	4 287	102	54	60	44	42	2,1	4,2
	V3	6,3	610		2 994	2 673	3 845	87	37	56	40	38	2,4	4,8
	V2	4,3	410		2 225	1 883	2 773	66	15	47	30	28	3,6	7,2
	V1	2,5	235		1 415	1 137	1 703	51	6	34	18	16	6,3	12,5
22D/22D HEE	V5	7,8	775	10	4 221	3 560	4 972	117	72	62	47	45	1,9	3,8
	V4	7,1	705		3 930	3 272	4 606	102	54	60	44	42	2,1	4,2
	V3	6,3	610		3 523	2 883	4 088	87	37	56	40	38	2,4	4,8
	V2	4,3	410		2 555	2 015	2 869	66	15	47	30	28	3,6	7,2
	V1	2,5	235		1 594	1 218	1 709	51	6	34	18	16	6,3	12,5
22E/22E HEE	V5	7,8	775	10	4 459	3 654	5 139	117	72	62	47	45	1,9	3,8
	V4	7,1	705		4 170	3 367	4 758	102	54	60	44	42	2,1	4,2
	V3	6,3	610		3 747	2 972	4 222	87	37	56	40	38	2,4	4,8
	V2	4,3	410		2 736	2 089	2 965	66	15	47	30	28	3,6	7,2
	V1	2,5	235		1 717	1 267	1 774	51	6	34	18	16	6,3	12,5
24C/24C HEE	V5	7,8	775	10	3 535	3 267	3 227	117	72	62	47	45	1,9	3,8
	V4	7,1	705		3 319	3 019	3 114	102	54	60	44	42	2,1	4,2
	V3	6,3	610		2 994	2 673	2 942	87	37	56	40	38	2,4	4,8
	V2	4,3	410		2 225	1 883	2 452	66	15	47	30	28	3,6	7,2
	V1	2,5	235		1 415	1 137	1 802	51	6	34	18	16	6,3	12,5
24D/24D HEE	V5	7,8	775	10	4 221	3 560	4 460	117	72	62	47	45	1,9	3,8
	V4	7,1	705		3 930	3 272	4 282	102	54	60	44	42	2,1	4,2
	V3	6,3	610		3 523	2 883	4 015	87	37	56	40	38	2,4	4,8
	V2	4,3	410		2 555	2 015	3 274	66	15	47	30	28	3,6	7,2
	V1	2,5	235		1 594	1 218	2 335	51	6	34	18	16	6,3	12,5

(1) Static pressures given for information purposes. For higher available static pressures, consult our sales office.
Model LI sound level:
Values are given as a guideline for units with room and installation attenuation of 12 dB (Sizes 1 to 3) and 14 dB (Size 4).
Model LY sound level:
Values are given as a guideline for units with room and installation attenuation of 14 dB (Sizes 1 to 3) and 16 dB (Size 4).
(2) Important: the air supply temperature should not exceed 65°C (CIAT recommendation).

LIk / LYk MODELS

Size	AC motor code	HEE motor voltage (V)	Air flow in m³/h	Available static pressure (1)	Cooling cap. W Total	Cooling cap. W Sensible	Heating capacity W	AC motor power input W	HEE motor power input W	Sound power LW dB(A)	ISO or NR comfort level for LI	ISO or NR comfort level for LY	Average air temperature rise in K (2) Auxiliary electric heater 230/1/50	
													700W	1400W
32C/32C HEE	V5	7,8	1265	10	5 549	4 953	7 868	162	113	65	48	46	1,6	3,3
	V4	6	945		4 674	4 005	6 114	121	49	58	42	40	2,2	4,4
	V3	5	755		4 085	3 398	5 006	110	28	54	38	36	2,7	5,5
	V2	3,8	550		3 293	2642	3 749	96	15	49	33	31	3,7	7,5
	V1	3,1	425		2712	2123	2 914	92	9	44	28	26	4,8	9,7
32D/32D HEE	V5	7,8	1265	10	6 237	5 371	8 507	162	113	65	48	46	1,6	3,3
	V4	6	945		5 162	4 277	6 555	121	49	58	42	40	2,2	4,4
	V3	5	755		4 422	3 570	5 336	110	28	54	38	36	2,7	5,5
	V2	3,8	550		3 512	2 744	3 968	96	15	49	33	31	3,7	7,5
	V1	3,1	425		2854	2183	3 071	92	9	44	28	26	4,8	9,7
32E/32E HEE	V5	7,8	1265	10	6 503	5 448	8 576	162	113	65	48	46	1,6	3,3
	V4	6	945		5 366	4 338	6 569	121	49	58	42	40	2,2	4,4
	V3	5	755		4 576	3 618	5 326	110	28	54	38	36	2,7	5,5
	V2	3,8	550		3 613	2 778	3 940	96	15	49	33	31	3,7	7,5
	V1	3,1	425		2 934	2215	3 037	92	9	44	28	26	4,8	9,7
34C/34C HEE	V5	7,8	1265	10	5 549	4 953	5 295	162	113	65	48	46	1,6	3,3
	V4	6	945		4 674	4 005	4 668	121	49	58	42	40	2,2	4,4
	V3	5	755		4 085	3 398	4 194	110	28	54	38	36	2,7	5,5
	V2	3,8	550		3 293	2642	3 555	96	15	49	33	31	3,7	7,5
	V1	3,1	425		2712	2123	3 038	92	9	44	28	26	4,8	9,7
34D/34D HEE	V5	7,8	1265	10	6 237	5 371	7 222	162	113	65	48	46	1,6	3,3
	V4	6	945		5 162	4 277	6 268	121	49	58	42	40	2,2	4,4
	V3	5	755		4 422	3 570	5 566	110	28	54	38	36	2,7	5,5
	V2	3,8	550		3 512	2 744	4 638	96	15	49	33	31	3,7	7,5
	V1	3,1	425		2854	2183	3 913	92	9	44	28	26	4,8	9,7
													700W	1400W
42C/42C HEE	V5	7,3	1300	10	6 462	5 682	8 136	176	101	64	45	43	1,6	3,2
	V4	5,4	930		7 006	6 342	9 082	123	40	57	39	37	2,2	4,4
	V3	4,4	745		4 469	3 570	5 052	110	24	53	35	33	2,8	5,5
	V2	3,4	555		3 584	2771	3 877	95	13	48	30	28	3,7	7,4
	V1	2,7	415		2863	2163	2 982	90	8	44	26	24	5,0	9,9
42D/42D HEE	V5	7,3	1300	10	7 552	6 142	8 731	176	101	64	45	43	1,6	3,2
	V4	5,4	930		5 973	4 624	6 513	123	40	57	39	37	2,2	4,4
	V3	4,4	745		5 041	3 811	5 307	110	24	53	35	33	2,8	5,5
	V2	3,4	555		3 980	2 940	4 035	95	13	48	30	28	3,7	7,4
	V1	2,7	415		3151	2290	3 080	90	8	44	26	24	5,0	9,9
42E/42E HEE	V5	7,3	1300	10	8 071	6 341	8 957	176	101	64	45	43	1,6	3,2
	V4	5,4	930		6 304	4 757	6 630	123	40	57	39	37	2,2	4,4
	V3	4,4	745		5 295	3 915	5 379	110	24	53	35	33	2,8	5,5
	V2	3,4	555		4 158	3 014	4 071	95	13	48	30	28	3,7	7,4
	V1	2,7	415		3 277	2342	3 098	90	8	44	26	24	5,0	9,9
44C/44C HEE	V5	7,3	1300	10	6 462	5 682	5 814	176	101	64	45	43	1,6	3,2
	V4	5,4	930		5 237	4 315	5 007	123	40	57	39	37	2,2	4,4
	V3	4,4	745		4 469	3 570	4 477	110	24	53	35	33	2,8	5,5
	V2	3,4	555		3 584	2771	3 811	95	13	48	30	28	3,7	7,4
	V1	2,7	415		2863	2163	3 210	90	8	44	26	24	5,0	9,9
44D/44D HEE	V5	7,3	1300	10	7 668	6 188	5 796	176	101	64	45	43	1,6	3,2
	V4	5,4	930		6 055	4 656	4 967	123	40	57	39	37	2,2	4,4
	V3	4,4	745		5 099	3 835	4 429	110	24	53	35	33	2,8	5,5
	V2	3,4	555		4 018	2 956	3 759	95	13	48	30	28	3,7	7,4
	V1	2,7	415		3176	2302	3 160	90	8	44	26	24	5,0	9,9

(1) Static pressures given for information purposes. For higher available static pressures, consult our sales office.
Model LI sound level:
Values are given as a guideline for units with room and installation attenuation of 12 dB (Sizes 1 to 3) and 14 dB (Size 4).
Model LY sound level:
Values are given as a guideline for units with room and installation attenuation of 14 dB (Sizes 1 to 3) and 16 dB (Size 4).
(2) Important: the air supply temperature should not exceed 65°C (CIAT recommendation).

COMFORT UNIT CONTROLS

Electromechanical controls		
	Air type	On/off room thermostat range
	Water type	On/off room thermostat range

Electronic controls		
	Air type	**V30** range on/off
	Water type	**V30** range on/off
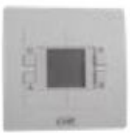		**V300** range master/slave PI
		V3000 range KNX communicating PID

Fresh air management		
		R1 pack with occupancy sensor for use in offices
		R+ pack with CO_2 sensor for use in meeting rooms

Centralised management for CIATControl V3000® system		
	Control of CIAT system solutions	**Smart CIATControl:** Centralised management system

4

383

SELECTION TABLE FOR DEDICATED COMFORT UNIT CONTROLS

Your CIAT comfort units will be controlled as follows

	INDIVIDUALLY		MASTER/SLAVE	COMMUNICATING for CMS	
	ELECTROMECHANICAL	ELECTRONIC		On a third party CMS (3) or CIATControl communicating system: Easy, Smart	
Communication protocol				KNX (2)	LON (2)
CIAT control range	RTR-R	V30	V300	V3000	V-LON 2
Control type:	On/off	On/off	PI	PID	PI

APPLICATIONS					
Air control					
2 heating tubes only	RTR-E 7015	X	Option		
2 cooling tubes only	RTR-E 7015	X	Option		
2 heating/cooling tubes, manual reversal via selector	RTR-E 7015				
2 heating/cooling tubes, automatic reversal via local changeover sensor	RTR-E 7009	X	Option		
2 cooling tubes only + electric heater with deadband (1)		X	Option		
2 heating/cooling tubes + electric heater - automatic selection (1)		X	Option		
Water control with 2-way valve (V2V) or 3-way valve + by-pass (V4V)					
2 heating tubes only with V2V or V4V	RTR-E 7011	X	X	X	X
2 cooling tubes only with V2V or V4V	RTR-E 7011	X	X	X	X
2 heating/cooling tubes, manual reversal via selector with V2V or V4V	RTR-E 7012				
2 heating/cooling tubes, automatic reversal via local sensor with V4V	RTR-E 7203	X	X	X	.(4)
2 cooling tubes only + electric heater with deadband (1) with V2V or V4V	RTR-E 7203	X	X	X	X
2 cooling tubes only + electric heater + manual selection via selector (1) with V2V or V4V	RTR-E 7012				
2 heating/cooling tubes + electric heater - automatic selection via local sensor (1) with V4V		X	X	X	.(4)
4 tubes with 2 x V2V or 2 x V4V	RTR-E 7203	X	X	X	X
Functions					
Management of window switch with frost protection		X	X	X	X
Standby mode with frost protection		X	X	X	X
Input for external timer			X	X	
Reconfiguration of controller on-site without specific tools		X	X	X	
Zone timer (additional module)			X	X	
Changeover (possible option)					
Centralised changeover with control line	According to model	X	X		
Changeover managed by the bus from the CMS			Option	X	Compulsory (4)
Control unit					
Wall-mounted	X	X	X	X	X
Flush-mounted in the vertical cased or uncased MAJOR LINE comfort unit		X	X	X	
Digital display			X	X	Option
Potentiometer	X	X		Option	X
Radiofrequency remote control			X	X	
Blank wall-mounted terminal				X	
On/off button	According to model	X	X	X	X
Summer/winter toggle switch	According to model				
+/- adjustment of setpoint	X	X	X	X	X
Ventilation	Manual I II III	Manual I II III	Manual I II III + auto	Manual I II III + auto	Manual I II III + auto
Deadband ventilation (for water control above)	Permanent	Stopped or permanent	Stopped or permanent	Stopped or permanent	Stopped or permanent
HEE motor energy optimisation by 0/10V signal			X	X	X
Valves					
Thermal, on/off	X	X			
Thermal, chrono-proportional			X		X
Modulating, 3-position				X	
Automatic balancing 2-way valves	X	X	X	X	X
CIAT supervision (see corresponding offer in our catalogue)					
Smart CIATControl				X	
Eu.bac certification	No	No	Yes	Yes	Yes

(1) Depending on the capacity of the selected electric heater, an additional relay may be required.
(2) Refer to the technical details for the selected communication technology.
(3) Centralised Management System.
(4) Not supplied by CIAT: Changeover managed by the CMS via bus
- After having selected a type of control, ensure it is compatible with the selected comfort unit. Some controls offer a panel of extra options: Refer to the relevant instruction manuals.

384

THEORETICAL WATER FLOW RATE/PRESSURE DROPS, BASED ON THE KVS OF THE VALVES

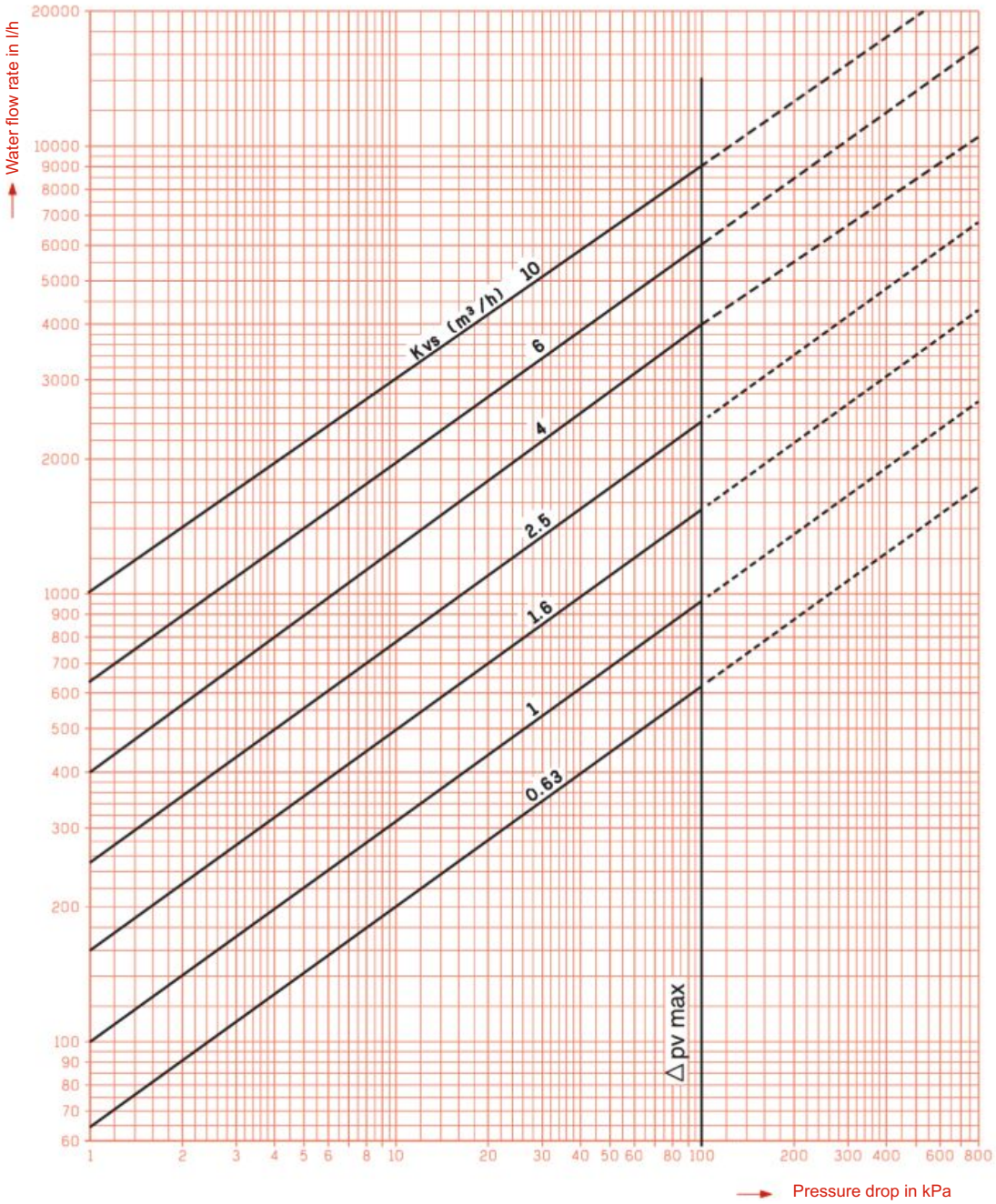

The limits of use vary depending on the suppliers and the type of valve used.
Refer to the commercial offer.

Δpv max.: Maximum permissible differential pressure on the valve at all speeds.

To prevent any risk of noise and erosion of the seat and valve, an operating Δp < Δpv max. must be observed.
To guarantee correct operation of the valves and ensure their service life, we recommend:
- Ensuring the hydraulic networks are correctly balanced (use adjustment tees),
- The use of discharge valves or variable flow pumps for networks equipped with terminal units regulated by 2-way valve(s),
- Ensuring the hydraulic system is free of sludge or any other particles liable to adversely affect the operation of the valves.
- An operating Δp in line with manufacturers' instructions is available on request to prevent flow noise.

Coding for unit for recirculated air applications only

Room thermostat

MAJOR LINE COADIS LINE COMFORT LINE MELODY2		
2-tube system		
Cooling only or heating only		
■ **3-speed ventilation** RTR-E 7015 room thermostat with manual summer/winter toggle switch Note: For operation without manual reverse switch, please contact us	Code	5201023
Heating/cooling with manual summer/winter toggle switch		
■ **3 ventilation speeds** RTR-E 7015 room thermostat with manual summer/winter toggle switch	Code	5201023
Heating/cooling with automatic changeover		
■ **3 ventilation speeds** RTR-E 7009 room thermostat with automatic changeover thermostat	Code	7124612 + 7128892

* For ceiling units with the following scenarios:
- High local humidity,
- Very low temperature chilled water,
- Fresh air supply,
- Use of high speeds,
- Intermittent operation.

We recommend the use of controls acting on valves (see next page).

386

CODING FOR UNIT FOR RECIRCULATED AIR APPLICATIONS ONLY

COADIS LINE 600, MAJOR LINE, MELODY 2				VALVE KIT		
230/1/50 valve kit - Fittings not included Max. Δ Pv of 70 to 300 kPa based on the KVS**				**Thermostats**		
2-tube and 2-tube cooling + electric systems				**2-tube system**		
■ **1 electrothermic two-way valve PN 16 - DN15 - KVS 1.6 max.**	COADIS LINE 612, 622, 632	Code	7301640	**Cooling only or heating only**		
■ **1 electrothermic four-way valve* PN 16 - DN15 - KVS 1.6 max.**		Code	7301641	■ **3 ventilation speeds** RTR-E 7011 room thermostat	Code	5201018
■ **1 electrothermic two-way valve PN 16 - DN15- KVS 1.6 max.**	MAJOR LINE 102-, 202-, 302-, 402-,	Code	7245718	**HOT/COLD operation**		
				■ **3 ventilation speeds - Manual summer/winter toggle switch** RTR-E 7012 room thermostat	Code	5201024
■ **1 electrothermic four-way valve* PN 16 - DN15- KVS 1.6 max.**		Code	7245719	■ **3 ventilation speeds - Automatic summer/ winter changeover switch** RTR-E 7203 room thermostat + automatic changeover (on four-way valve only)	Code	5201021 + 7128892
■ **1 electrothermic two-way valve PN 16 - DN20- KVS 2.5 max.**	MAJOR LINE 502- & 602-	Code	7245720			
■ **1 electrothermic four-way valve* PN 16 - DN20- KVS 2.5 max.**		Code	7245721	**2-tube cooling with electric heater (1)**		
				Manual summer/winter toggle switch		
■ **1 electrothermic two-way valve PN16 - DN20 - KVS 2.5 max.**	MELODY 2 61, 62, 63	Code	7469216	■ **3 ventilation speeds** RTR-E 7012 room thermostat Manual summer/winter toggle switch (Pélec≤1400 W) (2)	Code	5201024
■ **1 electrothermic four-way valve PN16 - DN20 - KVS 2.5 max.**		Code	7469217	**Deadband thermostats**		
■ **1 electrothermic two-way valve PN16 - DN25 - KVS 4.5 max.**	MELODY 2 92, 93, 94	Code	7469214	■ **3 ventilation speeds** RTR-E 7203 room thermostat with deadband (Pélec≤1400 W) (2)	Code	5201021
■ **1 electrothermic four-way valve PN16 - DN25 - KVS 4.5 max.**		Code	7469215	■ **Optional two-contact 230 V relay(4)** 16 A - factory-fitted (3)	Code	E038806
4-tube system						
■ **2 electrothermic two-way valves PN 16 - DN 15 - KVS 1.6 max.**	COADIS LINE 624, 634	Code	E046500	■ **3 ventilation speeds** RTR-E 7203 room thermostat with deadband	Code	5201021
■ **2 electrothermic* four-way valves* PN 16 - DN 15 - KVS 1.6 max.**		Code	E046501			
■ **2 electrothermic two-way valves PN 16 - DN 15 - KVS 1.6 max.**	MAJOR LINE 104-, 204-, 304-, 404-	Code	7245722			
■ **2 electrothermic* four-way valves* PN 16 - DN 15 - KVS 1.6 max.**		Code	7245723			
■ **2 electrothermic two-way valves PN 16 heating DN 15 - cooling DN 20-KVS 2.5 max.**	MAJOR LINE 504- & 604 -	Code	7245724			
■ **2 electrothermic four-way valves* PN 16 heating DN 15 - cooling DN 20-KVS 2.5 max.**		Code	7245725			
■ **1 electrothermic two-way valve PN16 - DN20 - KVS 2.5 max.**	MELODY2 61, 62, 63	Code	7469216			
■ **1 electrothermic two-way valve PN16 - heating DN15 - KVS 1.6 max.**		Code	7301640			
■ **1 electrothermic four-way valve PN16 - DN20 - KVS 2.5 max.**	MELODY2 61, 62, 63	Code	7469217			
■ **1 electrothermic four-way valve PN16 - heating DN15 - KVS 1.6 max.**		Code	7301641			
■ **1 electrothermic two-way valve PN16 - DN25 - KVS 4.5 max.**	MELODY2 92, 93, 94	Code	7469214			
■ **1 electrothermic two-way valve PN16 - heating DN20 - KVS 2.5 max.**		Code	7469216			
■ **1 electrothermic four-way valve PN16 - DN25 - KVS 4.5 max.**	MELODY2 92, 93, 94	Code	7469215			
■ **1 electrothermic four-way valve PN16 - heating DN20 - KVS 2.5 max.**		Code	7469217			

* three-way valve(s) with bypass.

* * Refer to instruction manuals for information on the maximum allowable differential pressures and the maximum operating pressures based on the KVS of the valve used.

(1) MAJOR LINE: 2-pipe setup + electric battery with one resistor only.

(2) For higher capacities, an optional relay or a relay supplied by the customer is required.

(3) Not including Coadis Line and Mélody 2:
CDL600: P max. 1200 W
CDL900 and Mélody 2: Relay included in the basic unit

387

CODING FOR UNIT FOR RECIRCULATED AIR APPLICATIONS ONLY

COADIS LINE 600 & 900 - COMFORT LINE MAJOR LINE | **VALVES FITTED AND WIRED**

230/1/50 valve - Fittings not mounted or wired Max. Δ Pv up to 300 kPa based on the KVS**				Thermostats		
2-tube and 2-tube cooling + electric systems				**2-tube system**		
■ **1 electrothermic two-way valve PN 16 - DN15- KVS 1.6 max.**	COADIS LINE 612, 622, 632 MAJOR LINE 102-, 202-, 302-, 402-, COMFORT LINE 02-,12-,22-,32-	Code	E037605	**Heating only or cooling only**		
■ **1 electrothermic four-way valve* PN 16 - DN15- KVS 1.6 max.**		Code	E037567	■ **3 ventilation speeds** RTR-E 7011 room thermostat	Code	5201018
				HOT/COLD operation		
				■ **3 ventilation speeds - Manual summer/ winter toggle switch** RTR-E 7012 room thermostat	Code	5201024
				■ **3 ventilation speeds - Automatic summer/ winter changeover** RTR-E 7203 room thermostat + automatic changeover (on four-way valve only)	Code	5201021 + 7128892
				2-tube cooling with electric heater (1)		
				Manual summer/winter toggle switch		
■ **1 electrothermic two-way valve PN 16 - DN20- KVS 2.5 max.**	COADIS LINE 922 MAJOR LINE 502- & 602- COMFORT LINE 42- & 52-	Code	E037613	■ **3 ventilation speeds** RTR-E 7012 room thermostat Manual summer/winter toggle switch (Pélec≤1400 W) (2)	Code	5201024
■ **1 electrothermic four-way valve* PN 16 - DN20- KVS 2.5 max.**		Code	E037575	**Deadband thermostats**		
■ **1 electrothermic two-way valve PN16 - DN20 - KVS 4 max.**	COADIS LINE 932 & 932SP COMFORT LINE 62-	Code	E037613	■ **3 ventilation speeds** RTR-E 7203 room thermostat with deadband (Pélec≤1400 W) (2)	Code	5201021
■ **1 electrothermic four-way valve PN16 - DN20 - KVS 4 max.**		Code	E037575	■ **Optional two-contact 230 V relay(4)** 16 A - factory-fitted (3)	Code	E038806
4-tube system						
■ **2 electrothermic two-way valves PN 16 - DN 15 - KVS 1.6 max.**	COADIS LINE 624 & 634 MAJOR LINE 104-, 204-, 304-, 404-, COMFORT LINE 04-,14-,24-,324	Code	E037621	■ **3 ventilation speeds** RTR-E 7203 room thermostat with deadband	Code	5201021
■ **2 electrothermic* four-way valves* PN 16 - DN 15 - KVS 1.6 max.**		Code	E037583			
■ **2 electrothermic two-way valves PN 16 heating DN 15 - KVS 1.6 max. - cooling DN 20-KVS 2.5 max.**	COADIS LINE 924 MAJOR LINE 504- & 604- COMFORT LINE 44- & 54-	Code	E037648			
■ **2 electrothermic four-way valves* PN 16 heating DN 15 - KVS 1.6 max. - cooling DN 20-KVS 2.5 max.**		Code	E037591			
■ **2 electrothermic two-way valves PN 16 heating DN 15 - KVS 1.6 max. - cooling DN 20-KVS 4 max.**	COADIS LINE 934 & 934SP	Code	E037648			
■ **2 electrothermic four-way valves* PN 16 heating DN 15 - KVS 1.6 max. - cooling DN 20-KVS 4 max.**		Code	E037591			
■ **2 electrothermic two-way valves PN 16 heating DN 20 - KVS 2.5 max. - cooling DN 20-KVS 4 max.**	COMFORT LINE 64-	Code	E037648			
■ **2 electrothermic four-way valves* PN 16 heating DN 20 - KVS 2.5 max. - cooling DN 20-KVS 4 max.**		Code	E037591			

* three-way valve(s) with bypass.

* * Refer to instruction manuals for information on the maximum allowable differential pressures and the maximum operating pressures based on the KVS of the valve used.

(1) MAJOR LINE: 2-pipe setup + electric battery with one resistor only.

(2) For higher capacities, an optional relay or a relay supplied by the customer is required.

(3) Not including Coadis Line and Mélody 2:
CDL600: P max. 1200 W
CDL900 and Mélody 2: Relay included in the basic unit

CODING FOR UNIT FOR RECIRCULATED AIR APPLICATIONS ONLY

COADIS LINE 600 & 900 - COMFORT LINE MAJOR LINE		AUTOMATICALLY BALANCED VALVES FITTED AND WIRED	
230/1/50 valve - Fittings not mounted or wired Δ Pv from 30 to 400 kPa - To be set on-site			
2-tube and 2-tube cooling + electric systems			
■ **1 automatically balanced two-way valve 90 - 450 l/h PN 16 - DN10**	MAJOR LINE 102-, 202-, COMFORT LINE 02-,12-	Code	E048812
■ **1 automatically balanced two-way valve 150 - 1050 l/h PN 16 - DN15**	COADIS LINE 612, 622, 632 MAJOR LINE 302-, 402-, COMFORT LINE 22-,32- COADIS LINE 922	Code	E048813
■ **1 automatically balanced two-way valve 180 - 1300 l/h PN 16 - DN20**	MAJOR LINE 502-, 602-, COMFORT LINE 42-,52- , 62- COADIS LINE 932 & 932SP	Code	E048814
4-tube system			
■ **2 automatically balanced two-way valves 90 - 450 l/h cooling and 30-210 l/h heating PN 16 - DN10**	MAJOR LINE 104-, 204-, COMFORT LINE 04-,14-	Code	E048815
■ **2 automatically balanced two-way valves 150 - 1050 l/h cooling and 30-210 l/h heating PN 16 - DN10**	COMFORT LINE 24-	Code	E048816
■ **2 automatically balanced two-way valves 150 - 1050 l/h cooling and 90-450 l/h heating PN 16 - DN15**	COADIS LINE 624, 634 MAJOR LINE 304-, 404-, COMFORT LINE 34- COADIS LINE 924	Code	E048817
■ **2 automatically balanced two-way valves 180 - 1300 l/h cooling and 90-450 l/h heating PN 16 - DN20**	MAJOR LINE 504-, 604-, COMFORT LINE 44-,54-	Code	E048818
■ **2 automatically balanced two-way valves 180 - 1300 l/h cooling and 105-1050 l/h heating PN 16 - DN20**	COADIS LINE 934 & 934SP COMFORT LINE 64-	Code	E048819

Note for 4-tube units:
Coadis Line 600: Cooling valve fitted/Heating valve supplied in kit
Coadis Line 900: Cooling valve and Heating valve supplied in kit
MajorLine: Cooling valve fitted/Heating valve supplied in kit
Comfort Line: Cooling and Heating valves fitted

389

CODING FOR UNIT FOR RECIRCULATED AIR APPLICATIONS ONLY

Description		Application	Codes
RTR-E 7015	**Function** ■ Heating and cooling ■ Control on ventilation **Temperature range + 5 °C to + 30 °C** **Components** ■ 1 sensing element - bimetal - changeover switch ■ 1 temperature adjustment button ■ 1 unipolar on/off (0/1) switch ■ 1 manual heating/cooling (winter/summer) toggle switch ■1 x 3-speed ventilation switch **Supply voltage** 230 V - 50/60 Hz **Breaking capacity** ■ 3 A, inductive circuit (motor) L x l x H = 127.5 x 75 x 25.5 mm	■ All terminal units	5201023
RTR-E 7009	**Function** ■ Heating/cooling, with extra automatic changeover thermostat ■ Control on ventilation **Temperature range + 5 °C to + 30 °C** **Components** ■ 1 sensing element - bimetal - changeover switch ■ 1 temperature adjustment button ■ 1 unipolar on/off (0/1) switch ■ 1 x 3-speed ventilation switch **Supply voltage** 230 V - 50/60 Hz **Breaking capacity** ■ 3 A, inductive circuit (motor) L x l x H = 127.5 x 75 x 25.5 mm	■ All terminal units	7124612
RTR-E 7012	**Function** ■ Cooling and heating ■ Control on: - Water coil solenoid valve - Electric heater with or without relay ■ Permanent ventilation **Temperature range + 5 °C to + 30 °C** **Components** ■ 1 sensing element - bimetal - changeover switch ■ 1 temperature adjustment button ■ 1 unipolar on/off (0/1) switch ■ 1 manual heating/cooling (winter/summer) toggle switch ■ 1 x 3-speed ventilation switch **Supply voltage** 230 V - 50/60 Hz **Breaking capacity** ■ 3 A, inductive circuit (motor) ■ 6 A, resistive circuit (electric heater, 1400 W max.) L x l x H = 127.5 x 75 x 25.5 mm	■ COMFORT LINE/ MAJOR LINE/COADIS LINE 600 - Electric heater 1400 W max. - Compulsory relay from 1400 W ■ COADIS LINE 900 & MELODY 2 - Electric heater 3000 W max. “Relay built-in to the device”	5201024
RTR-E 7011	**Function** ■ Heating only or cooling only ■ Control on water coil solenoid valve ■ Permanent ventilation **Temperature range + 5 °C to + 30 °C** **Components** ■1 sensing element - bimetal - changeover switch ■ 1 temperature adjustment button ■ 1 unipolar on/off (0/1) switch ■ 1 x 3-speed ventilation switch **Supply voltage** 230 V - 50/60 Hz **Breaking capacity** ■ 3 A, inductive circuit (motor) ■ 6 A, resistive circuit (electric heater, 1400 W max.) L x l x H = 127.5 x 75 x 25.5 mm	■ All terminal units	5201018

CODING FOR UNIT FOR RECIRCULATED AIR APPLICATIONS ONLY

Description		Application	Codes
RTR-E 7203 	**Function** ■ Heating and cooling with deadband ■ Control on: - Water coil solenoid valve(s) - Electric heater with or without relay ■ Permanent ventilation **Temperature range + 5 °C to + 30 °C** **Components** ■ 1 sensing element - changeover switch with midpoint (rest position) with fixed 3 K deadband ■ 1 temperature adjustment button ■ 1 unipolar on/off (0/1) switch ■ 1 x 3-speed ventilation switch **Supply voltage** 230 V - 50/60 Hz **Breaking capacity** ■ 3 A, inductive circuit (motor) ■ 6 A, resistive circuit (electric heater, 1400 W max.) L x l x H = 127.5 x 75 x 25.5 mm	■ COMFORT LINE/MAJOR LINE/COADIS LINE 600 - Electric heater 1400 W max. - Compulsory relay from 1400 W ■ COADIS LINE 900 & MELODY 2 - Electric heater 3000 W max. “Relay built-in to the device”	5201021
Potentiometer for variable speed control 	**Function** ■ Manual variation from 0 to 100% of the Brushless fan speed **Components** ■ Potentiometer with stop position **Supply voltage** 230 V-50-60 Hz **Outlet** ■ 0 - 10 V (8 mA max.) L x l x H = 82 x 82 x 65 mm	■ Comfort units equipped with Brushless motor management 0 - 10 V	7180650

4

V30

Electronic on/off
air or water control system

Wall-mounted thermostat
with potentiometer

Hotels version with
graduated potentiometer

Factory-recessed thermostat

Customised performance
with a ***low cost*** *solution*

General description

The **V30** control system is a specific CIAT control system with an innovative design, dedicated to fan coil units, and developed using our expertise.

The V30 control system is a CIAT electronic control system devised to control a non-independent air handling terminal unit (ductable, cassette-type fan coil units...) for applications using 2 tubes, 2 tubes/2 wires, 4 tubes with recirculated air.

There are two types of V30 controls:

- Air control types, which act on the ventilation. This application has its drawbacks when used with vertical devices: the coil continually supplies cold water or hot water, which creates an incorrect temperature reading at the intake.
- Water control types, which act on two-way valves or four-way valves with a 230 V electrothermic motor and ventilation (recommended to ensure comfort levels).

The V30 control is available in a built-in version factory-fitted in a fan coil unit to be mounted under a sill, or a wall-mounted version to be connected by the installer.

Description

The V30 control is an on/off type control, which can be configured for the chosen application on site using 8 switches.

It has a potentiometer for setting the required temperature, which can be adjusted across a range of +/- 6 °C.

The wall-mounted version is available with a potentiometer graduated in degrees on request.

Two temperature setpoints: heating (19 °C) and cooling (factory-set at 25 °C).

The cooling setpoint can be configured on-site (25 °C or 23 °C).

The V30 has a selector to actuate three manual ventilation speeds.

The operating statuses of the thermostat are displayed using 3 LEDs: comfort/heating/cooling on.

The changeover is managed automatically by the thermostat via a water temperature sensor or via a signal from an external dry contact.

When heating or cooling is requested, the fan is triggered automatically at the speed selected by the user.

The V30 controls the heating via the electric heater in time-proportional mode, according to the ventilation speed selected, to prevent the comfort unit overheating.

The thermostat manages the fan delays required for unit shut down.

If the selector is in the off position, the thermostat keeps the room in which it is installed frost-free at a setpoint of 8 °C.

A dry contact input, which can be configured on-site, enables the thermostat to be automatically switched to economy mode (automatic shift of +/- 5 °C in the heating and cooling setpoints) or frost protection mode (heating setpoint +8 °C).

See our instruction manual for more detailed information.

393

V30

Electronic on/off
air or water control system

			MAJOR LINE COMFORT LINE COADIS LINE	MELODY 2 (1)
CONTROL SYSTEM ASSEMBLY **V30** electronic On/Off controller Terminal with **potentiometer** Wall-mounted or built-in version (without disconnect switch) **No valve** Return sensor (for the built-in version) Without valves and fittings				
V terminal: built-in, fitted and wired in the factory	**V**		*Code*	
H terminal: wall-mounted, to be wired by the installer		**H**		
AIR REGULATION (without control valves, not recommended for vertical units*)				
2-tube system				
• **Heating only** (or heating/cooling selection by external contact)	A30V	A30H	E038859	●
• **Cooling only** (or heating/cooling selection by external contact)	A32V*	A32H	E038862	●
• **Automatic heating/cooling with changeover sensor** (supplied separately on wall-mounted versions)	A34V*	A34H	E038866	●
2-tube system + max 2000 W electrics				
• **Cooling + electrics** or Heating/cooling + electrics** ** with water temperature sensor supplied in a kit.	A38V*	A38H	E038869	●
Supplement for electrical power from 2000 W to 4600 W Included on COADIS LINE 900 and MELODY 2			E038806	●
Option and accessories				
	Return air temperature sensor for wall thermostat, supplied in a kit or changeover sensor kit		**L = 2.5 m** 7209243	●
	Wall thermostat version with potentiometer graduation in degrees for hotels (to be stated when ordering)		7166782	●
System start-up assistance				
Travel expenses (mainland France) + Supplement for work per unit			E002003	●
			E002011	●

(1) MELODY2: V30 not available with HEE motor

*Note: For vertical units equipped with this control principle, the effect of permanent radiation from the heat exchange coil on the sensor may prevent the control system from operating correctly. It is the customer's responsibility to find a suitable location to site this sensor to ensure the units operate correctly.

UNIT CODING FOR RECIRCULATED AIR APPLICATIONS ONLY

VALVE KVS = 1.6 max - G1/2" Max flow rate 1000 l/h			MAJOR LINE COMFORT LINE COADIS LINE	MELODY 2 (1)
CONTROL SYSTEM ASSEMBLY V30 electronic On/Off controller Terminal with **potentiometer** Wall-mounted or built-in version (without disconnect switch) PN 16 valve with 230 V motor No return sensor (for the wall-mounted version) Without valves and fittings			auxiliary pan included, and valves factory-fitted	Two-way valve or four-way valve in a kit, supplied separately Not available with self-balancing 2-way valves(2)
V terminal: built-in, fitted and wired in the factory	**V**		*Code*	
H terminal: wall-mounted, to be wired by the installer		**H**	•	
WATER CONTROL				
2-tube system				
• **Heating only** >1 two-way valve	E30V	E30H	E038432	
			•	
> 1 self-balancing 2-way valve**			E048797	
			•	
> 1 four-way valve*	E31V	E31H	E038467	
			•	
• **Cooling only** >1 two-way valve	E32V	E32H	E038433	
			•	
> 1 self-balancing 2-way valve**			E048798	
			•	
> 1 four-way valve*	E33V	E33H	E038468	
			•	
• **Heating/cooling with 230 V pilot line relay** >1 two-way valve	E34V	E34H	E051073	
			•	
> 1 self-balancing two-way valve** (for use with the CIAT hydraulic module)			E048799	
			•	
• **Automatic heating/cooling with changeover sensor** (supplied separately on wall-mounted versions) > 1 four-way valve*	E35V	E35H	E038484	
			•	
2-tube system + max 2000 W electrics				
• Cooling only + electrics* with deadband >1 two-way valve	E36V	E36H	E038629	
			•	
> 1 self-balancing 2-way valve**			E048800	
			•	
> 1 four-way valve*	E37V	E37H	E038645	
			•	
• Heating/cooling + electrics with 230 V pilot line relay >1 two-way valve	E38V	E38H	E051074	
			•	
> 1 self-balancing two-way valve** (for use with the CIAT hydraulic module)			E048801	
			•	
• Automatic heating/cooling + electrics with changeover sensor (supplied separately on wall-mounted versions) > 1 four-way valve*	E39V	E39H	E038662	
			•	
Supplement for electrical power from 2000 W to 4600 W Included on COADIS LINE 900 and MELODY 2			E038806	
			•	

4

4-tube system			
> 2 x 2-way valves	E40V	E40H	E038688
			●
> 2 x self-balancing 2-way valves **			E048802
			●
> 2 x 4-way valves*	E41V	E41H	E038710
			●
Compulsory supplements for valves with Kvs over 1.6			
Price supplement for **1 x 3/4" 2-way valve** Kvs 2.5 or Kvs 4	MAJOR LINE T5 & T6 Comfort Line T4, T5 and T6 Coadis Line 900 Melody 2		E044008
			●
Price supplement for **1 x 3/4" 4-way valve** Kvs 2.5 or Kvs 4			E038407
			●
OPTION and ACCESSORIES			
	Return air temperature sensor for wall thermostat, supplied in a kit or changeover sensor kit		**L = 2.5 m**
			7209243
			●
	Wall thermostat version with potentiometer graduation in degrees for hotels (to be stated when ordering)		7166782
			●
System start-up assistance			
Travel expenses (mainland France) + Supplement for work per unit			E002003
			●
			E002011
			●

(1) MELODY2: V30 not available with HEE motor
(2) Self-balancing two-way valves for MELODY2: please contact us

* Three-way valve(s) with bypass.
** Valves to be adjusted on-site / for change-over 2-tube operation: please contact us
For 4-tube units: Coadis Line 600: Cooling valve fitted / Heating valve supplied in kit
Coadis Line 900: Cooling valve and Heating valve supplied in kit
MajorLine: Cooling valve fitted / Heating valve supplied in kit
Comfort Line: Cooling and Heating valve fitted

V300

Proportional-Integral
V300 water control

Simplified access with the master/slave function

4 operating modes: complies with RT 2012

Quick and easy to upgrade on site

Centralised timer for managing multiple zones

CIAT concept and design

Eubac certified

The CIAT **V300** networked electronic control is designed for use with system-powered comfort units (ductable units, cassettes, AHUs etc.) in 2-tube, 4-tube, 2-tube + 2 wire applications using recirculated air.

It is available in a water control version with actuation of the 230 V thermo valves in time-proportional mode.

The V300 control is available in a factory-fitted, built-in comfort unit with a standard wall-mounting or a low wall-mounting version to be connected by the installer. The V300 control provides a master/slave function to manage the comfort units installed in meeting rooms or large spaces (e.g. open spaces, lobby).

A serial communication bus (3-wire) connects the master unit to its primary slave, then connects the primary slave to the secondary slave, and so on.

The master communicates the following information to the slaves: setpoints, air and water temperature, current mode, window switch state.

A wall-mounted radio-frequency terminal is available on sites which do not allow wiring (renovation projects etc.).

The installation can be managed using a centralised zone timer located in a distribution box.

Description

The V300 is a Proportional-Integral control. It controls the valve(s), the electric heater and the ventilation speeds. It has an option to select manual or automatic control of the ventilation speed.

All the control parameters are factory set, but these can be changed on site (using the LCD room terminal) to adapt to the constraints of individual sites.

The factory-set comfort temperatures are +19 °C in heating mode (adjustable) and +26 °C in cooling mode (adjustable) with a range of +/-4 °K (adjustable from +/-1 °K to +/- 9 °K).

The control automatically manages the CIAT HEE motors to optimise the energy performance of our comfort units.

The LCD room unit is used to adjust the temperature setpoint in the predefined range, to select on/off and the desired ventilation speed.

Two configurable inputs are used to control the window switch, if applicable, condensate pump faults, Economy mode, etc.

The controller has 4 operating modes: comfort/economy/frost protection/off.

These modes – comfort (+19 °C in heating mode + 26 °C in cooling mode, adjustable), economy (+14 °C in heating mode + 28 °C in cooling mode, adjustable), frost protection (+8 °C) and off — can be activated via a dry contact input (to be combined, for example, with a commercial programmable timer or a key).

A centralised zone timer, to be located in a distribution box, may be used to automatically control the 4 operating modes of your installation over 6 self-contained zones.

See our manual for more detailed information.

397

CENTRALISED MANAGEMENT USING ZONE TIMER IN VERTICAL UNIT

This application enables automatic and centralised management of the 4 operating modes (comfort/economy/frost protection/off) for 30 master or individual comfort units with V300 control loop.

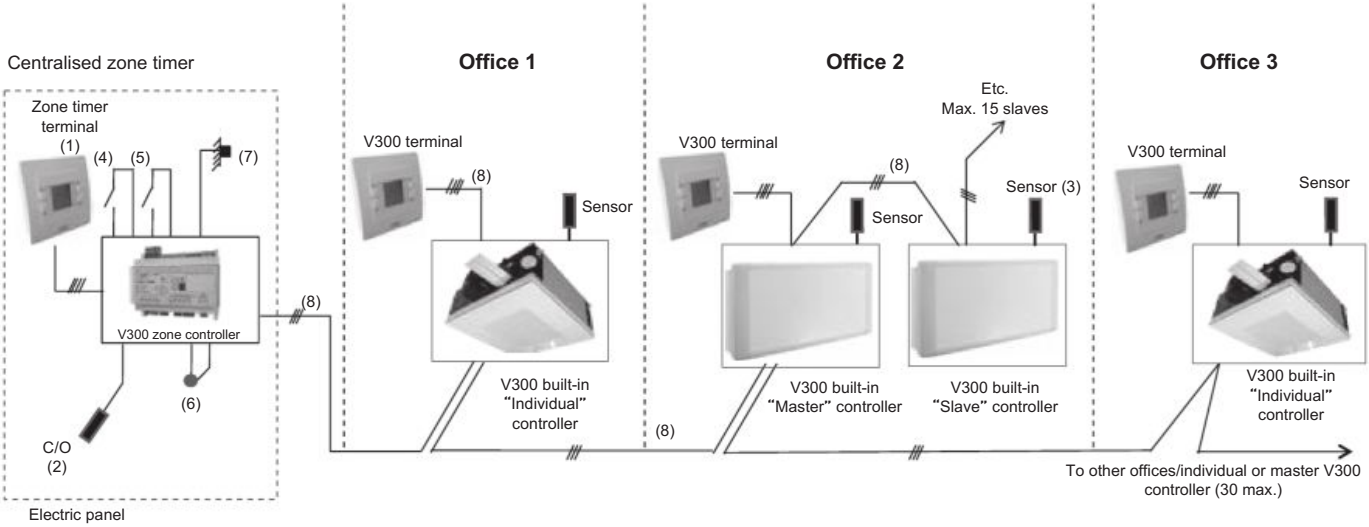

(1) Zone timer terminal for daily/weekly time scheduling over 6 zones.

(2) C/O: changeover sensor for 2-tube reversible heating/cooling application in the case of a central changeover.

(3) Sensor on the return of slave units: two control options possible via parameters:
→ Sensor disabled: the slave controls using the temperature information measured by the master.
→ Sensor activated: the slave controls using its own return temperature information (in the case of large open plan offices).

(4) Contact input to override mode to on/economy/frost protection or switch the installation off.

(5) Bypassing the electric heaters on the comfort units.

(6) 230 V output for automatic on/off control of ancillary equipment (AHU, extractors, etc.)

(7) Outdoor temperature sensor option (activation limit for electric heaters on comfort units and/or advance heating restart).

(8) RS485 communication bus: 2 shielded twisted pairs for connection between controllers and the V300 terminal.

See technical manuals N12-54 (V300 control) and N14-13 (V300 zone timer).

The comfort units are all equipped with V300 control.

A centralised timer, located in the electrical cabinet outside the zones, is used to manage all the comfort units throughout all (or part) of the building (distribution by floor or wings, etc.)

This timer includes an additional configured controller and a terminal connected to this controller.

This terminal is used to:

- Set the daily/weekly timer integrated in the module,
- Distribute all the comfort units across 6 self-contained zones,
- Determine, for each zone, the hourly management over 7 days of the 4 modes: comfort/economy/frost protection/off,
- Set, for each zone:
  - ► The heating and cooling comfort setpoints,
  - ► The heating and cooling economy setpoints,
  - ► Override the time slots per zone, or for the entire building,

The "zone controller" is used to globally manage:

- The setpoint shift range authorised locally in the zones,
- Adjustment of the comfort restart time on the wall-mounted terminal.

The comfort units, whether self-contained or controlled by a master/slave unit, have a wall-mounted terminal.

Users can:

- Change the setpoint, but only within the restricted range defined by the controller/zone timer,
- Switch to Off mode by pressing the button,
- Manually control the ventilation speeds,
- Restart comfort mode, if the time slot set on the timer is programmed to switch the installation to economy/frost protection/off mode. In this case, the restart time depends on the value authorised by the timer.

Optionally, the "zone controller" can manage the installation's changeover, enabling this function to be centralised and allowing 2-way valves to be used (e.g. for variable flow hydraulic circuits).

An "advance" function can be activated to restart heating in winter when the outdoor temperature is low.

Whenever the timer's "comfort switch" is operated, the comfort units restart from their middle setpoints and "auto speed" to ensure the installation is operating uniformly - the key to energy savings.

NOTE: Contact us for more detailed technical information.

UNIT CODING FOR RECIRCULATED AIR APPLICATIONS ONLY

VALVE KVS = 1.6 max - /1/2" Max flow rate 1800 l/h			MAJOR LINE COMFORT LINE COADIS LINE	MELODY 2
CONTROL SYSTEM ASSEMBLY: Configured PI electronic controller, wired Wall terminal with display (7335303) Master-Slave management PN 16 valve with **230 V motor** With return air sensor fitted Without valves and fittings			Auxiliary pan included, valves factory fitted Fuse disconnect switch included	**Controller unit kit with disconnect switch included and** 2-way or 4-way* **valve kit** supplied separately Self-balancing two-way valves not available (2)
Flush-mounted terminal, wired and fitted in factory	V		CODE	
Wall-mounted terminal, to be wired by installer		H	●	
WATER CONTROL (230 V THERMO VALVE)				
2-tube system				
• **Heating only** > 1 x 2-way valve	E300V	E300H	E048555 ●	
> 1 x self-balancing 2-way valve ** (2)			E048556 ●	
> 1 x 4-way valve*	E301V	E301H	E048557 ●	
• **Cooling only** > 1 x 2-way valve	E302V	E302H	E048555 ●	
> 1 x self-balancing 2-way valve ** (2)			E048556 ●	
> 1 x 4-way valve*	E303V	E303H	E048557 ●	
• **Automatic Heating/Cooling via 230 V pilot line (1)** > 1 x 2-way valve	E304V	E304H	E051075 ●	
> 1 x self-balancing 2-way valve ** (2)			E049041 ●	
• **Automatic Heating/Cooling with fitted changeover sensor** > 1 x 4-way valve*	E305V	E305H	E048558 ●	
2-tube system + 2000 W max. electrics				
• **Cooling only + electrics with deadband** > 1 x 2-way valve	E306V	E306H	E048559 ●	
> 1 x self-balancing 2-way valve ** (2)			E048560 ●	
> 1 x 4-way valve*	E307V	E307H	E048561 ●	
• Auto Heating/Cooling + electrics via 230 V pilot line (1) > 1 x 2-way valve	E308V	E308H	E051076 ●	
> 1 x self-balancing 2-way valve ** (2)			E049042 ●	
• **Automatic Heating/Cooling + Electrics** with changeover sensor supplied fitted > 1 x 4-way valve*	E309V	E309H	E048562 ●	
Supplement for electrical power from 2000 W to 4600 W Included on COADIS LINE 900 & MELODY 2			E038556 ●	
4-tube system				
> 2 x 2-way valves	E340V	E340H	E048563 ●	
> 2 x 2-way self-balancing valves**			E048564 ●	
> 2 x 4-way valves*	E341V	E341H	E048565 ●	
Compulsory supplements for valves with Kvs over 1.6				
Price supplement for 1 x 3/4" 2-way valve Kvs 2.5 or 4	MJL T5 & T6 CFLine T4-T5-T6		E044008 ●	
Price supplement for 1 x 3/4" 4-way valve Kvs 2.5 or 4	CoadisLine 900 Melody 2 600 & 900		E038407 ●	
System start-up assistance (recommended)				
Travel expenses (mainland France) + Supplement for work per unit			E002003 ●	
			E002046 ●	

(1) for 2T + central changeover operation with V300 zone timer: please contact us
(2) Self-balancing two-way valve for Melody2: please contact us
* 3-way valve(s) with bypass
** Self-balancing valves: to be adjusted on-site / for 2T changeover operation: please contact us
Note for 4-tube units with self-balancing valves:
Coadis Line 600: Cooling valve fitted / Heating valve supplied in kit
Coadis Line 900: Cooling valve and Heating valve supplied in kit
MajorLine: Cooling valve fitted / Heating valve supplied in kit
Comfort Line: Cooling valve and Heating valve fitted

399

			MAJOR LINE - COMFORT LINE - COADIS LINE MELODY 2
DEDUCTION FOR USER TERMINAL			
Deduction for not including user terminal with display			E039994
			●
OPTIONS and ACCESSORIES			
	Wall-mounted user terminal with display/wireless/radio-frequency supplied with 2 x AAA/LR03 batteries		7335308
			●
	Radio-frequency receiver kit	For MJ Line:	7388624
			●
		For CF Line and Melody 2	7388625
			●
		For CD Line	7388626
			●
Zone timer with Zone Terminal to control 30 Master or individual Comfort units over **6 self-contained zones** Integrated daily/weekly timer			7335309 + 7335310
			●
			●
ZONE TIMER OPTIONS	Changeover sensor kit (for centralised CO)		7209243
			●
	Outdoor temperature sensor kit		7423427
			●
AIR REGULATION (without control valves, not recommended for vertical units *)			
2-tube system			
• **Heating only** (or heating/cooling selection by external contact)	A300V*	A300H	E048566
			●
• **Cooling only** (or heating/cooling selection by external contact)	A302V*	A302H	E048566
			●
• **Automatic Heating/Cooling with changeover sensor supplied fitted**	A304V*	A304H	E048567
			●
2-tube system + 2000 W max. electrics			
• **Heating/Cooling + Electrics** with changeover sensor supplied fitted	A308V*	A308H	E048568
			●
Supplement for electrical power from 2000 W to 4600 W Included on COADIS LINE 900 & MELODY 2			E038556
			●

Note*: For vertical units equipped with this control principle, the effect of permanent radiation from the heat exchange coil on the sensor may prevent the control system from operating correctly. It is the customer's responsibility to find a suitable location to site this sensor to ensure the units operate correctly.

V3000

PID electronic water control,
3-point, networked KNX

Radio frequency remote control

Factory-recessed thermostat

Wall-mounted terminal with potentiometer

Wall-mounted terminal with display

New generation
networked control
Variable flow HEE function control
CIAT concept & design
EuBac certification

General description

The CIAT **V3000** networked electronic control is designed for use with system-powered air handling terminal units (fan coil units, cassettes, ductable units, etc.) in 2-tube, 4-tube, 2-tube + 2 wire applications using recirculated air.

It is available as a water control with actuation of 3-point 24 V valves which enable optimised control of the room temperature conditions.

Unlike the operation of a thermal actuator, this motor is used to stabilise the valve in any state of opening (from 0 to 100 %), according to the control system requirements.

The V3000 control is available in a built-in version factory-fitted in a fan coil unit to be mounted under a sill, or a wall-mounted version to be connected by the installer.

A radio frequency remote control is available on sites which do not allow wiring (renovation projects etc.).

The V3000 control system communicates via the KNX open protocol (ISO standard 14543-3) ensuring it is completely compatible with other products used on-site.

Description

The V3000 control is a Proportional-Integral-Derivative control. It controls the valve(s), the electric heater and the ventilation speeds. It is available with display terminals or a potentiometer enabling the setting of the indoor comfort conditions to be optimised.

The control settings (PID, deadband ventilation, etc.) are preset in the factory but can be adjusted using the room terminal with display.

Without connecting to a BMS, the V3000 can manage the master/slave function on a KNX bus (bus power supply provided as an accessory).

The V3000 control automatically controls the CIAT HEE concept to improve the energy performance of our fan coil units:

- Modulating output for actuating the fan speed according to ambient requirements,

Consult our manuals for more detailed information on the operation and range of configuration options for this control system.

KEY ADVANTAGES

Modulating valve comparison

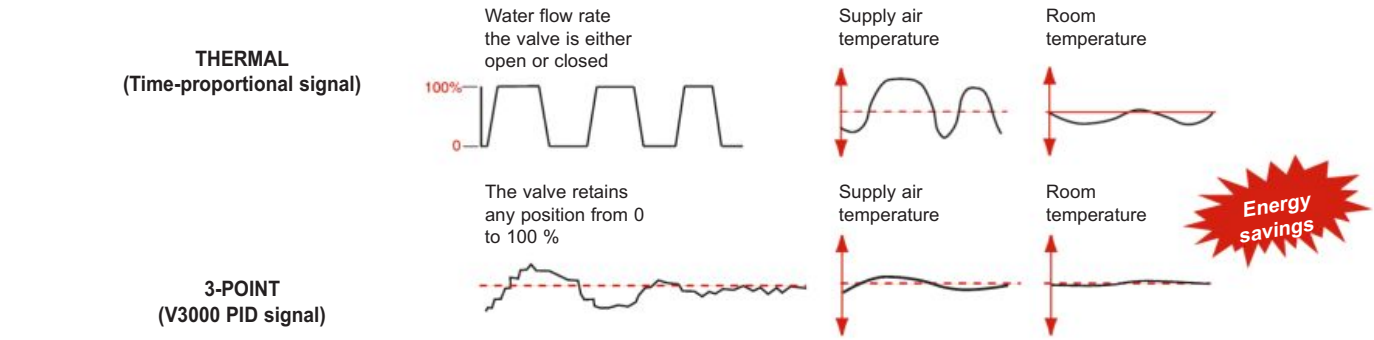

- A 3-point motor enables a valve to be to actuated as close as possible to the control system requirements, by controlling its position between 0 and 100 % (water flow control). The terminal unit supply air temperature is more stable and the room temperature varies very little (variations cause discomfort).
- This temperature stability not only ensures optimal comfort, it also allows energy savings to be made.
- The 3-point motor uses no electricity when the thermal balance is struck, unlike the thermal actuator (return on investment on the energy savings made: 2 - 3 years).
- The service life of a 3-point motor is approximately twice as long as a thermal actuator.
- To facilitate its maintenance, the motor is equipped with a plug connector.

Electric heater management

- 2-tube 2-wire control algorithm (application: cooling + electrics or heating/cooling + electrics).

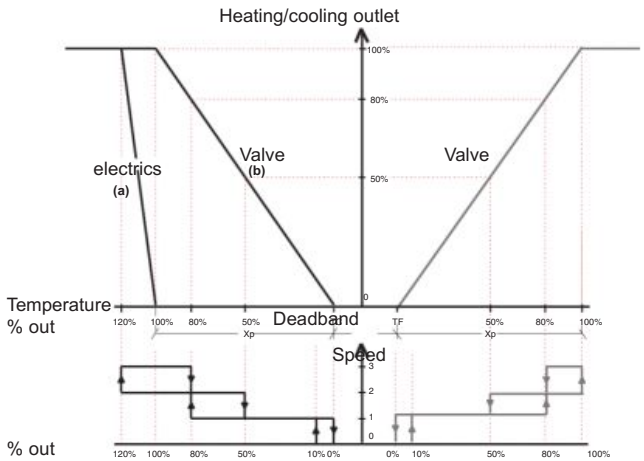

- Presence of hot water, operation of the electric heater as per (a).
- Absence of hot water, operation of the electric heater as per (b).

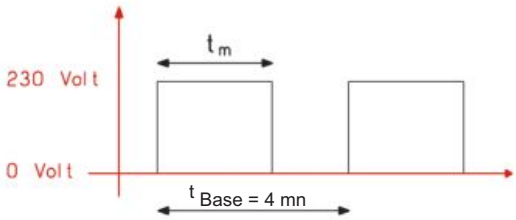

Duty cycle: RC $= \frac{t_m}{t_{Base}}$

The controller acts simultaneously on:

- The gradual opening or closing of the control valve,
- The electric heater operating in time-proportional mode,
- The 3 fan speeds or switching the fan off.

Priority is given to low-speed operation (medium speed activated from 80 % valve opening). For heating/cooling + electric heater, priority is given to heating the hot water; the electric heater is only activated as an additional measure. If there is no hot water, the electric heater is triggered when there is a heating requirement. Note: the above algorithm supposes that the fan speed is selected automatically and that the ventilation is off in the deadband. It does not demonstrate the proportional characteristic. In reality, the control is Proportional-Integral-Derivative.

The variation in the duty cycle enables the electrical energy to be modulated thereby enabling a similar function to that of a progressive valve. If the user manually selects low speed, the duty cycle will be limited to 50 %. If the user selects medium speed, the duty cycle will be limited to 80 %. This limitation prevents overheating in the terminal unit. The controller can limit the duty cycle based on the outdoor temperature.

Timer

The V3000 control integrates a timer, as standard, which can be set from 30 mins to 24 hours (in 30-min increments). This function enables the user to manually start the room air conditioning as he or she enters. It will switch off automatically (e.g.: after four hours for morning and evening time slots).

CODING FOR UNIT FOR RECIRCULATED AIR APPLICATIONS ONLY

VALVE KVS = 2.5 max. - G1/2" max. Max. water flow 1800 l/h			MAJOR LINE COMFORT LINE COADIS LINE	MELODY 2
CONTROL SYSTEM ASSEMBLY Configured PID electronic control, wired Display terminal PN 16 valve with **24 V 3-point** motor Without valves and fittings			auxiliary pan included, valves factory fitted Fuse disconnect switch included	Controller unit kit with disconnect switch included and 2-way or 4-way* valve kit supplied separately Self-balancing two-way valves not available (2)
V terminal: built-in, fitted and wired in the factory	V		*Code*	
H terminal: wall-mounted, to be wired by the installer		H		
SH terminal: wall-mounted, to be wired by the installer + supply air limit temperature sensor. Not available with the radio-frequency remote control option.		SH	€	
WATER CONTROL (24 V 3-POINT VALVE)				
2-tube system				
• Heating only > 1 two-way valve"	E3000V	E3000H	E047501	●
		E3000SH(1)	●	NOT AVAILABLE
> 1 x self-balancing two-way valve** (2)		E3000H	E048803	●
		E3000SH(1)	●	NOT AVAILABLE
> 1 x 4-way valve*	E3001V	E3001H	E047521	●
		E3001SH(1)	●	NOT AVAILABLE
• Cooling only > 1 two-way valve"	E3002V	E3002H	E047501	●
		E3002SH(1)	●	NOT AVAILABLE
> 1 x self-balancing two-way valve** (2)		E3002H	E048803	●
		E3002SH(1)	●	NOT AVAILABLE
> 1 x 4-way valve*	E3003V	E3003H	E047521	●
		E3003SH(1)	●	NOT AVAILABLE
• Automatic heating/cooling with changeover sensor fitted >1 four-way valve*	E3005V	E3005H	E047561	●
		E3005SH(1)	●	NOT AVAILABLE
2-tube system + electrics, max 2000 W				
• Cooling only + electrics* with deadband >1 two-way valve	E3006V	E3006H	E047581	●
		E3006SH(1)	●	NOT AVAILABLE
> 1 x self-balancing two-way valve** (2)		E3006H	E048804	●
		E3006SH(1)	●	NOT AVAILABLE
> 1 x 4-way valve*	E3007V	E3007H	E047601	●
		E3007SH(1)	●	NOT AVAILABLE
• Automatic heating/cooling + electrics with automatic changeover sensor fitted > 1 x 4-way valve*	E3009V	E3009H	E047641	●
		E3009SH(1)	●	NOT AVAILABLE
• Supplement for electrical power from 2000 W to 4600 W included on COADIS LINE 900 & MELODY 2			E038556	●
4-tube system				
> 2 x 2-way valves	E3040V	E3040H	E047661	●
		E3040SH(1)	●	NOT AVAILABLE
> 2 x self-balancing two-way valves***		E3040H	E048805	●
		E3040SH(1)	●	NOT AVAILABLE
> 2 x 4-way valves*	E3041V	E3041H	E047681	●
		E3041SH(1)	●	NOT AVAILABLE
Compulsory supplements for valves with Kvs over 2.5				
Price supplement for 1 x 3/4" 2-way valve Kvs 4	Comfort Line T6 Coadis Line 932-934 Melody 2 size 9x		E038563	●
Price supplement for 1 x 3/4" four-way valve Kvs 4			E038571	●
System start-up assistance				
Travel expenses (mainland France) + Supplement for work per unit			E002003	●
			E002046	●

(1) Option not available for Major Line CV/CH, Coadis Line and Melody 2
(2) Self-balancing two-way valve for Melody 2: please contact us
* Three-way valve with bypass.
**: Valves to be adjusted on-site / for 2-tube changeover operation: please contact us

Note for 4-tube units with self-balancing valves:
- Major Line: Cooling valve fitted / Heating valve supplied in kit
- Comfort Line: Cooling and heating valve supplied fitted
- Coadis Line 600 & 900: 2 valves supplied in a kit

Note: Price with wall-mounted user terminal with potentiometer identical to that with display terminal. Please specify the required type of terminal when ordering. Terminal with potentiometer only available wall-mounted

V3000 KNX

PID electronic water control,
3-point, networked KNX

			MAJOR LINE	COMFORT LINE MELODY 2	COADIS LINE
DEDUCTION FOR USER TERMINAL					
Deduction for user terminal with display		*Code*	E039097		
			•		
OPTIONS AND ACCESSORIES					
	Wall-mounted terminal with potentiometer	*Code*	7161243		
			•		
	Blank wall-mounted terminal with sensor No user action possible / designed for public access buildings	*Code*	7161242		
			•		
	Radio-frequency remote control (1 remote control, controls up to eight V3000s located in a single zone)	*Code*	7161247		
			•		
	Radio-frequency receiver kit (1 receiver must be provided per unit) Supplied in a kit	*Code*	7407452	7393361	7350539
			•		
	320 mA KNX bus power supply for max. 64 x V3000 Refer to our manual for the specifications for setting up a KNX bus	*Code*	7222279		
			•		
	KNX timer for control of 60 x V3000 in comfort/economy mode in 8 zones in accordance with manual .09.38	*Code*	7361491		
			•		

404

GESTION D'AIR NEUF

Fresh air control

Occupancy sensor
(fits into suspended ceilings)

Wall-mounted CO_2 sensor

Save energy and optimise the air quality in office buildings

- **R1 pack with occupancy sensor for use in offices**
- **R+ pack with CO_2 sensor for use in meeting rooms**

These systems are designed for offices, meeting rooms and other spaces with varying occupancy rates.

They help to keep down energy costs caused by air changes by adjusting the flow of fresh air to actual room occupancy rates.

Since the treatment of fresh air accounts for up to 70% of the heating and cooling needs in office buildings, this adjustment in the flow of fresh air results in significant energy savings.

R1 PACK FOR OFFICES

Draw fresh air into rooms only when they are occupied:

- R1E motorised damper with dual path calibrated to fresh air and controlled by an occupancy sensor recessed in a ceiling tile:

✔ 1 minimum air flow to ensure clean, healthy air in the room.

✔ 1 nominal air flow when the room is occupied.

■ Example of a system with U model COMFORT LINE.

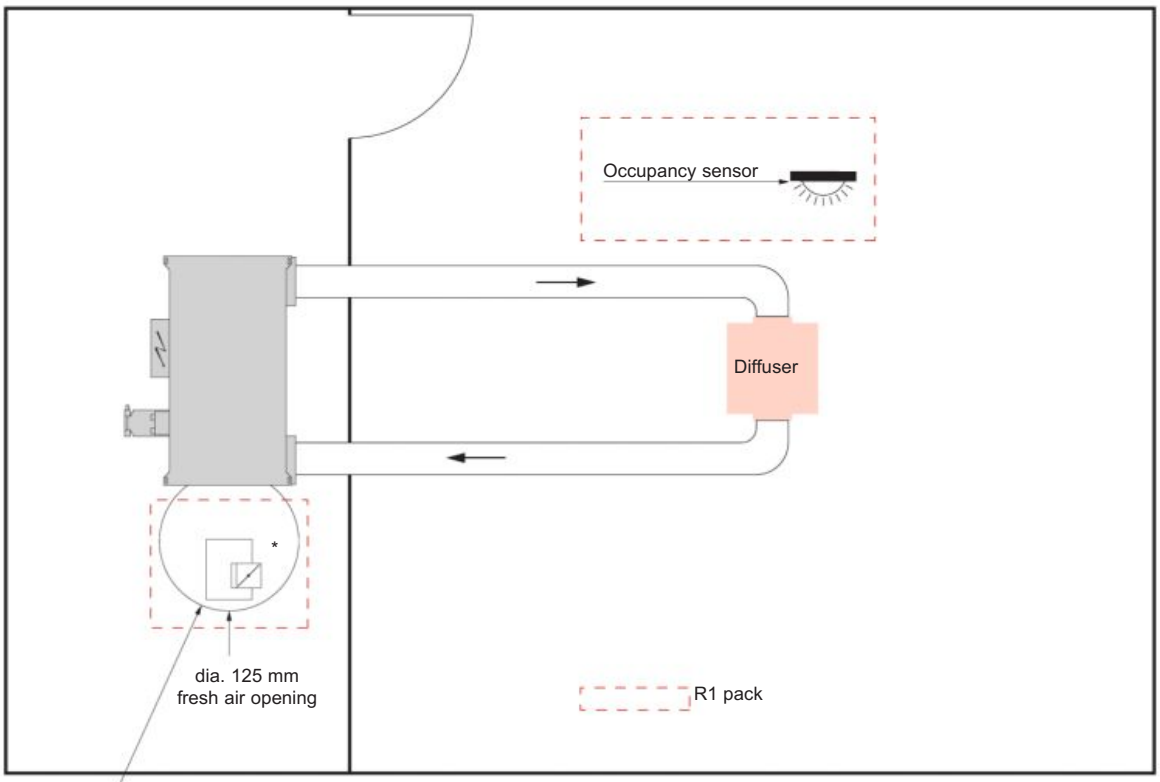

R1E motorised damper (15-45 m³/h)

*Schematic diagram. Actual positions of components not shown.

4

R+ PACK FOR YOUR MEETING ROOMS

Adjust the amount of fresh air according to the number of people present in your meeting rooms.

- The R+E modulating damper with automatically calibrated minimum flow adjusts the amount of incoming fresh air to the amount of CO_2, which varies with number of people inside a room, to maintain clean and healthy indoor conditions.

■ Example of a system using U model COMFORT LINE with a CIAT "COADIS COMBI" diffuser.

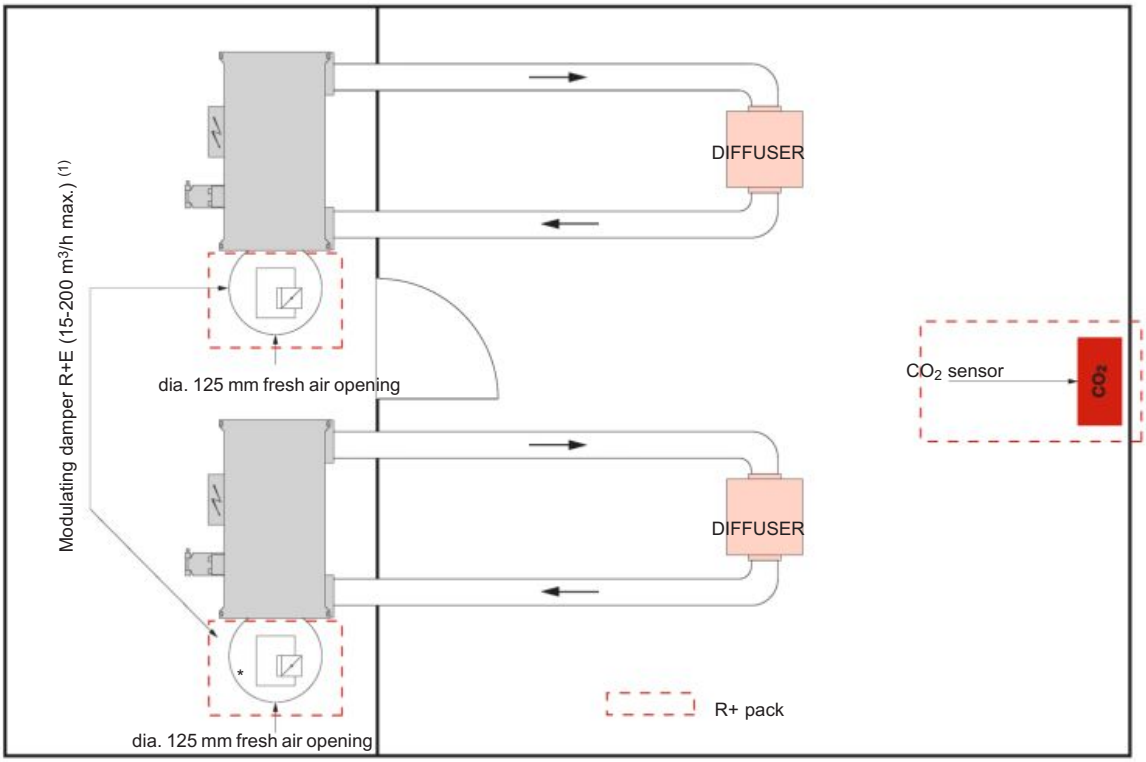

*Schematic diagram. Actual positions of components not shown.

General note regarding installation:

- The intake and exhaust fans on fresh air handlers must be fitted with a variable speed drive (pressure sensor on the air distribution duct).
- The fresh air temperature must be kept constant so as not to affect the control loop on the comfort units (risk of rapid drift in the ambient temperature).

Note **: the network balancing system is not supplied by CIAT (max. air flow for speed of 4.5 m/s.).

(1) Max. recommended fresh air flow: COADIS LINE: 90 m³/h/COMFORT LINE: 200 m³/h

R1 PACK For use in OFFICES Flush-mounted occupancy sensor + Motorised damper R1E dia. 125 mm as per data sheet N07127		Code	7180644 + 7180646
R+ PACK For use in MEETING ROOMS CO_2 sensor 2 (one per four comfort units maximum) + 230/24 V transformer as per circuit diagram 7180642 Dia. 125 mm R+E damper + Modulating actuator (one per comfort unit)		Code Code	7180644 + 7180646 7180644 + 7180646

HYSYS®

Hysys® : the Hydraulic solution

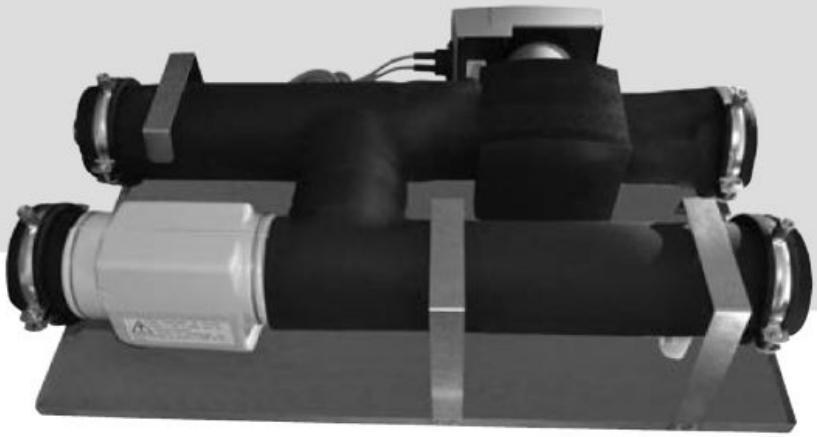

Hydraulic module for the energy performance, comfort and modularity of the Hysys® system

HY-MOD, THE VARIABLE FLOW MODULAR SOLUTION FOR HYSYS®

In light of the stricter F-Gas regulations governing refrigerant, the solution of the water loop as energy transfer fluid has once again become the natural choice for heating and cooling buildings.
Through its Hysys® package, CIAT now offers a complete, high-performance solution for commissioning hydraulic installations with:

- A thermodynamic unit with a low volume of fluid contained inside the machine.
- HEE comfort units perfectly adapted to the needs of different markets.
- **High-efficiency** recovery dual-flow air handling units.
- A Smart CIATControl tablet for system energy optimisation - **variable water temperature.**
- HY-MOD modules for balancing the network and **variable water flow rate.**

DESCRIPTION OF THE MODULE

Placed between the generator and the comfort units, HY-MOD modules comply with regulations governing **network balancing** and ensure the distribution of water for each emitter. The HY-MOD guarantees the **comfort**, **performance** and **conformity** of the installation. It comprises:

- A balancing valve on the primary network
- A primary bypass
- a **secondary accelerator pump with 0 to 100% variable flow** to suit the emitter requirements. The accelerator pump motor uses low-consumption EC technology
- Very thick armaflex insulation
- Used together with V30/V300 controllers, the HY-MOD offers an optional changeover unit to transmit the operating mode information to the comfort units via a pilot line (see intelligent solution double page)

MAIN CHARACTERISTICS

Nominal flow rate	: 0 to 6 m^3/h
Power input	: 16 to 310 W depending on demand
Dimensions	: 775 x 479 x 227 mm
Diameter of the 4 connections	: G 1”1/4 threaded
Module reference	: 7 462 593
C/O unit reference	: 7 401 984

Sizing aid for primary and secondary networks

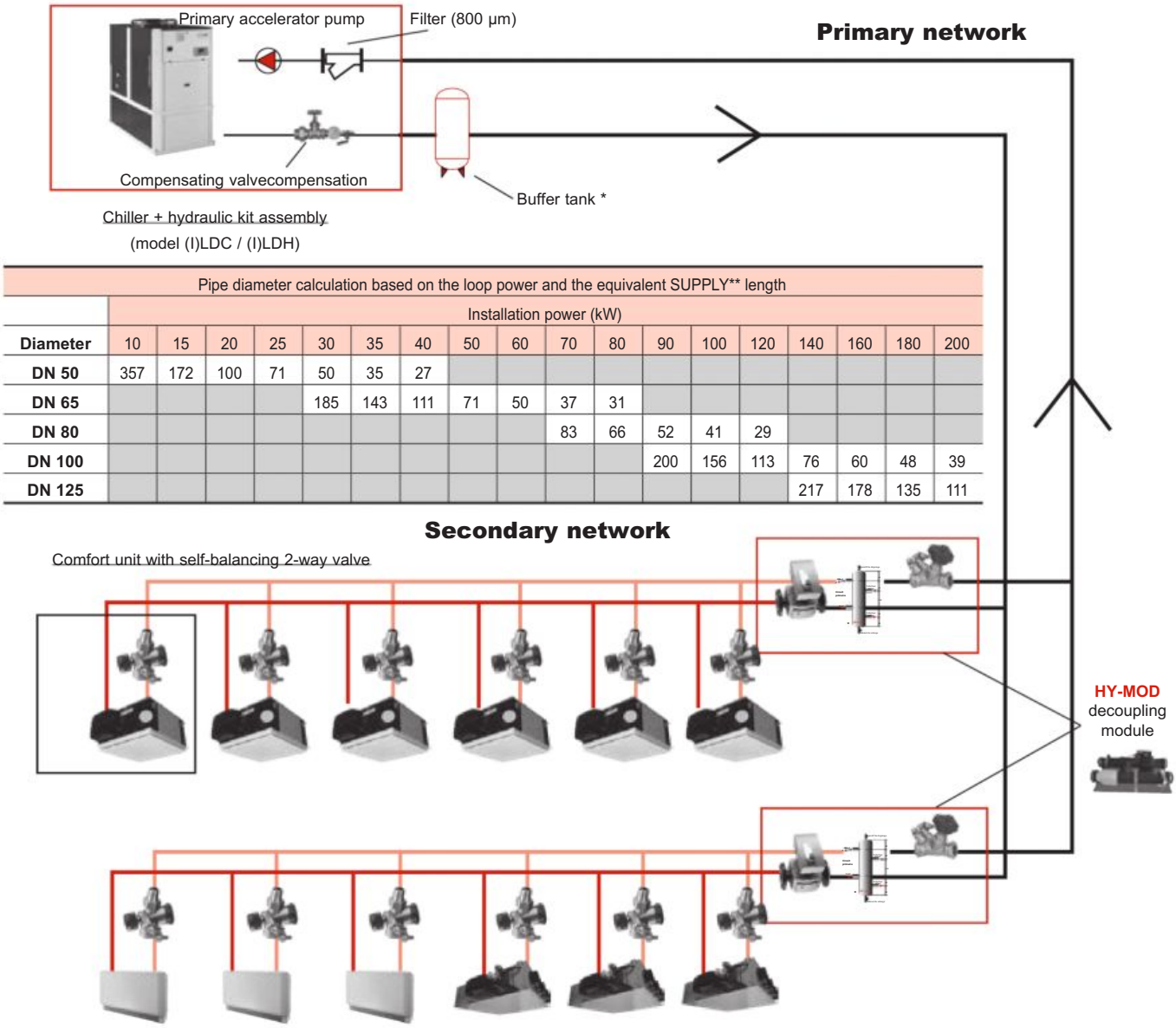

Pipe diameter calculation based on the loop power and the equivalent SUPPLY** length																		
	Installation power (kW)																	
Diameter	10	15	20	25	30	35	40	50	60	70	80	90	100	120	140	160	180	200
DN 50	357	172	100	71	50	35	27											
DN 65					185	143	111	71	50	37	31							
DN 80										83	66	52	41	29				
DN 100												200	156	113	76	60	48	39
DN 125															217	178	135	111

Pipe diameter calculation based on the zone power and the equivalent SUPPLY** length																		
	Zone power (kW)																	
Diameter	2	4	6	8	10	12	14	16	18	20	22	24	26	28	30	32	34	35
DN 25	675	188	85															
DN 32				193	146	96	71	59	44	38								
DN 40						207	150	122	96	79	67	56	48	42				
DN 50										250	207	187	158	140	120	108	97	91

Commissioning and using the module

Benefit from all of CIAT's **experience in monitoring** water loop systems.
As part of its sales package for the Hysys® system, CIAT Service will fine-tune all equipment, configure the Smart CIATControl and hydraulically balance the primary and secondary networks.

This support is bolstered by preventive maintenance contracts, training and a technical audit. This **guarantees the performance** of your HVAC solution.

* To ensure the optimal functioning of the unit, a minimum volume of 14 litres of water per kW is recommended; take into account the compressor's stage 1 power.

** The recommendations and indicated length values are for information only, and in no way engage CIAT's liability .

HYSYS®

Hysys®: the Aeraulic solution

Quality of interior environments and optimal comfort, thanks to the air handling unit linked to the comfort units

Optimised air diffusion

Air diffusion is a determining factor for comfort. CIAT's HYSYS® package offers diffusion solutions via its comfort units with:

- VISUAL 180° and 360° diffuser for the Coadis Line range with Coanda effect enabling excellent temperature uniformity and optimum comfort.

- Range of diffusers associated with the Comfort Line range, to best adapt to your design, comfort and integration requirements.

Modular air change

The Hysys® package systematises the use of FLOWAY high-efficiency dual-flow air handling units for air renewal. The Hysys® HEP version features 2 fresh air flow control modules. This can be controlled centrally (unit operation based on the CO_2 level) or individually (R1 or R+ pack):

- **R1 pack**: Fresh air flow control managed by a presence sensor (individual offices)

- **R+ pack**: Fresh air flow control managed by a CO_2 sensor (meeting rooms)

Purification of interior environments (EPURE)

The air quality is ensured by controlling the **fine particles** inside the building. These are responsible for 70% of health problems linked to IAQ. The Hysys® HEP version works on 3 levels:

- Reinforced filtration of fresh air on the FLOWAY air handling unit
- EPURE function on the comfort units
- Dynamic purification with Smart CIATControl **(Epure Dynamics®)**: Particle sensors associated with the comfort units, guaranteeing a fine particle level below the threshold recommended by the WHO (10 µg/m³).

The Hysys® HEP version is designed to meet requirements concerning health and comfort.

4

SIZING AID FOR THE AIR DUCT NETWORK

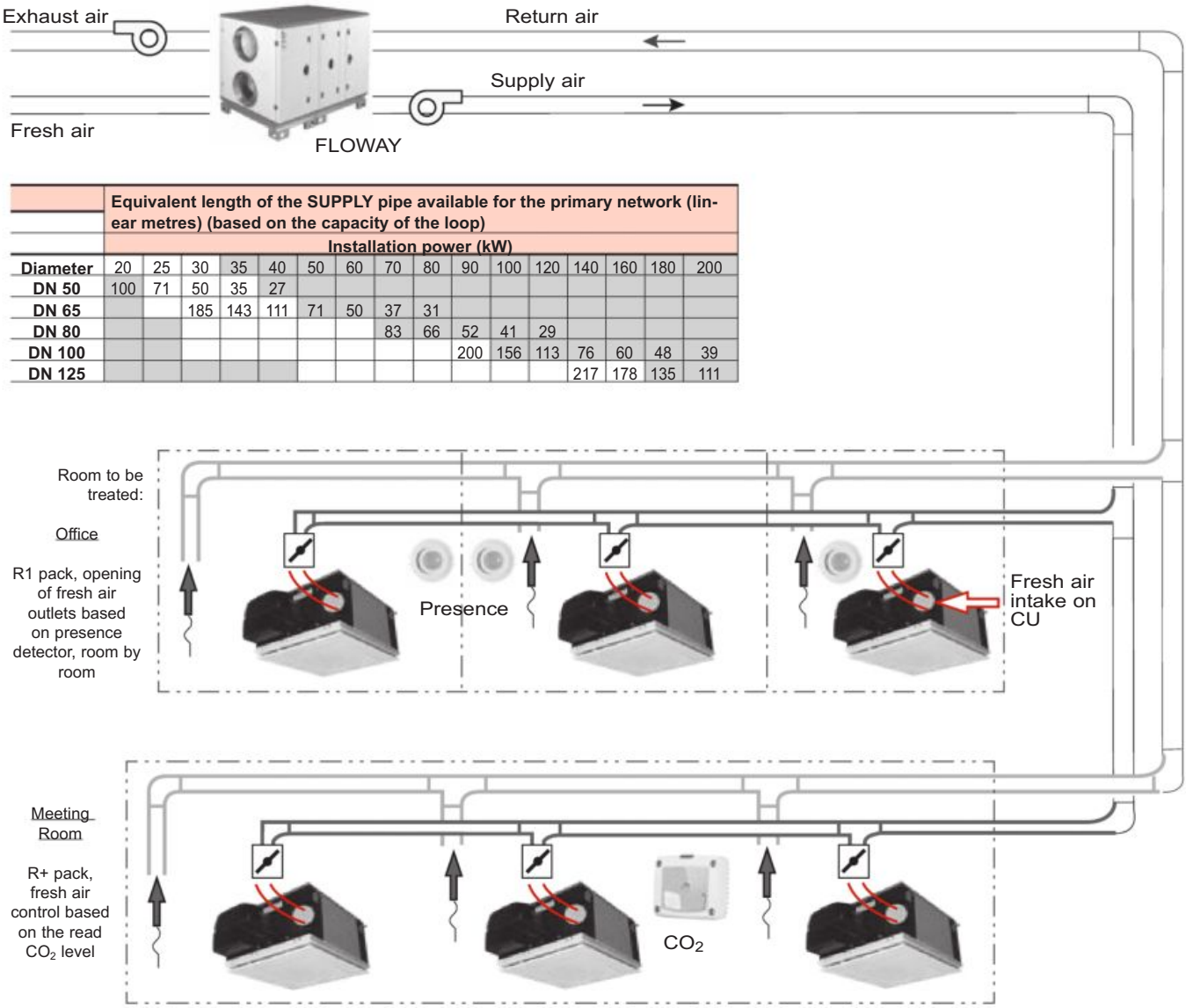

	Equivalent length of the SUPPLY pipe available for the primary network (linear metres) (based on the capacity of the loop)															
	Installation power (kW)															
Diameter	20	25	30	35	40	50	60	70	80	90	100	120	140	160	180	200
DN 50	100	71	50	35	27											
DN 65			185	143	111	71	50	37	31							
DN 80								83	66	52	41	29				
DN 100										200	156	113	76	60	48	39
DN 125													217	178	135	111

	Equivalent length of the SUPPLY pipe available for the secondary network (linear metres) (based on the capacity for the zone in question)															
	Zone power (kW)															
Diameter	6	8	10	12	14	16	18	20	22	24	26	28	30	32	34	35
DN 25	85															
DN 32		193	146	96	71	59	44	38								
DN 40				207	150	122	96	79	67	56	48	42				
DN 50								250	207	187	158	140	120	108	97	91

RULES FOR DETERMINING AIR FLOW RATES

There are various ways of defining the ventilation flow rate required in a building. 3 methods are generally used to calculate the required air flow rates:

- Based on a certain volume of air to treat; generally 1 vol/h, that is to say the air change of the whole volume of the building in one hour (this is calculated by multiplying the surfaces by the average ceiling height).
- Based on average occupancy (number of people per room), use and type of room. In France 25 m^3/h/per person is generally accepted for the majority of buildings.
- In compliance with European standard EN 15251, which sets the required fresh air flow rates depending on how the building is used, its surface area, the number of occupants, pollutant emissions, etc. This is the most exhaustive standard, and takes into account all of these criteria, which generally imposes higher flow rates.

* The recommendations and indicated length values are for information only, and in no way engage CIAT's liability

HYSYS®

Hysys®: the intelligent solution

CIATControl: Intelligence and control for the Hysys® system

SMART CIATCONTROL, LA SOLUTION INTELLIGENTE AU COEUR DU SYSTEME HYSYS®

The SMART CiatControl is a stand-alone management tablet that ensures the quality of indoor air and performance of Hysys® system.

*** Optimizing Indoor Air Quality (IAQ) with Epure dynamics**

We spend 90% of our time in enclosed spaces (work, home, transport). Indoor air is up to 8 times more polluted than outdoor air. Among the pollutants found inside buildings, fine particulate matter (PM) is responsible for 70% of the health problems associated with IAQ. The IAQ and the health of the occupants therefore go through the control of fine particles inside the building. The Hysys® system combined with Epure Dynamics is the ideal solution to capture up to 90% of PM2.5 fine particles.

Epure Dynamics is a high-efficiency particulate clean-up system by local recycling.

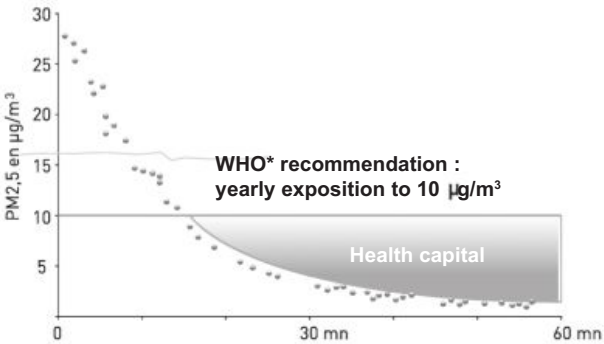

* Results of particulate abatement in an indoor living space equipped with the Hysys solution with the Epure Dynamics function.

The particulate abatement is visible in real time and historiated in Smart CIATcontrol's "Epure Dynamics" menu thanks to the permanent measurement of the particle detector.

How does Epure Dynamics work in the Hysys system?

- Targeted particulate detection with the addition of a specially calibrated sensor for PM 2.5 fine particles to the HYSYS system
- Smart MANAGEMENT of PM 2.5 rate information by SMART CIATControl
- Communication with V3000 electronic regulation for steering interior comfort units
- Action on coadis Line (cassette) or Comfort Line (gainable) comfort units equipped with a specific EPURE filter (filter surface x10) to trigger a particulate purification cycle.

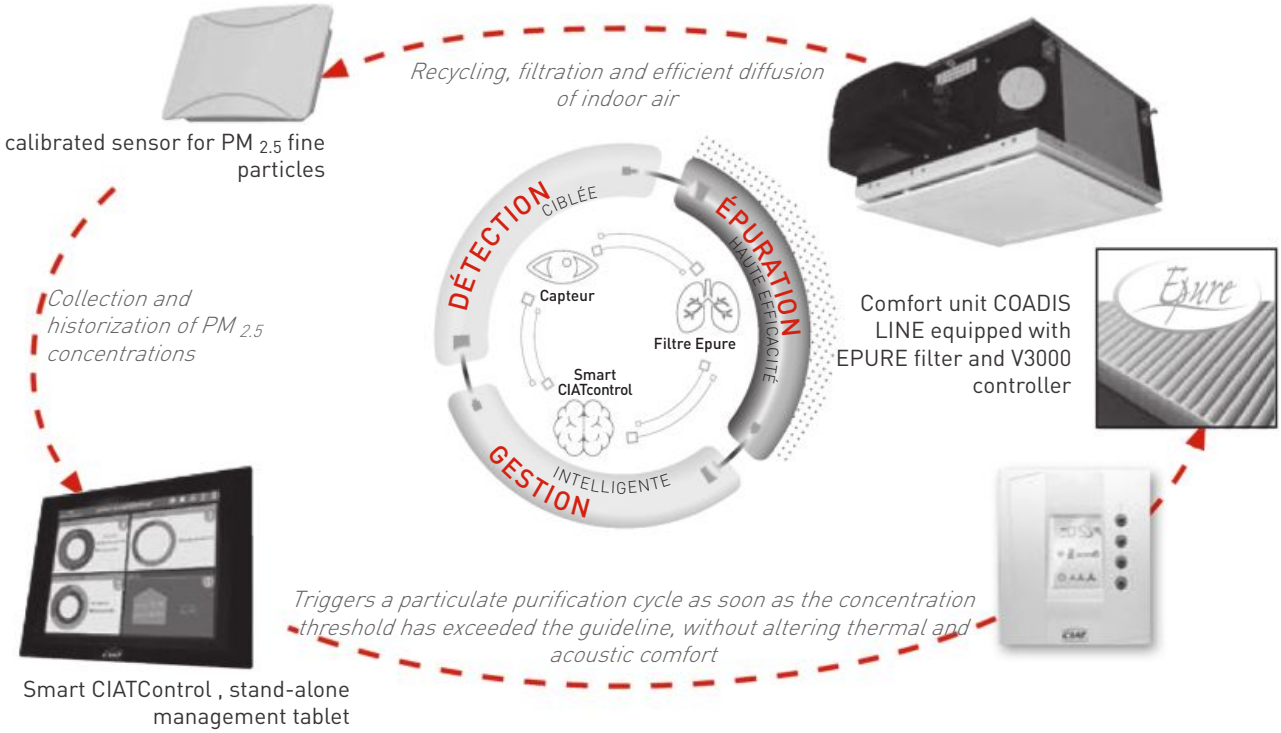

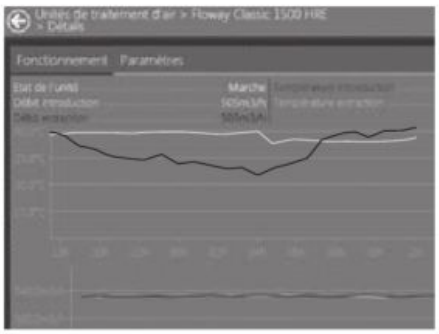

*** Energy optimizing with Optimal Water®**

Depending on the different building needs, Smart CIATControl optimizes the HYSYS system in real time to get the best output from the generator.

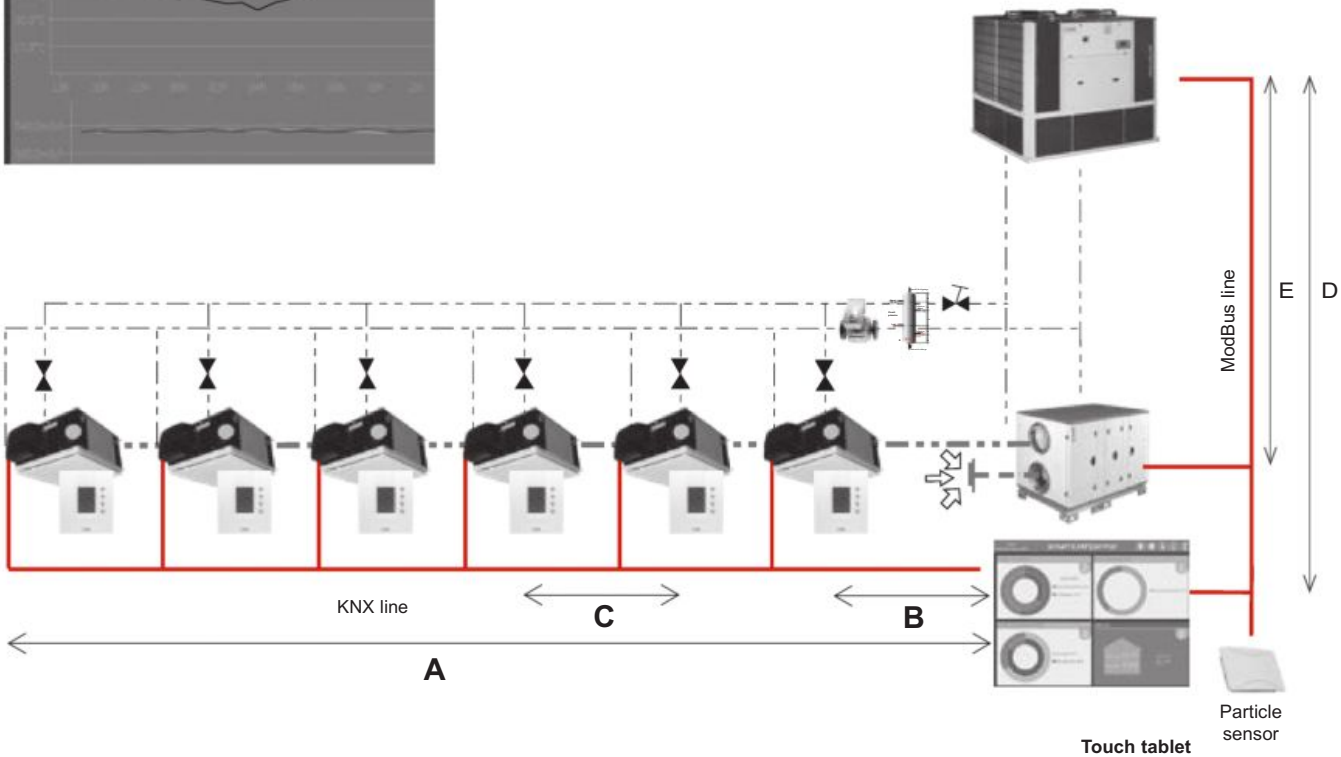

Touch tablet

Remote access to setpoints and parameters of connected products.
Automatic **changeover** - Multi-zone **time schedule** based on 4 stages.
Optimal Stop and Start (building restart time based on stored temperature readings).
Optimal Water® Energy optimisation function that calculates the best water temperature based on emitter requirements.
Epure Dynamics® Indoor air quality optimisation function for individual zones based on the fine particle concentration level.

Lengths A, B, C, D, E (KNX and ModBus lines): see "Sizing aid for connections" table on next page

Sizing aid for Smart CIATControl connections

Protocol Cable reference	Max. connection length (m)	System	Maximum number of connected units		Number of lines
KNX YCYM 2x2x0.8 or JY(St) Y 2x2x0.8 VDE 0815 cable	A: 1000 m Total line length B: 300 m Tablet - V3000 C: 700 m V3000 - V3000	Smart CIATControl 60:	60 V3000 units		1 KNX line
		Smart CIATControl 120:	120 V3000 units		2 KNX lines
		Smart CIATControl180:	180 V3000 units		3 KNX lines
Modbus RS 485 shielded twist-ed pair cable E.g.: 2 x 2 x 0.5	D: 1000 m Total line length E: 500 m Between 2 nodes		Heat pump or chiller	AHU	1 ModBus line
		Smart CIATControl 60:	3	2	
		Smart CIATControl 120:	3	4	
		Smart CIATControl 180:	3	5	

Central changeover (for V30 and V300 control only)

For 2-tube Heating/Cooling comfort units equipped with non-communicating controllers (V30 and V300), Hysys® offers a central C/O solution with the decoupling module. It comprises a unit with a C/O sensor which is positioned on the primary supply circuit and a relay on each unit.

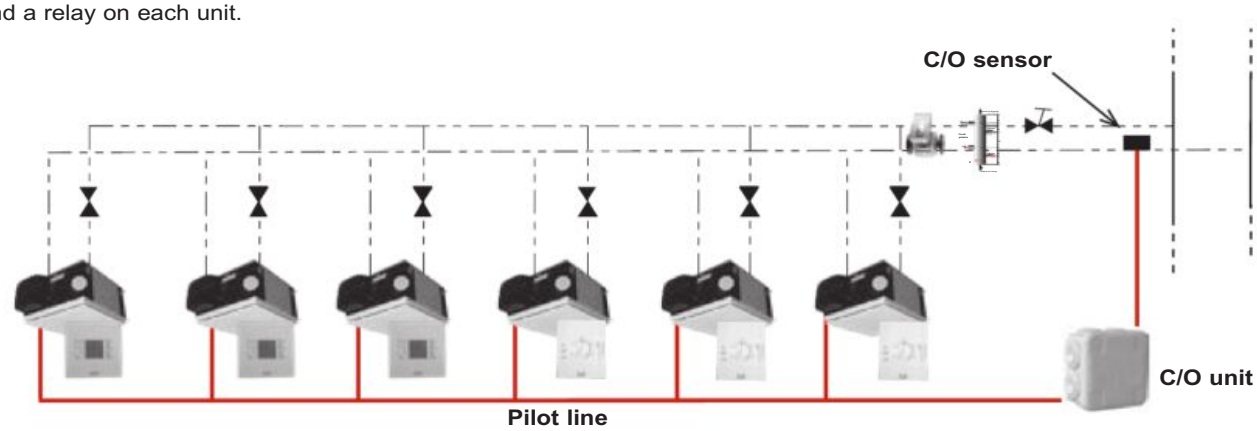

230 V pilot line, 2 x 1.5 mm² cable section; contact us for possibilities and options for these controls.
For V300 application: see our centralised changeover solutions via a zone timer

CIATCONTROL

Smart system solutions from CIAT

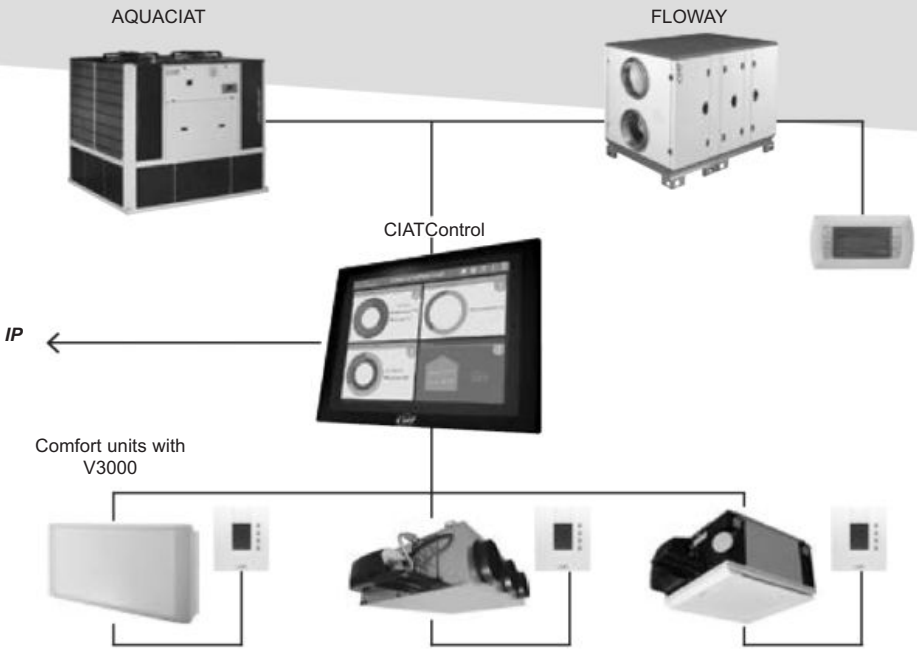

DESCRIPTION

Smart CIATControl

Smart CIATControl facilitates access to the Hysys® system and enables the following:
- centralisation of information for all of the components according to different levels of use,
- manual centralised system changeover,
- Remote management of the building's HVAC equipment. Smart CIATControl allows you to view and control all the equipment remotely from a computer or tablet.

Smart CIATControl enables programmed management of the building:
-Timed programming of all components based on the building's occupancy level,
- Daily/weekly programming according to 4 setpoint levels (comfort/standby/economy/frost protection-off),
- Identification of bank holidays and annual closures,
- Individual setpoint management per room or grouped into building zones.

Smart CIATControl: System memory
-It is able to take temperature readings based on your criteria: (water outlet T°, room T°, outdoor T°, etc.),
- The generator's consumption readings are also logged as per statutory requirements,
- It enables information to be sent to a centralised building management system (with IP BACnet optional).

Smart CIATControl optimises the Hysys system in real time. The patented programming algorithm ensures perfect optimisation of the HVAC system based on variations in the weather and occupancy levels.

■ **Energy optimisation with:**
- Automated changeover of the system according to the calculation of the majority requirements of the building,
- Optimal stop & start: calculates optimisation of the heating and cooling start and stop times based on a programming calculation of the building's inertia,
- Optimal Water®: depending on the differing needs of the building, Smart CIATControl optimises the water loop system in real time to ensure the best performance from the generator.

■ **Air quality optimisation with:**
- Epure Dynamics®: particulate processing of zones according to WHO recommendations.
- Active CO_2: controlling air change according to CO_2 concentrations.

4

Compatible controllers

Smart CIATControl collects information from CIAT controllers using open protocols (KNX and MODBUS).
The following units are compatible:
- comfort units equipped with V3000,
- AQUACIAT LD/ILD and water chillers,
- FLOWAY.

Assistance

Smart CIATControl systems are fully commissioned by CIAT:
- Configuration of units based on building plans,
- Start-up of Hysys system equipment.

CODES

				Standard version	Bacnet version
Smart CIATControl 60 60 x CU max 3 x CS - 2 x AHU Mandatory system start-up, to be charged separately	- 1 KNX 320 mA supply - 10'' touch screen		*Code*	*E047240*	*E047243*
Smart CIATControl 120 120 x CU max 3 x CS - 4 x AHU Mandatory system start-up, to be charged separately	- 2 x KNX 320 mA supplies - 10'' touch screen		*Code*	*E047241*	*E047244*
Smart CIATControl 180 180 x CU max 3 x CS - 5 x AHU Mandatory system start-up, to be charged separately	- 3 x KNX 320 mA supplies - 10'' touch screen		*Code*	*E047242*	*E047245*
1-year EXTENDED WARRANTY including Smart 60 SYSTEM START-UP (France only)			*Code*	*E003817*	
1-year EXTENDED WARRANTY including Smart 120 SYSTEM START-UP (France only)			*Code*	*E003818*	
1-year EXTENDED WARRANTY including Smart 180 SYSTEM START-UP (France only)			*Code*	*E003819*	
Accessories* & Options	- 1 x I/O Module Kit 4I-4O for 1 x Specific chiller or 4 x auxiliary equipment (extractors, etc.)		*Code*	*7258312*	
	- 1 x I/O Module Kit 2I-2O for 1 x specific AHU		*Code*	*7258313*	
	- Epure dynamics function, 1 sensor		*Code*	*E051288*	
	- Epure dynamics function, 2 sensors		*Code*	*E051289*	
	- Epure dynamics function, 3 sensors		*Code*	*E051290*	
	- Epure dynamics function, 4 sensors		*Code*	*E051291*	
	- Epure dynamics function, 5 sensors		*Code*	*E051292*	
	- Epure dynamics function, 6 sensors		*Code*	*E051293*	
	- BACnet levelling for Smart Control 60-120 or 180 including on-site support from a CIAT After-Sales technician (France only)		*Code*	*E039072*	

* Refer to instruction manuals for the possible combinations for this equipment on the various buses.

416

CIAT

AIR TREATMENT SOLUTIONS

AIR HANDLING UNITS

AIR COMPACT P.421
Up to 6 000 m³/h

FLOWAY P.425
500 to 18 000 m³/h

CLIMACIAT P.433
1 000 to 30 000 m³/h

AIRTECH P.447
1 000 to 66 000 m³/h

AIRCLEAN P.451
1 000 to 60 000 m³/h

AIR HEATER

HELIOTHERME 4 000 ..... P.455

CLOSE CONTROL UNITS

EXPAIR P.471
5 to 50kW
1 000 to 12 000 m³/h

MAGISTER P.479
10 to 116kW
3 000 to 27 500 m³/h

SWIMMING POOL DEHUMIDIFIERS

JUNIOR BCP P.485
4 to 15kg water/h

AQUAIR PREMIUM BCP P.491
56 to 74kg water/h

AQUAIR BCP P.497
22 to 74kg water/h

Cooling F = Air flow in m³/h Dehumidification capacity

AIR COMPACT

Air handling unit

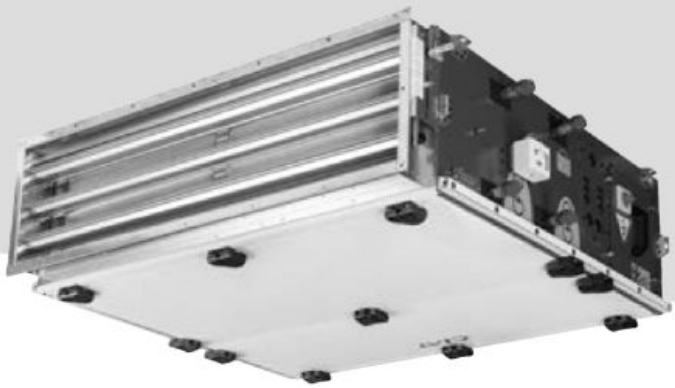

The modular Ultra-Slim AHU is guaranteed to provide the perfect solution
Ideal for a compact installation
Available in a single-flow and dual-flow version

Air flow capacity: up to 6000 m³/h
Operating pressure: up to 1000 Pa

Use

The **AIR COMPACT** air handling unit is a modular ventilation unit, which can be configured to meet all your requirements whilst complying with current standards.

It is available in a single-flow or dual-flow version.

The AIR COMPACT AHU is used for fresh air introduction or compensation, air recirculation, and air extraction using its filtration, heating, cooling, recovery and ventilation functions.

Three versions of the Air Compact AHU are available, ensuring it is easy to integrate:
- horizontal ceiling-mounted version, accessed from underneath,
- horizontal floor-mounted version, accessed from the top,
- vertical wall-mounted version, accessed via the front.

It is available in 3 sizes to provide a perfect match for your requirements, handling air flow rates from 1000 to 6000 m³/h.

At 400 mm thick, it is ultra compact and can be fitted into the tightest of spaces.

This range is particularly well-suited to tertiary buildings:
- administration, offices,
- education facilities, libraries, community centres,
- cafés, hotels, restaurants,
- shopping centres, nursing homes, healthcare facilities,
- collective housing

All installations requiring ventilation.

Range

The AIR COMPACT range comprises three sizes from 1000 to 6000 m³/h.
There are four standardised lengths of module, adapted to the selected configuration and options.

The AHU will therefore comprise one or several modules, depending on your selection; 610, 830, 1100 and 1400 mm modules.

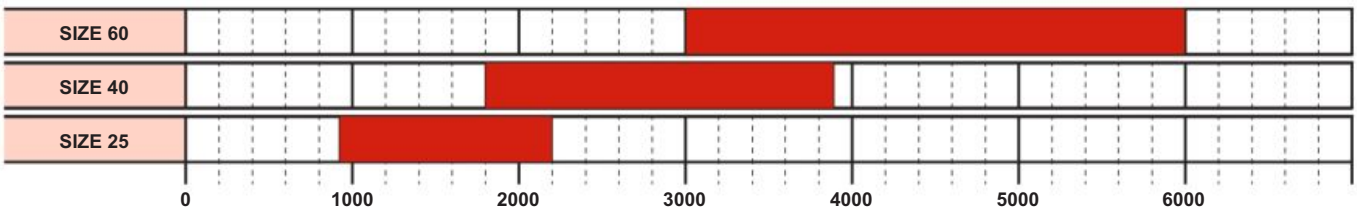

5

DESCRIPTION

Casing

Double-skin panels made from galvanised sheet steel, 0.8 mm thick
External panels made from galvanised steel, precoated in RAL 7035 and RAL 7024
M0/A1 class fire insulation
Mineral wool, thickness 25 mm

Connection and utilities

Hydraulic connection possible on the right or left (to be specified when ordering).
The access doors are positioned according to the choice of model:
- horizontal ceiling-mounted model: access doors located underneath the unit,
- horizontal floor-mounted model: access doors located on top of the unit,
- vertical wall-mounted model: access doors on the front of the unit.

Damper

Uncased external damper
Class 1 leakage as per EN1751; class 3 dampers available as an option
Optional servomotor

Filtration

Filter cells with universal dimensions (287x592 mm)
Three filtration stages possible Pressure tapping as standard on each filtration stage
Pressure switch and pressure gauge available as an option

Filters	Efficiency EN779:2012	Efficiency ISO16890
Compact filters	G4	Coarse 65%
	M5	ePM10 50%
	F7	ePM1 60%
	F9	ePM1 90%
Flexible bag filters	M6	ePM10 65%
	F7	ePM1 60%
	M6	ePM10 70%
Rigid bag filters	F7	ePM1 60%
	F8	ePM1 70%
	F9	ePM1 80%

Heat exchange coil

■ Hydraulic coil
Copper tubes, aluminium fins
Choice of 3 coil sizes for each AHU size
Antifreeze thermostat with optional automatic reset
Stainless condensate drain pan

■ Evaporator coil
Copper tubes, aluminium fins
Choice of 3 coil sizes for each AHU size
Stainless condensate drain pan

■ Electric heater
Shielded resistors in scrolled finned tubes
Two high temperature safety thermostats: one automatic and one manual reset
Anti-radiation screen, depending on the upstream and downstream elements

Output power supplied by the electric heaters			
AHU size	Main casing	Additional box	
	2 stages	2 stages	4 stages
25	2 x 7.5 = 15 kW	2 x 7.5 = 15 kW	4 x 7.5 = 30 kW
40	2 x 12 = 24 kW	2 x 12 = 24 kW	4 x 12 = 48 kW
60	2 x 16.5 = 33 kW	2 x 16.5 = 33 kW	4 x 16.5 = 66 kW

Ventilation

"Plug fan" type direct drive fan motor assembly.
1 or 2 fans for each air flow rate, depending on the size and conditions.

Two motor technologies are available:
AC motor with optional frequency inverter.
EC motor (electronically commutated motor with built-in variable speed control).

AIR COMPACT SIZE		25	40	60
Rated air flow rate (m³/h)		2000	4000	6000
Number of fans for each air flow rate		1	1 or 2	2
AC motors*	Output per unit	0.55 kW / 1.1 kW / 1.4 kW		
	Power supply	3~230/400 V (or 1~230 V with the single-phase inverter option)		
EC motors	Output per unit	1 kW		
	Power supply	3~400 V - 50/60 Hz		

* Requires a frequency inverter

Accessories and options

2-channel mixing box: 3 air flow positions available
3-way mixing box
Angled or straight plenum
Sound attenuator
Adjacent plate heat exchanger (available on sizes 25 and 40)
Control system

Controls (Option)

- Electrics box for power, control and regulation built into the unit, comprising as standard:
- compatibility with a 3~400 V + E - 50 Hz power supply
- main disconnect switch
- 24 V transformer with primary and secondary protection
- protection and control of all electrical components by a circuit breaker and contact switch
- surface-mounted electric heater unit, or delivered unassembled
- control via a PLC, preinstalled with a program developed by CIAT
- hand-held cabled micro-terminal
- fault summary contact
- ventilation actuated at a constant flow rate, constant pressure, or via a CO_2 sensor
- pressure and temperature sensors, depending on the selection

AIR COMPACT Control functions available			Included	Option
Timer	Option to define up to 4 weekly programs and 4 annual programs. The programs available are: temperature and ventilation in eco/comfort mode, frost protection, night cooling		x	
Human Machine Interface	LCD screen		x	
	Room remote control with special interface for the end user			x
Remote actuation and CMS	Communication Protocols	MODBUS RS485 (RTU)	x	
		MODBUS IP		x
		BACnet IP		x
		KNX		x
		LON		x
Filtration	Monitoring filter fouling (via analogue sensor or pressure switch depending on the number of filter stages)		x	
Ventilation management	Maintaining the air flow rate with compensation for filter fouling		x	
	Single zone	Constant volume air flow rate	x	
		Variable air volume via the CO2 sensor		x
	Multi-zone	Constant supply air pressure (for installations equipped with ducted variable flow louvres)		x
Temperature management	Control of the supply air temperature		x	
	Control of the return air or ambient temperature			x
	Free-cooling (depends on the machine configuration)			x
Direct expansion coil	On/off output for outdoor unit in cooling only mode		x	
Heat recovery unit anti-icing	Via DP control on the exhaust air			x
Protection of the internal components	Checking the heat protection for the motors		x	
	Checking the temperature and pressure sensors		x	
	Alarm if the operating limit thresholds are exceeded		x	
Auxiliary contacts	Inputs (dry contacts)	Fire fault	x	
		Remote On/Off	x	
		Electric heater load shedding	x	
		External humidifier fault	x	
	Outputs (dry contacts)	AHU operating feedback	x	
		Maintenance fault summary	x	
		Danger fault summary	x	
		Direct expansion unit On/Off	x	

SPACE REQUIREMENTS AND DIMENSIONS:

DIMENSIONAL SPECIFICATIONS			
AHU size	**25**	**40**	**60**
External dimensions of the single-flow modules (width x height in mm)	750 x 400	1310 x 400	1880 x 400
Casing length (in mm)	610 – 830 – 1100 – 1400: Four standardised lengths of casing, automatically adapted to the components and options selected		

610 mm module ► 1 x 540 mm door
830 mm module ► 1 x 595 mm door

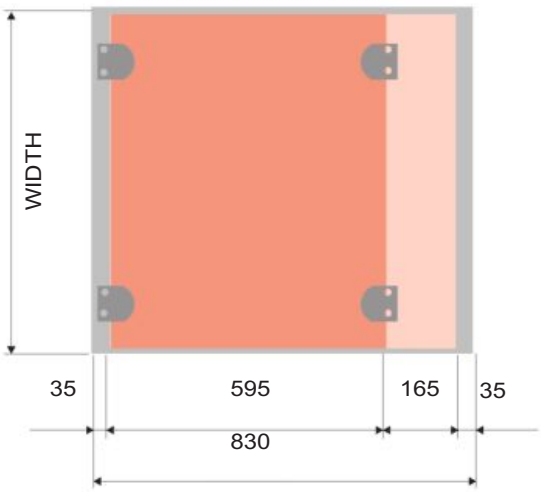

1100 module ► 1 x 595 mm door + 1 x 435 mm door
1400 module ► 1 x 595 mm door + 1 x 735 mm door

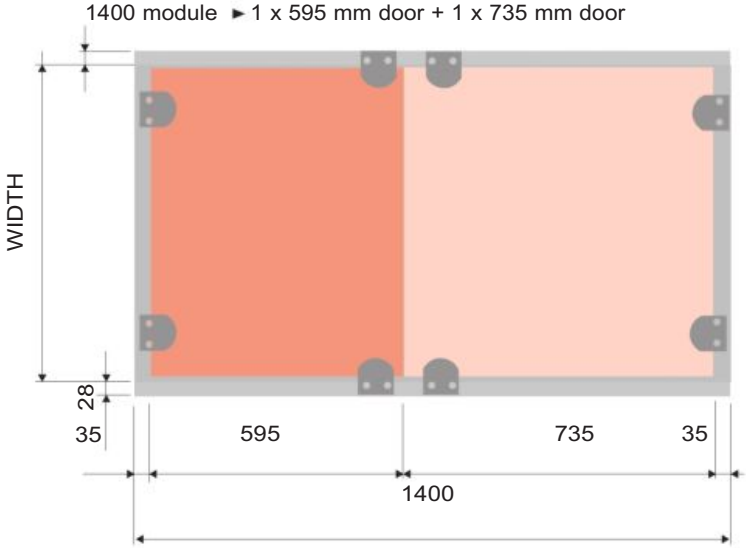

AIR CONNECTION

Air connection

Air connection AHU intake - AHU discharge - Mixing and plate heat exchanger

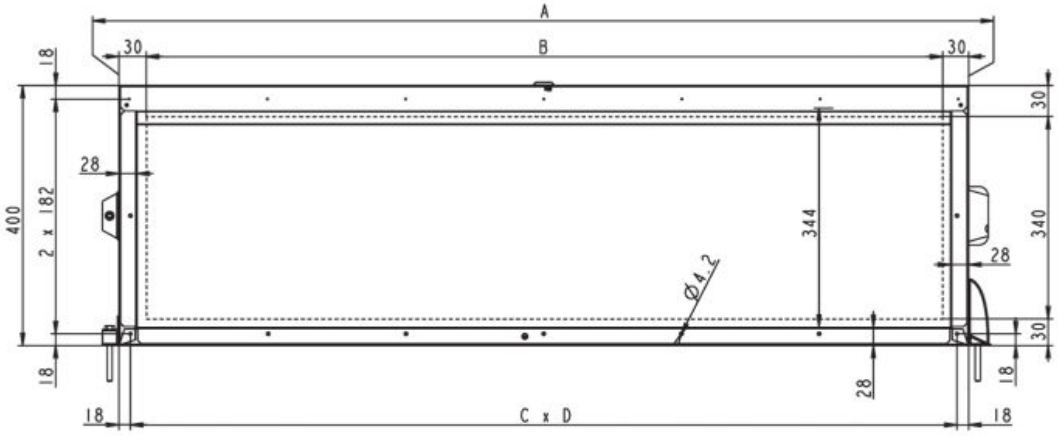

	A	B	C	D
AIR COMPACT 25	750	690	3	238
AIR COMPACT 40	1310	1250	6	212,3
AIR COMPACT 60	1880	1820	8	230,5

Examples of compositions

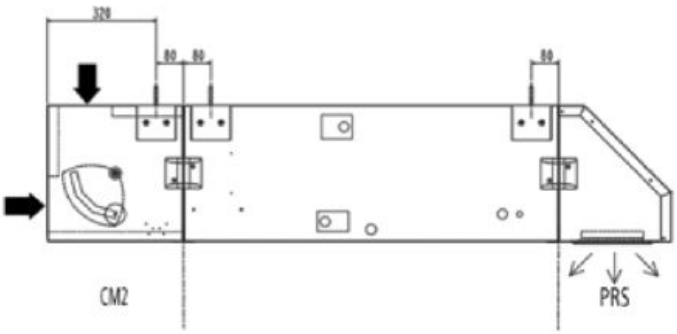

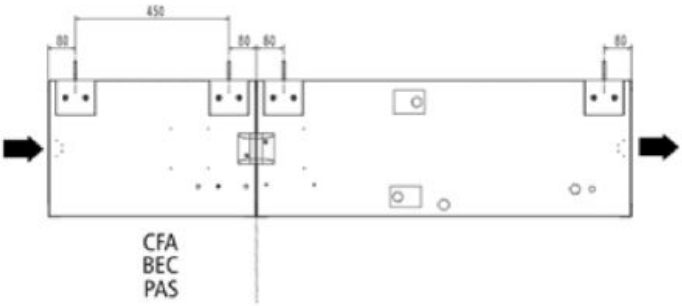

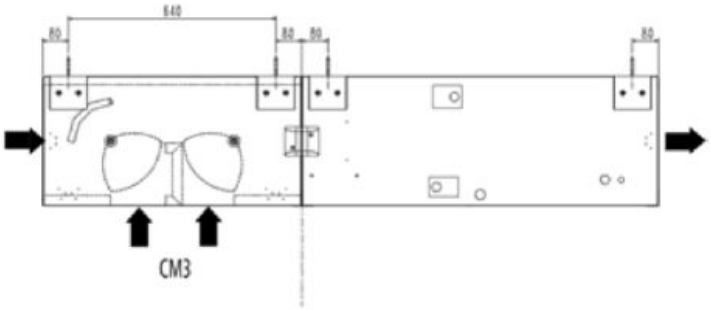

FLOWAY

Air handling unit

Plug & Play AHU with onboard control, Energy class A+ across the entire range, High efficiency heat recovery unit, EC fan motor assembly, high performance

EUROVENT CERTIFIED PERFORMANCE
AHU N°12.06.002
Range : GAMME FLOWAY
www.eurovent-certification.com

Specifications	Class
Mechanical strength	D2
Airtightness	L1
Filter bypass leak	F9
Thermal transmission	T3
Thermal bridge	TB2

Air flow rate: 500 to 18,000 m³/h

Use

The **FLOWAY** dual-flow air handling unit is a PLUG & PLAY ventilation unit equipped with a highly efficient heat recovery unit with plug fans and high performance EC motors, designed to meet all the requirements of recent ecodesign regulations.

Unit supplied ready to use, prewired, preprogrammed in the factory and supplied with a remote control.

It draws clean, fresh air indoors using, on average, 80% less energy than that needed for air conditioning (cooling and heating).

The CTA Floway range is particularly suited to the following applications:

- Administrative buildings, Offices
- Shopping Centres
- Education facilities, Libraries, Community centres
- Nursing homes, Healthcare facilities
- Cafés, Hotels, Restaurants
- Collective housing

All facilities where ventilation is required.

High energy-efficiency heat recovery unit
Two types of high efficiency heat recovery units are available based on the CTA Floway model:

"CONTRA FLOW" plate heat exchanger equipped with a bypass (Classic PHE, Vertical PHE, Ceiling-mounted PHE models)

Rotary heat exchanger (Classic RHE and Access RHE models)
Year-round optimal heat recovery

Air flow range

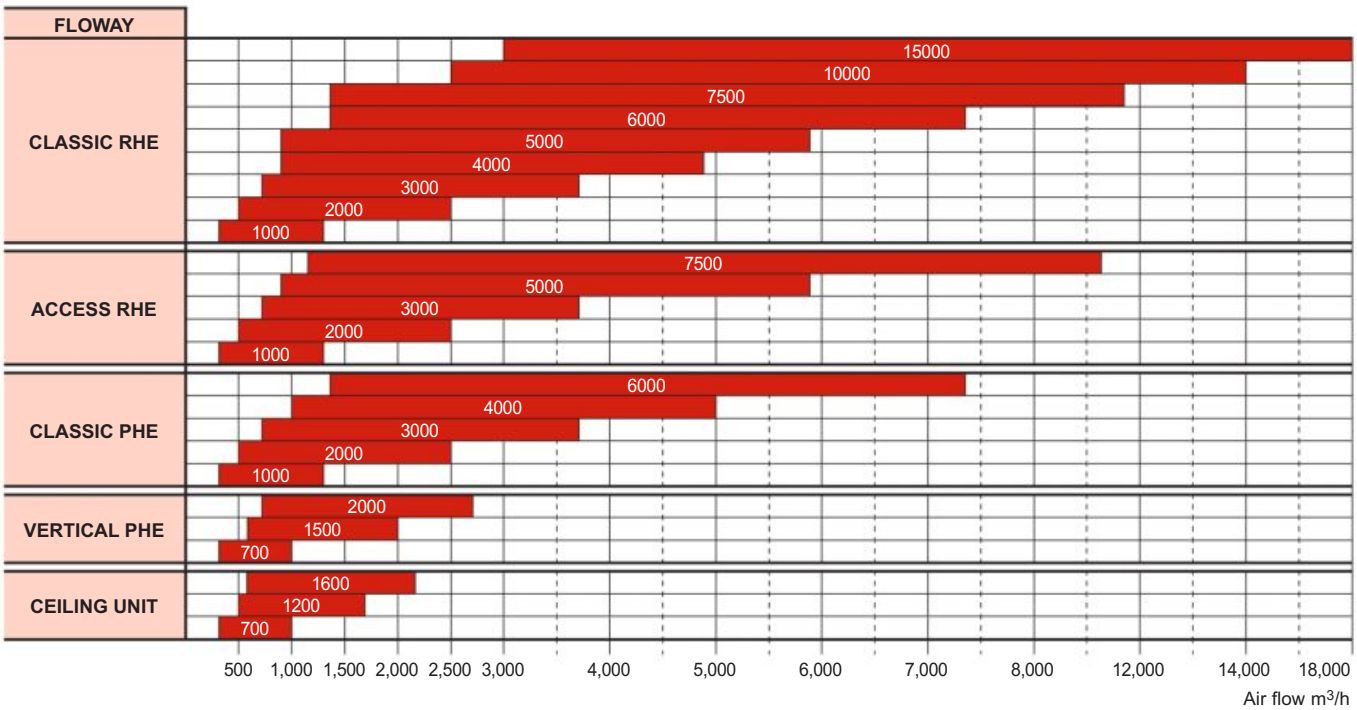

5

Description

Casing
- Double-skin panels made from steel sheet metal, galvanised on both sides, thickness 0.8 mm.
- External panels made from galvanised steel, precoated in RAL7035.
- M0/A1 insulation fire rating.
- Mineral wool, thickness 50 mm.

Filtration
- M5, F7, F9 filters.
- Filter cells kept compressed by a special system to ensure a leaktight seal.
- Classic PHE & RHE, Vertical PHE, Ceiling-mounted PHE models: fouling value monitored by analogue sensor and displayed by controller.
- Access RHE model: pressure switch control on each air flow. Pressure switch status displayed by controller.

Ventilation
- "Plug Fan" type direct-drive fan.
- Plug fan driven by an electronically commutated motor with built-in speed control.

Heat recovery units
- "Contra Flow" plate heat exchanger equipped with a motorised bypass (Ceiling-mounted PHE, Vertical PHE and Classic PHE models).
  → Efficiency greater than 80% across the range of air flows.
- Rotary heat exchanger equipped with rotation speed control (Classic RHE model).
  → Efficiency greater than 80% at nominal flow rate.
- Constant speed rotary heat exchanger (Access RHE model).
  → 80% efficiency at nominal flow rate.

Hydraulic coil
- Copper pipes, aluminium fins.
- Coil can be integrated or additional (cased).
- With the accessories fitted: 2- or 3-way control valve and 0-10 V actuator controlled by FLOWAY Control for precise setpoint maintenance.
- Stainless steel condensate drain pan (cooling coil or mixed coil only).

Electric heaters
- High-limit safety thermostats with automatic and manual reset.
- 2- or 3-stage control based on the selected option, controlled by the FLOWAY Control.

DX coil
- Copper tubes, aluminium fins.
- For reversible heating/cooling operation.
- Internal space optimised for VRV units.
- Condensate drain pan in stainless steel.

List of outdoor units optimised for Floway Access available upon request.

Electrics box
- Electrics box for power, control and regulation built into the unit, comprising as standard:
  - Power supply (3-Ph/400 V/Earth or 1-Ph/230 V/Earth).
  - Main disconnect switch.
  - Protected transformer.
  - Protection and control of all electrical components by a circuit breaker.
  - Peripheral options and power terminal block.
  - Factory-programmed PLC control.
  - Hand-held cabled micro-terminal.
  - Fault summary contact.
  - 3 temperature sensors.
  - 4 pressure sensors (2 pressure sensors and 2 pressure switches on the Access model).

Accessories
Damper formed of airfoil blades, powered by a TOR servomotor with spring return.
Flexible sleeve.
Adjustable feet.
CO_2 air quality sensor.
Roof.
Canopy.
Mixing section (Classic RHE model).

Power supply

FLOWAY CLASSIC PHE AND CLASSIC RHE			
Size	**Nominal flow rate (m³/h)**	**Rated current (A)**	**Supply type**
1000	1000	5,8	1~230 V - 50 Hz
2000	2000	4,2	3~400 V - 50 Hz
3000	3000	7,0	
4000	4000	8,6	
5000	5000	8,6	
6000	6000	10,0	
7500	7500	10,0	
10000	10000	19,0	
15000	15000	24,6	

FLOWAY ACCESS RHE			
Size	**Nominal flow rate (m³/h)**	**Rated current (A)**	**Supply type**
1000	1000	5,4	1~230 V - 50 Hz
2000	2000	2,9	3~400 V - 50 Hz
3000	3000	6,1	
5000	5000	8,8	
7500	7500	10,3	

FLOWAY VERTICAL PHE			
Size	**Nominal flow rate (m³/h)**	**Rated current (A)**	**Supply type**
700	1000	6,2	1~230 V - 50 Hz
1500	1500	4,2	3~400 V - 50 Hz
2000	2000	4,2	

CEILING-MOUNTED FLOWAY PHE			
Size	**Nominal flow rate (m³/h)**	**Rated current (A)**	**Supply type**
700	1000	6,2	1~230 V - 50 Hz
1200	1200	6,2	3~400 V - 50 Hz
1600	1600	3,6	

CONTROL SYSTEM

FLOWAY Control

FLOWAY features, as standard, an electrics box equipped with a factory-programmed PLC and a wired human machine interface.

Available control features CLASSIC PHE - CLASSIC RHE - ACCESS RHE - VERTICAL PHE models			Included	Option
Timer	Option to define up to 6 weekly programs and 6 annual programs. The programs available are: temperature and ventilation in eco/comfort mode, shut-down, night cooling and frost protection		X	
Human Machine Interface	LCD screen		X	
	Touch panel			X
	Webserver (integrated web pages)			X
	Room remote control with special interface for the end user			X
Remote actuation and CMS	Communication Protocols	MODBUS RS485 (RTU)	X	
		MODBUS IP		X
		BACnet IP		X
		KNX		X
		LON		X
Filtration	Monitoring filter fouling (via analogue sensor or pressure switch depending on the model)		X	
Ventilation management	Maintaining the air flow rate with compensation for filter fouling		X	
	Single zone	Constant air volume	X	
		Variable air volume via the CO_2 sensor		X
	Multi-zone	Constant supply air pressure (for installations equipped with ducted variable flow louvres)		X
Temperature management	Control of return air or supply air temperature		X	
	Room temperature control			X
	Automatic correction of the set-point based on the outdoor temperature		X	
	Free-cooling		X	
Direct expansion coil**	Gradual action on a reversible inverter outdoor unit			X
	Hot/cold control			X
	Optimised defrost cycle management			X
Heat recovery unit anti-icing	Via fresh air temperature control		X	
	Via Δ P control on the exhaust air			X
	Via electric pre-heater			X
Protection of the internal components	Checking the heat protection for the motors		X	
	Checking the temperature and pressure sensors		X	
	Alarm if the operating limit thresholds are exceeded		X	
Auxiliary contacts	Inputs (dry contacts)	Fire fault	X	
		Coil 1* pump fault	X	
		Coil 2* pump fault	X	
		Remote On/Off	X	
		Eco/Comfort changeover	X	
	Outputs (dry contacts)	AHU operating feedback	X	
		Maintenance fault summary*	X	
		Danger fault summary	X	
		Configurable external heater or cooler*	X	
		On/Off coil pump no. 1*	X	
		On/Off coil pump no. 2*	X	

* Not available on the Access RHE model
** Not available on the Classic PHE, Classic RHE, Vertical PHE models

AIR FLOW DIMENSIONS AND ORIENTATION

FLOWAY CLASSIC PHE, CLASSIC RHE, ACCESS RHE

SIZES	FLOWAY Classic PHE, Classic RHE, Access RHE							
	Height (C) (mm)	Width (B) (mm)	Length (A) (mm)			Weight (kg)*		
			Classic PHE	Classic RHE	Access RHE	Classic PHE	Classic RHE	Access RHE
1000	958	810	1580**	1266**	1266	200	201	180
2000	1158	1010	1150 + 800**	510 + 800**	1310	350	309	250
3000	1359	1210	1264 + 800	800 + 800	1600	465	432	330
4000	1659	1510	1264 + 800	800 + 800	-	580	558	-
5000	1659	1510	-	800 + 800	1600	-	604	445
6000	1959	1810	1407 + 800	800 + 800	-	765	702	-
7500	1959	1810	-	800 + 800	1600	-	751	580
10000	2090	1920	-	1100 + 1100	-	-	955	-
15000	2340	2192	-	1100 + 1200	-	-	1250	-

* Without internal option.
** Circular coupling; protrudes 47 mm on either side.
Condensate draining connection diameter: 16 mm smooth

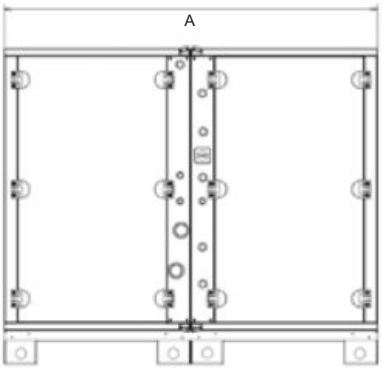

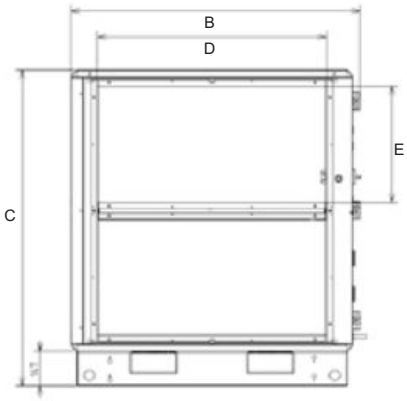

AIR FLOW ORIENTATION

Access RHE and Classic RHE models

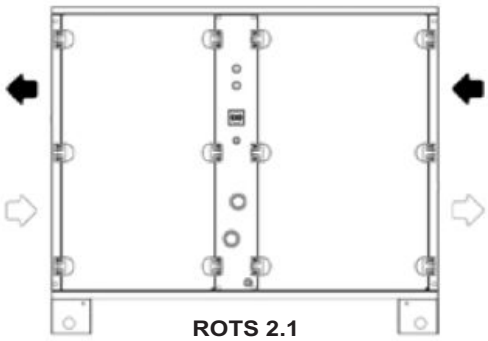

ROTS 2.1

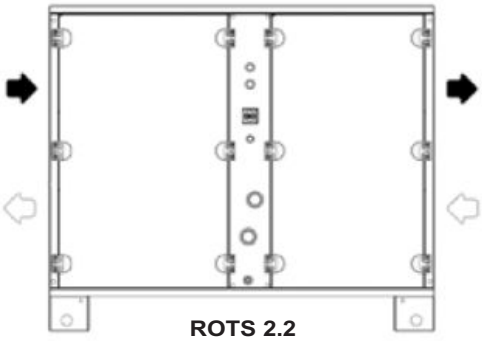

ROTS 2.2

WHITE ARROW = FRESH AIR
BLACK ARROW = EXTRACTED AIR

Classic PHE models

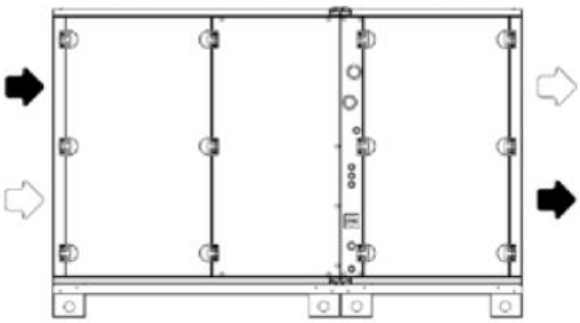

PLAS01

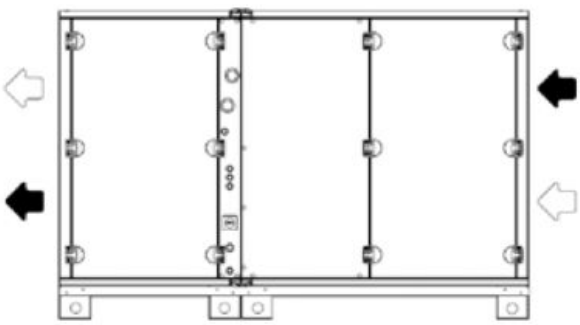

PLAS02

FLOWAY Vertical PHE

MODELS	Dimensions			Weight (kg)*
	Height	Length	Width	
700	1385	1313	730	202
1500	1758	1593	832	330
2000	1901	1735	832	389

Condensate draining connection diameter: 16 mm smooth.
* Without internal option

Size 700

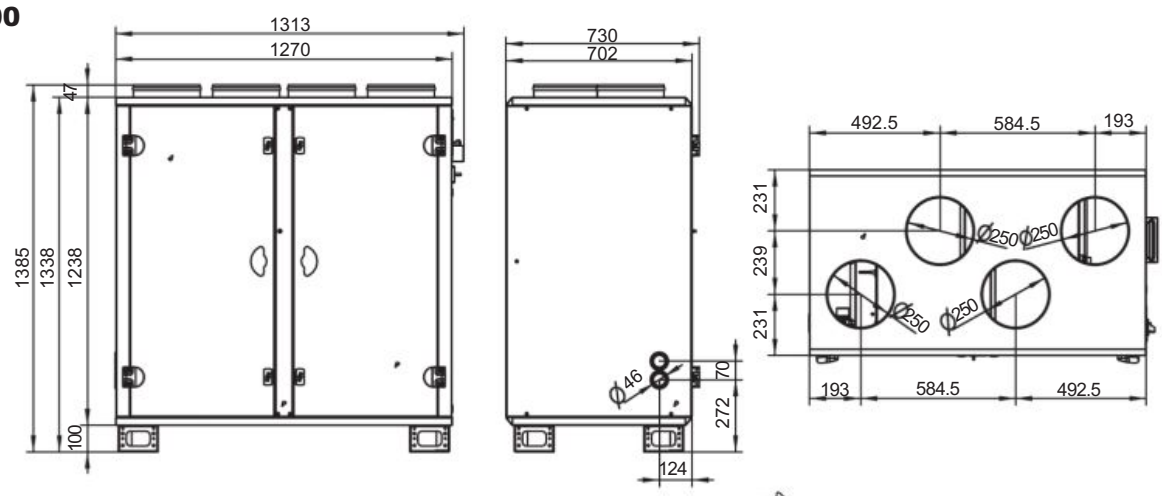

WHITE ARROW = FRESH AIR
BLACK ARROW = EXTRACTED AIR

Size 1500

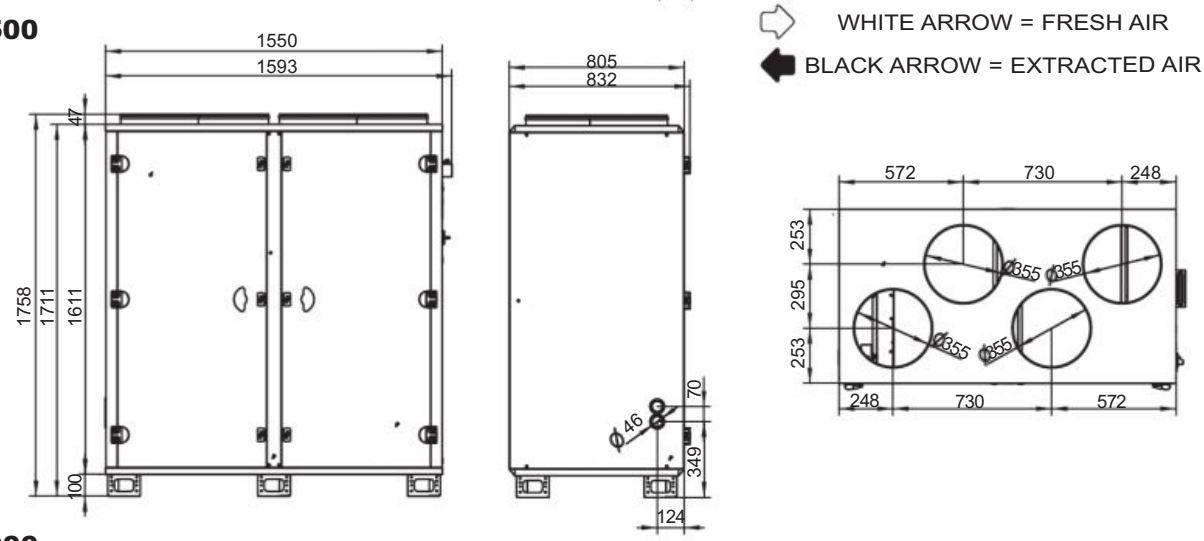

Size 2000

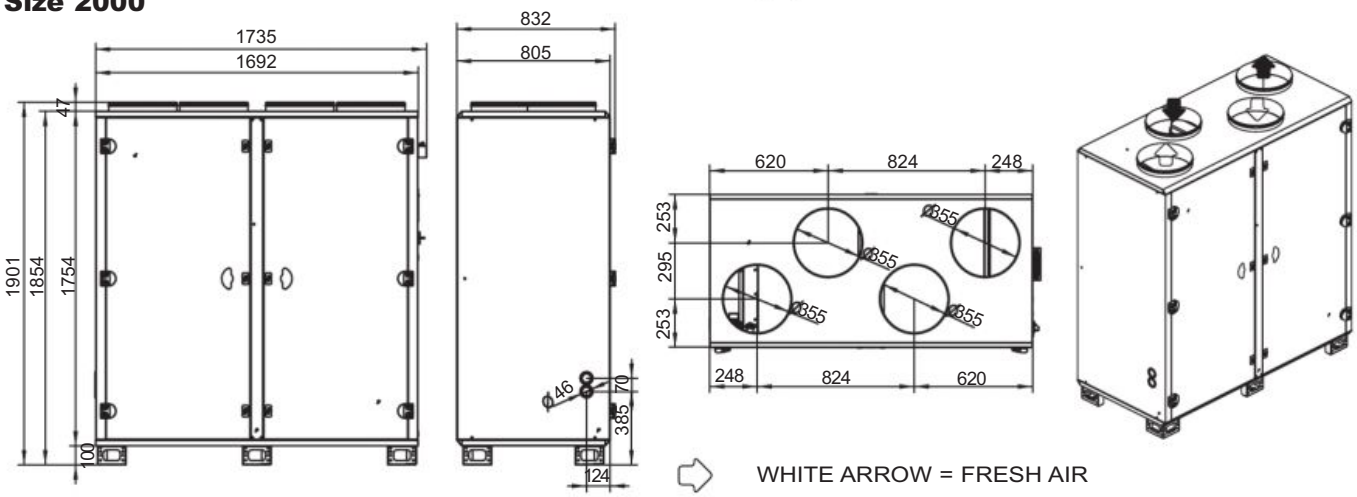

WHITE ARROW = FRESH AIR
BLACK ARROW = EXTRACTED AIR

5

Ceiling-mounted FLOWAY PHE

MODELS	Dimensions			Weight (kg)
	Height	Length	Width	
700	585	1453	896	161
1200	585	1592	1174	206
1600	585	1850	1456	279

Condensate draining connection diameter: 16 mm smooth.

Size 700

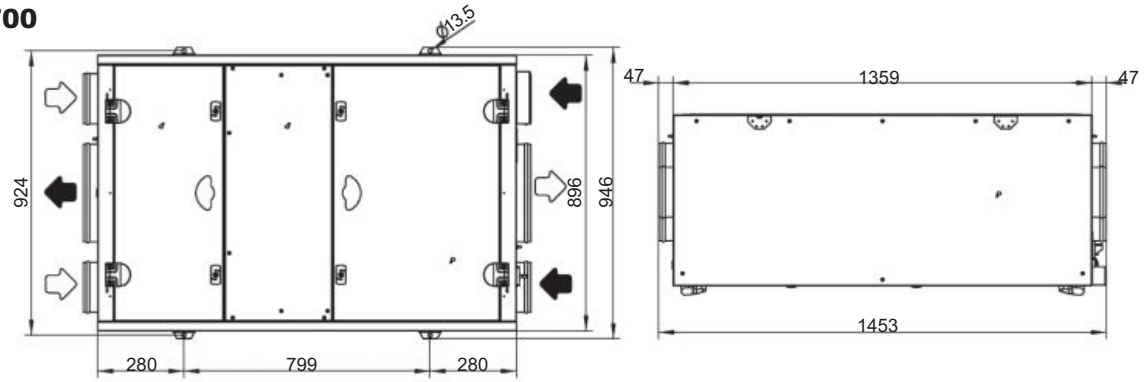

WHITE ARROW = FRESH AIR

BLACK ARROW = EXTRACTED AIR

Size 1200

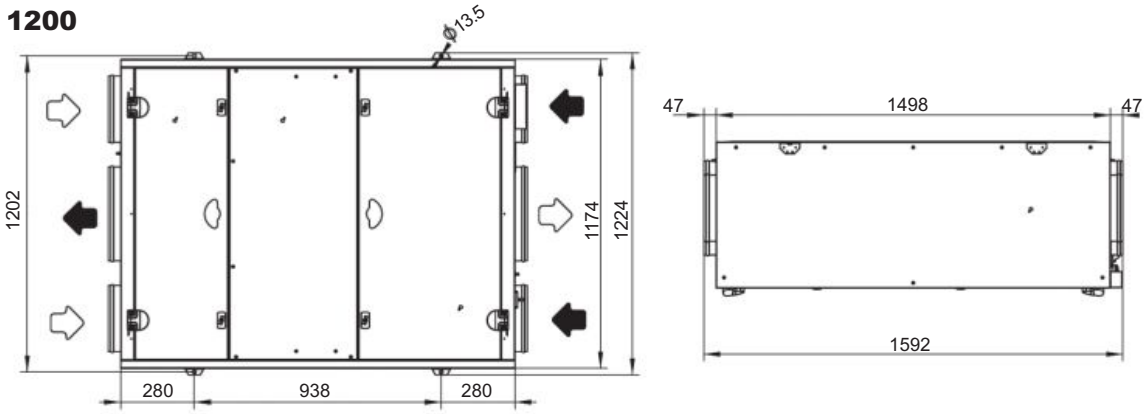

Size 1600

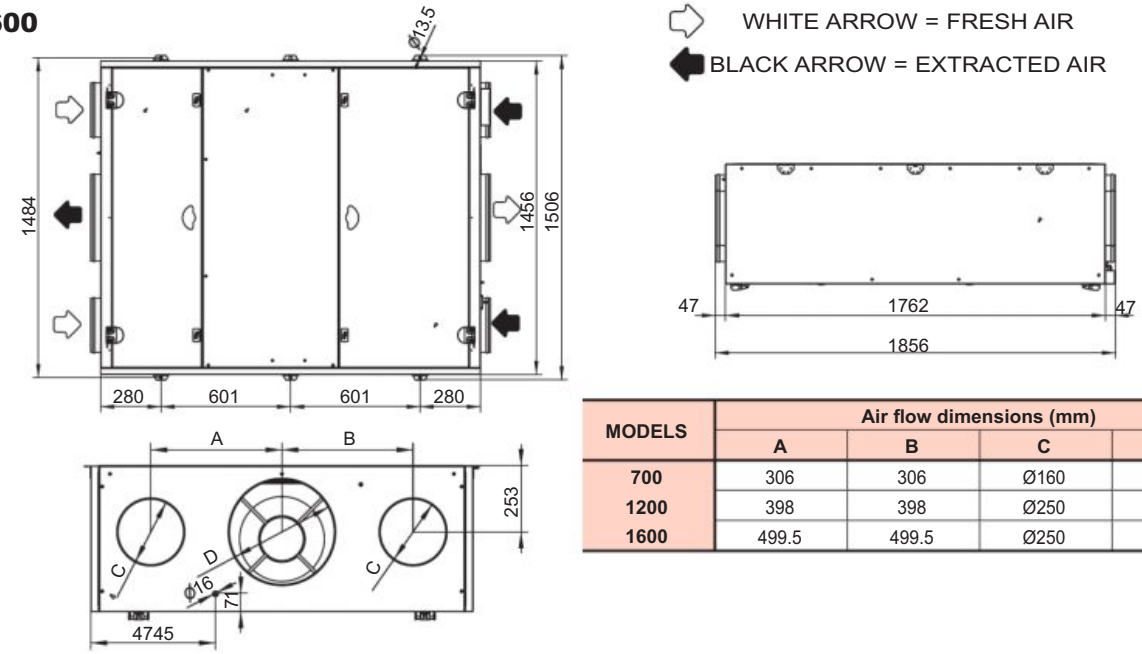

WHITE ARROW = FRESH AIR

BLACK ARROW = EXTRACTED AIR

MODELS	Air flow dimensions (mm)			
	A	B	C	D
700	306	306	Ø160	Ø315
1200	398	398	Ø250	Ø355
1600	499.5	499.5	Ø250	Ø400

Additional casing (Must only be positioned in a horizontal air flow)

Size of additional casing	Corresponding Floway model	Width (A) (mm)	Height (B) (mm)	Length (C) (mm)	Weight +/-10% (kg)
1	Classic RHE & PHE 1000 Vertical PHE 700 Ceiling-mounted PHE 700*	810	542	496	49
2	Classic RHE & PHE 2000 Vertical PHE 1500 & 2000 Ceiling-mounted PHE 1200 & 1600*	1010	642	496	62
3	Classic RHE & PHE 3000	1210	759	400	68
4	Classic RHE & PHE 4000 - 5000	1510	909	400	88
5	Classic RHE & PHE 6000 - 7500	1810	1059	400	112

* The air and circular connection is on the additional coil casing for the Ceiling-mounted PHE model (see dimensions on the selection sheet)

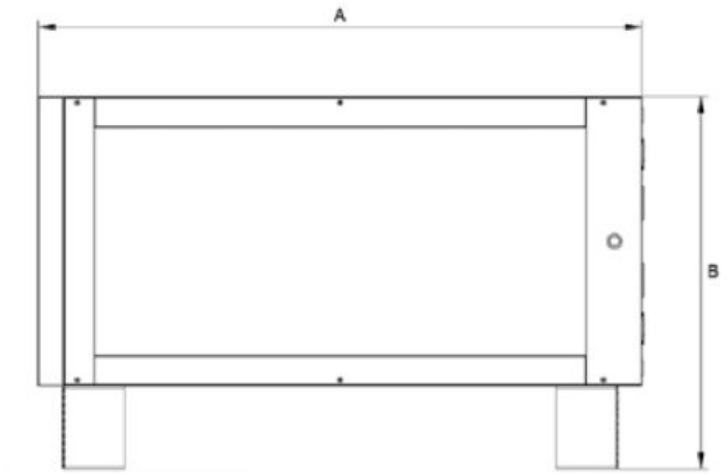

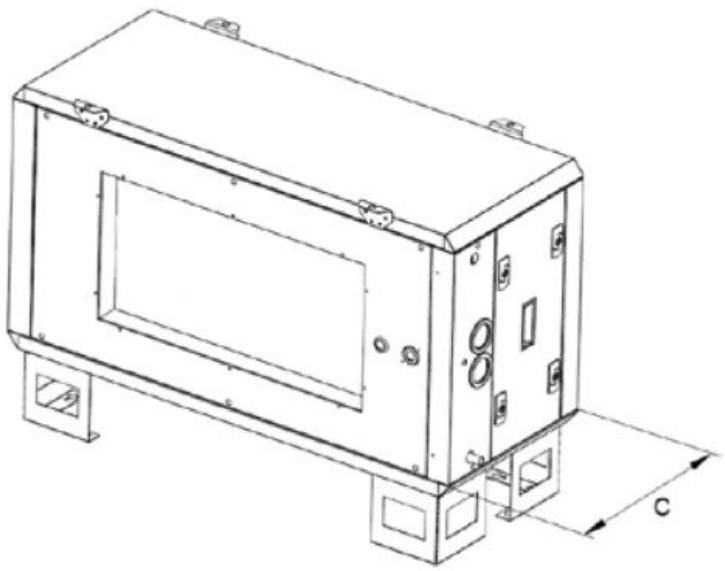

CLIMACIAT

Air handling unit

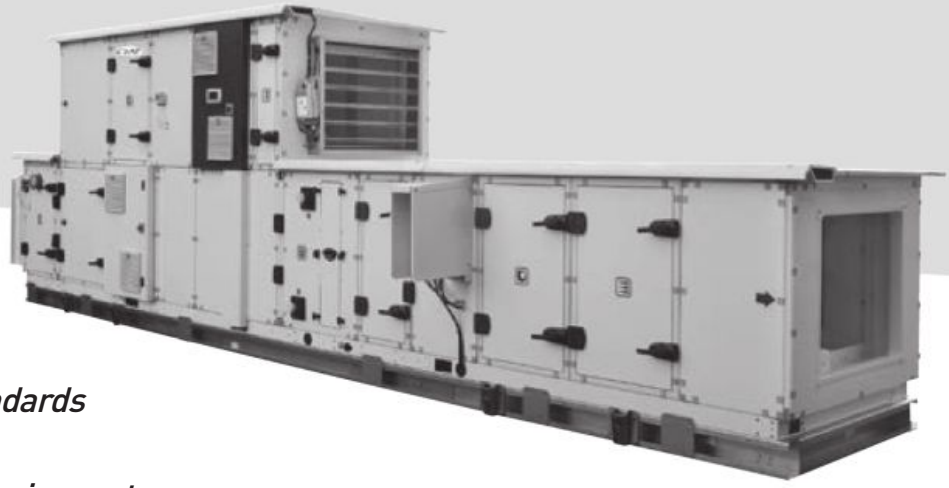

AHU for every application
Designed to conform to standards
EN 13053 and EN 1886
The effective solution for service sector, industry and healthcare applications

EUROVENT CERTIFIED PERFORMANCE
AHU N°16.04.013
Range : CLIMACIAT
www.eurovent-certification.com

CLIMACIAT airaccess | CLIMACIAT airtech | CLIMACIAT airclean

Specifications	Class	
	Climaciat Air Access	Climaciat Air Tech / Air Clean
Mechanical strength	D2	D1
Airtightness	L1	L1
Thermal transmission	T3	T2
Thermal bridge	TB3	TB1

AIR HANDLING UNIT: CLIMACIAT

CLIMACIAT represents the modern air handling units that CIAT has been offering for more than 40 years. The first air handling units were produced more than 80 years ago.
The CLIMACIAT Airaccess/Airtech/Airclean is the latest generation of AHU to be developed, and is the fruit of this experience, integrating the EN 1886 and EN13053 standards, the ERP ECODESIGN 1253-2014 regulations and current innovations (filters, heat recovery units, fans, electric motors).

CIAT is ISO 9001, ISO14001 and ISO18001 certified. This means product development meets rigorous standards and stringent environmental requirements.
Ecodesign is a very important component of the studies for the CLIMACIAT Airaccess/Airtech/Airclean range. The resulting product has a low environmental impact, in terms of its constituent materials and their recyclability and provenance, and in terms of consumption during the equipment's life cycle. All the relevant elements are listed on an environmental sheet which provides an overview of materials and consumption, and an impact study.

This latest generation has been designed according to its criteria and adapted based on the applications.

The renowned European Air Side research and test centre validated the choices using its extensive digital resources, confirmed by tests in climatic test and acoustic chambers.
It also has a huge amount of test equipment at its disposal, meaning it can perform the tests requested as part of some orders.

The entire process is automated from reception of the order to manufacture, it is unique and specifically dedicated to production of this range.

New, comprehensive industrial resources are dedicated to this production, including paint processing, machining of panelling, frame, application of gaskets, welding, tests.

CIAT also manufactures air-to-water or refrigerant fluid heat exchangers using our own calculating and sizing tools, and our own fully-integrated production lines.
This gives us complete control of our performance levels and procurement cycles.

All of the above aspects combine to allow us to create a high quality product which gives you complete satisfaction in a diverse range of applications from office and service sector administration to industrial processes and controlled environments in industry and the healthcare sector.

433

Use

The CLIMACIAT range is designed for the service sector, industry and healthcare to meet different requirements in terms of air mixing, filtration, heating, refrigeration, dehumidification, humidification, ventilation, recovery and sound attenuation. It is available as a horizontally-mounted version for installation indoors or outdoors with a roof and accessories to protect it from the weather. The range is available in a single or dual-flow version.

Thanks to the broad spectrum of solutions on offer, and the product's excellent modularity, the specifications for this product will always comply with the EN 13053 and EN 1886 standards, whatever its configuration.

CLIMACIAT Airaccess

CONCENTRATED EXPERTISE TO OBTAIN THE ESSENCE

CLIMACIAT Airtech

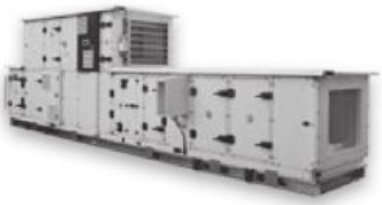

COMBINING EFFICIENCY AND MODULARITY TO MEET TECHNICAL REQUIREMENTS

CLIMACIAT Airclean

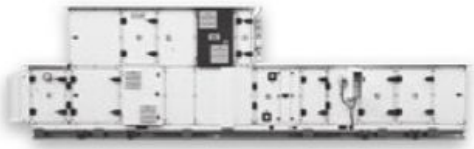

DESIGNED FOR THE SPECIFIC CHARACTERISTICS OF CONTROLLED ENVIRONMENTS

Range

The CLIMACIAT segment 1 range includes 9 different sizes to handle air flows from 1000 to 30,000 m3/h.

The diagram below is used to pre-select the required size according to:

- The through speed in the front active section of the heat exchange coils
- The air flow rate to be handled

Selection table

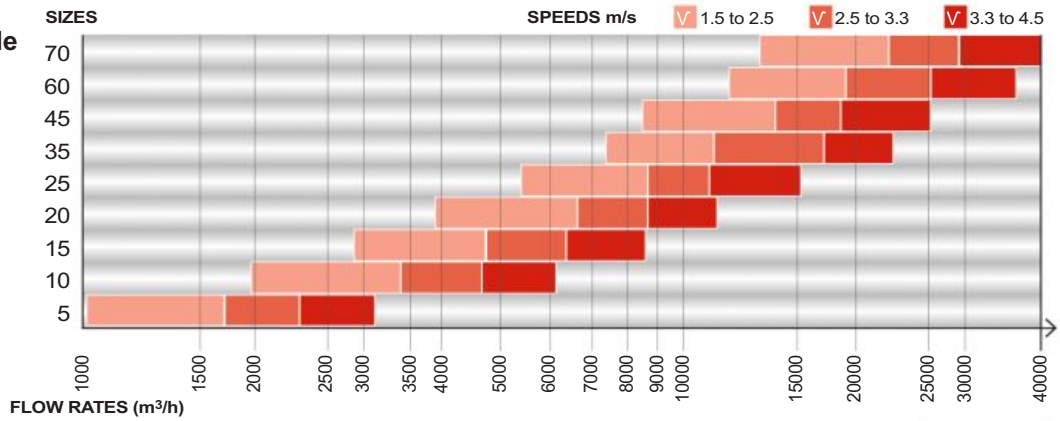

AHU sections (mm)

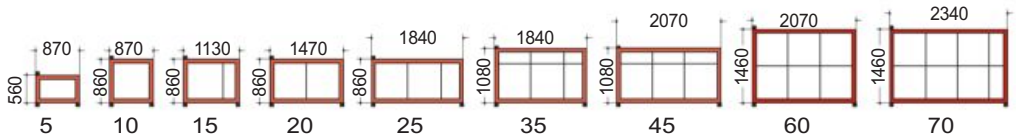

Location of components

CLIMACIAT Airtech

Actuators mounted (optional)

Class 1, 3, 4 damper and ATEX solution(optional)

Variators and electrical equipment mounted (optional)

Integrated control unit (optional)

Control sensors mounted (optional)

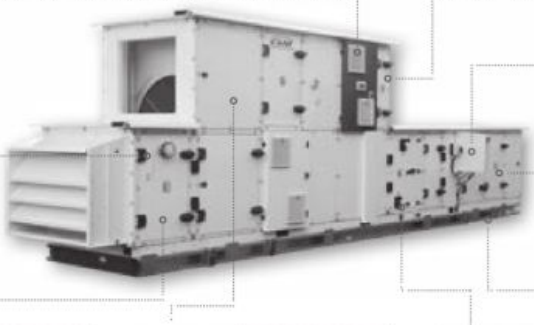

Extensive choice of fans with plug fan impeller solutions, AC/ EC motor

G1 to H14 filters with assemblies suited to various configurations

Simplified handling and positioning

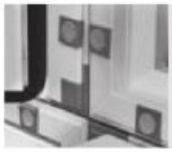
Doors on frames with thermal bridges and form-in-place gaskets for a perfect fit. Easy access for maintenance

Heat recovery for all applications and performance levels (anti-corrosion protection, enthalpy transfer, etc.)

Sealed wall cross members without thermal bridge with heat exchange coils manufactured in our factories

CLIMACIAT Airclean

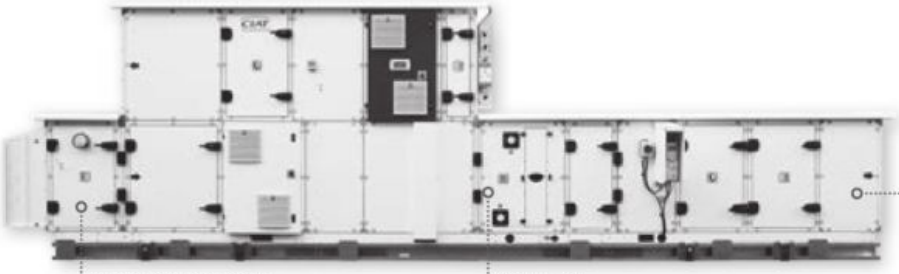

Stainless steel or painted filter mounts with universal frames, absolute frames or absolute single unit plates

High-performance casing with weak thermal bridge. Various coatings and materials possible (stainless steel, paint, etc.)

Multi-slope stainless steel condensate pan, fully accessible for decontamination purposes

Protection and paint solutions on all ventilation components

Sound attenuator with baffle protection by means of an anti-defibration fabric (stainless steel or paint optional)

CLIMACIAT Airaccess

Filtration from G1 to H13

Functional and high-performance casing with doors with form-in-place gaskets

Rotary heat recovery units or plate heat exchangers with options

High-performance AC/EC fans

Various types of droplet separators (aluminium, stainless steel, polypropylene) on runners for sideways removal

5

General description of the climaciat ranges

Casing

- Self-supporting panel construction up to size 70
- Double-skin panels, with 50 mm thick, long-fibre mineral wool insulation, reinforced with a non-woven fibreglass fabric, welded on for greater vertical strength.
- Moulded high strength bi-component polyurethane gaskets for the casing and door, guaranteeing a perfect seal.
- Inside of the AHU is perfectly smooth and even, with no protruding screws, as per the specifications in European standard EN 13053 (no internal handles).
- Doors hung on high quality frames, guaranteeing durability, performance and easy access for maintenance with adjustable hinges, external twist-lock handles and decompression system.
- AHUs delivered in several units are equipped with specific factory-fitted connective pieces, which ensure perfect alignment to simplify assembly.
- Each component unit of the AHU is equipped with an 80 mm ground insulation frame and multifunction ergonomic supports (handling, assembly).
- Each component is fitted with its own service panels. This allows independent removal for each function.

CLIMACIAT Airtech

- Highly-insulated panels, with thermal bridge break profiles
- External walls made from sheet metal with RAL9001 lacquer coating
- Internal wall in Z275 galvanised steel

CLIMACIAT Airclean

- Highly-insulated panels, with thermal bridge break profiles
- External wall made from galvanised steel with RAL 9010 lacquer coating
- Internal wall made from galvanised steel with RAL 9010 lacquer coating

CLIMACIAT Airaccess

- Conventional double-wall panels
- External wall in Z275 galvanised sheet steel
- Internal wall in Z275 galvanised steel

OPTIONS AVAILABLE PER RANGE	Airaccess	Airtech	Airclean
Textured RAL 9001 paintwork on external panels	X	Standard	NA
Textured RAL 9001 paintwork on internal panels	X	X	NA
Smooth RAL 9010 paintwork on external panels	NA	X	Standard
Smooth RAL 9010 paintwork on internal panels	NA	X	Standard
Internal and/or external panels in 304 L or Z3CN 18.10 stainless steel	NA	X	X
Internal and/or external panels in 316 L or Z3CND 17.11.02 stainless steel	NA	X	X
Stainless steel indoor baseframe	X	X	X
Sloped stainless steel indoor baseframe with drainage	NA	X	X
Galvanised ground insulation frame (h = 80mm)	Standard	Standard	Standard
Painted frame	NA	X	X
Stainless steel frame	NA	X	X
Factory-assembled AHU on common rack: max size 45 or maximum length 6 m	X	X	X
Container kit	X	X	X
Adjustable support feet with 60 mm extension	X	X	X
Fixed extension feet from 200 to 400 mm	X	X	X
Sloped roof for outdoor mounting	X	X	X
Louvres with grilles to match external casing finish	X	X	X
Protective cover for external components to match external casing finish	X	X	X
Factory-fitted cable raceway	X	X	X
Lateral technical unit	X	X	X

X: Option NA: Not applicable

Mixing and air intakes

The air intakes and mixing section may be installed at the intake, inserted between the functions or installed at the device outlet.

These functions are equipped with dampers formed of counter-rotating profiled blades, with lateral gaskets, and driven by conrods.

These dampers are installed outside of or inside the casing, depending on the solution chosen.

Independent control of the louvres: manual, motorised or ready to be motorised

The functions provided depend on the selection:

- Isolation damper
- Frost protection damper
- Safety damper
- 2-way mixing with air intake
- 2-way flow distributions: top, front or lateral
- 3-way mixing: aligned, stacked or juxtaposed

Depending on the finishes:

- CLIMACIAT Airaccess
  - Class 1 galvanised steel blades and frame compliant with EN1751
- CLIMACIAT Airtech / Airclean
  - Class 3 galvanised steel blades and frame compliant with EN1751

OPTIONS AVAILABLE PER RANGE	Airaccess	Airtech	Airclean
Servomotor operated damper	X	X	X
Manual operated damper	X	X	X
Class 3 damper with defrosting system	X	X	X
Class 4 airtightness damper compliant with EN 1751	NA	X	X
Polyester coated face and bypass dampers (frame and blades)	X	X	X
Stainless steel 304L damper	NA	X	X
ATEX damper	NA	X	X
Stainless steel drain pan	X	X	X
Hinged access door	X*	X*	X*
Lift-off door	X*	X*	X*
Porthole on door	X*	X*	X*
230V bulkhead light	X*	X*	X*
Door contact switch	X*	X*	X*

* Availability depends on the configuration
X: Option NA: Not applicable

Filters

To meet the requirements of all the applications, a very wide range of filter efficiencies, technologies and dimensions is available.

Across the entire range, and for each type of filter, cells with international dimensions of 24'' x 24'' and 12'' x 24'' are available.

On sizes 05 to 45, compact filters which are 50mm thick are available in full section (FS) to optimise energy consumption.

Different types of filter assembly are available, depending on the efficiency level, technology and location within the AHU.

There are 6 specific assembly systems:

Assembly A available for filters with international dimensions and **Assembly A FS** for filters with a full section

- Traditional tracks designed for efficiency levels Coarse to 50% ePM10 or G1 to M6: For Compact cells, 50 mm thick, side door

Assembly B available for filters with international dimensions and **Assembly B FS** for filters with a full section

- Compressible tracks designed for efficiency levels G4 to F9 or Activated Carbon (urban pollution) for Compact cells and flexible or rigid bag with side door.

Assembly C for filters with international dimensions:

- Universal frames designed for efficiency levels Coarse or 80% ePM1 or G4 to F9, E10 or Activated Carbon (urban pollution) for Compact cells and flexible or rigid bag with access section and side door

Assembly D for Absolute filters with international dimensions

- Absolute large-media frames for EPA and HEPA Absolute cubic cells

Assembly ED for Absolute filters with international dimensions

- Absolute plate for EPA and HEPA Absolute cubic cells for industrial applications (e.g. pharmaceuticals).

Assembly F for Cubic carbon filters with international dimensions

- Large-media frames for Activated Carbon cubic cells.

Description	Construction Code	Assembly	Efficiency levels ISO16890; EN779-2012; EN1822	Cell descriptive code
50 mm flat metal filter	C	A or C	Coarse 30% - G1	Galvanised steel metal medium and frame
50 mm flat filter	C	A, B or C	Coarse 60% - G4	Galvanised steel metal frame and synthetic medium
			ePM10 50% - M5	
			M6	
			ePM1 60% - F7	
50 mm flat filter (full section) up to size 45	C FS	A FS or B FS	Coarse 60% - G4	Galvanised steel metal frame and synthetic medium
			ePM10 50% - M5	
			M6	
			ePM1 60% - F7	
292 mm rigid bag filter	RB	B or C	ePM10 70% - M6	Polypropylene frame and fibreglass medium
			ePM1 60% - F7	
			ePM1 70% - F8	
			ePM1 85% - F9	
			E10	
380 mm short flexible bag filter	SB	B or C	Coarse 60% - G4	Galvanised steel metal frame and synthetic medium
			ePM10 60% - M5	
			ePM10 65% - M6	
			ePM1 60% - F7	
600 mm long flexible bag filter	LB	B or C	ePM10 65% - M6	Galvanised steel metal frame and synthetic medium
			ePM1 60% - F7	
			ePM1 85% - F9	
292 mm Absolute filter	CUBIC 610x610	D	E10	Polypropylene frame and fibreglass medium
			H13	
			H14	
292 mm rigid bag carbon filter + fine filter, std universal frame	RB	B or C	Carbon +ePM1 60% - F7	Polypropylene frame, synthetic + carbon medium
Flexible carbon bag filter + 600 mm long bag fine filter	LB	B or C	Carbon +ePM1 70% - F7	ABS frame, synthetic + carbon medium
292 mm rigid bag carbon filter	RB	B or C	Carbon	Carbon polypropylene frame
Cubic carbon filter	CUBIC 595x595	F	Carbon	Metal frame + carbon panel

C: 50 mm compact filter
C FS: 50 mm compact filter, full section
RB: 290 mm rigid bag filter
SB: 380 mm short flexible bag filter
LB: 600 mm long flexible bag filter
CUBIC: 292 mm cubic

438

OPTIONS AVAILABLE PER RANGE	Airaccess	Airtech	Airclean
Lift-off door	X	X	X
Filter pressure tapping	Standard	Standard	Standard
Additional filter set	X	X	X
Galvanized steel driptray	X	X	X
Stainless steel drip tray	X	X	X
Liquid manometer (supplied loose item)	X	X	X
Differential pressure switch	X	X	X
Magnehelic pressure gauge (supplied loose item)	X	X	X
Magnehelic pressure gauge factory fitted	X	X	X
Double glass porthole	X	X	X
230V bulkhead light (supplied loose item)	X	X	X
230V bulkhead light fitted and wired to external switch	X	X	X
Door contact switch	X	X	X
Painted filter slide rails	X	X	Standard
Painted filter frame	X	X	Standard
304 L or 316 L stainless steel slide rails	X	X	X
Stainless steel frontal access filter frame (fine filters •F")	NA	X	X
Painted filter frame (EPA/HEPA filters)	X	X	Standard
Stainless steel filter frame (HEPA filters •H")	NA	X	X
ATEX filters	NA	X	X

X: Option NA: Not applicable

Plate heat exchanger

- 3 efficiency levels available: from 60% to 85%
- The plate heat exchangers are always equipped with a total bypass on fresh air and access hatch to the servomotor
- Condensate drain pan on exhaust air side, made from galvanised steel with condensate drain piping as standard
- Available in a stacked configuration for all sizes
- Available in a juxtaposed configuration for size 60 and 70
- Access door to the condensate drain pan(s)

In the standard construction, the heat exchanger has aluminium plates, and can be used routinely up to an air temperature of 90°C (if the plate heat exchanger is a component of an AHU, the standard limit temperature is 80°C). The leakage flow rate is 0.1%, the nominal flow rate for a pressure difference of 400 Pa between the 2 air streams.

OPTIONS AVAILABLE PER RANGE	Airaccess	Airtech	Airclean
Pre-painted aluminium plates	X	X	X
Condensate drain pan (exhaust air side) stainless steel	X	X	X
Condensate drain pan (fresh air side) stainless steel	X	X	X
Paint on baffle, partition and support	X	X	X
Plate exchangers components made of 304 L or 316 L stainless steel	NA	X	X
Painted bypass damper	X	X	X
Stainless steel bypass damper	NA	X	X
Motorized / manual operated damper	X	X	X
Pressure tappings in intake and exhaust	Standard	Standard	Standard
Additional access door	X	X	X
Door porthole	X	X	X

X: Option NA: Not applicable

439

Rotary heat exchanger

- Several efficiency levels available: from 75% to 85%
- Corrugated aluminium fins
- Adjustable peripheral gasket to guarantee a minimum leak flow rate
- Lateral inspection panel
- Constant speed gear motor (230 / 400 V three-phase power supply)
- Maintenance-free ball bearing

OPTIONS AVAILABLE PER RANGE	Airaccess	Airtech	Airclean
Gear motor and variable frequency drive for variable speeds from 0 to 10 rpm – 230 V single-phase	X	X	X
Coated aluminium heat recovery wheel	X	X	X
Hygroscopic heat recovery wheel (for humidity exchange)	X	X	X
Enthalpic heat recovery wheel (for total power exchange)	X	X	X
Standard condensates drain pan	NA	X	X
316 stainless steel drain pan	NA	X	X
Indoor panels polyester coated	X	X	X
Indoor panels in 304 L or 316 L stainless steel	NA	X	X
Pressure tappings	Standard	Standard	Standard
Purge sector	X	X	X
Door porthole	X	X	X

X: Option NA: Not applicable

Heating coil

Fluids:

- Hot water

- Construction with copper tubes and aluminium fins.
- Maximum primary fluid temperature = 120°C.
- Operating pressure for water: 16 bar as standard - Higher pressures on consultation.
- Removable sealing collars between the casing and manifolds (up to a diameter of 3" to prevent damage to the sealing system when connecting up).

Depending on the type of coil and the diameters required, the manifolds and supply tubes are:

- Copper tubes with unions up to a diam. of 2"1/2.
- Grooved steel tubes for larger diameters.

- Superheated water

- Construction with steel tubes and aluminium fins.
- Maximum primary fluid temperature = 200°C.
- Operating pressure for water: max 30 bars.
- Manifolds and supply tubes are steel tubes with smooth ends.

- Condensation refrigerant

- Construction with copper tubes and aluminium fins.
- Supply tubes are copper tubes with smooth ends.

- Steam

- Max pressure 2 to 8 bars - stainless steel tubes, aluminium fins.
- Manifolds and supply tubes are stainless steel tubes with smooth ends.

OPTIONS AVAILABLE PER RANGE	Airaccess	Airtech	Airclean
Superheated water coil	X	X	X
Steam coil	X	X	X
Condensation coil	X	X	X
Pressure tapping, upstream and downstream	X	X	X
Precoated fins/ max. primary fluid temperature 110°C	X	X	X
Stainless steel water coil	NA	X	X
ALTENA treatment, max. temperature 160°C	X	X	X
BLYGOLD treatment, max. temperature 90°C	X	X	X
HERESITE treatment, max. temperature 180°C	X	X	X
Copper fins coil	X	X	X
304 L or 316 L stainless steel tracks	X	X	X
304 L or 316 L stainless steel slide rails	X	X	X
Standard screw flanges	X	X	X
Stainless steel screw flanges	X	X	X
Quick connections kit (copper tubes) (victaulic type)	X	X	X
Threaded connections (steel tubes)	X	X	X
Frost protection thermostat (manual reset)	X	X	X
Frost protection thermostat with automatic reset (supplied loose item)	X	X	X
Frost protection thermostat with automatic reset (factory fitted)	X	X	X

X: Option NA: Not applicable

Electric heater

- Shielded resistors in stainless steel scrolled finned tubes - Connection to copper jumper strips.
- Assembly with double insulation.
- The electric heater is equipped with two safety thermostats. The first has a manual reset, the second has an automatic reset.
- To set up the coil, refer to the instructions sent with each unit.
- Take the necessary measures to prevent abnormal overheating when the fan is switched off (fan delay).

OPTIONS AVAILABLE PER RANGE	Airaccess	Airtech	Airclean
Painted slide rails	X	X	X
304 L or 316 L stainless steel slide rails	X	X	X
304 L or 316 L stainless steel coil casing	X	X	X
Single- or three-phase connection	X	X	X

X: Option NA: Not applicable

Refrigeration coil

Fluids:

- Chilled water

- Construction with copper tubes and aluminium fins.
- Operating pressure for water: 16 bar as standard - Higher pressures on consultation.
- Sloped condensate drain pan with drain tubes to be connected on site to a siphon (compulsory requirement).
- Droplet separator as standard if necessary, as an option on request.
- Removable sealing flanges between the casing and manifolds up to 3" in diameter, preventing damage to the sealing system during connection operations.

Depending on the type of coil and the diameters required, the manifolds and supply tubes are

- Copper tubes with unions up to a diam. of 2"1/2.
- Grooved steel tubes for larger diameters.

- Direct expansion evaporation

- Construction with copper tubes and aluminium fins.
- Sloped condensate drain pan with drain tubes to be connected to a siphon on site (compulsory requirement).
- Droplet separator as standard if necessary, as an option on request.
- Standard smooth copper refrigerant supply tubes (supplied capped)
- Manifold on fluid intake as standard.

OPTIONS AVAILABLE PER RANGE	Airaccess	Airtech	Airclean
Chilled water coil	X	X	X
Direct expansion evaporation coil	X	X	X
Access panel on droplet separator		as standard if compulsory	
Precoated fins/ max. primary fluid temperature 110°C	X	X	X
Stainless steel tubes coil	NA	X	X
Copper fins coil	X	X	X
ALTENA treatment, max. temperature 160°C	X	X	X
BLYGOLD treatment, max. temperature 90°C	X	X	X
HERESITE treatment, max. temperature 180°C	X	X	X
Painted slide rails	X	X	X
Stainless steel slide rails	X	X	X
304 L or 316 L stainless steel coil casing	X	X	X
316 L stainless steel condensate drain pan	X	X	X
316L stainless steel hygienic drain pan	NA	X	X
Insulated drain pan (cell foam)	X	X	X
Headers/elbows insulation	X	X	X
All stainless steel droplet separator (frame and medium)	X	X	X
Polypropylene blade droplet separator, galvanised frame	X	X	X
Polypropylene blade droplet separator, stainless steel frame	X	X	X
Aluminium blade droplet separator, galvanised frame	X	X	X
Aluminium blade droplet separator, stainless steel frame	X	X	X
Pressure tapping, upstream and downstream	X	X	X
Standard screw flanges	X	X	X
Stainless steel screw flanges	X	X	X
Tubes with quick connections (copper tubes) (victaulic type)	X	X	X
Threaded connections (steel tubes)	X	X	X
Frost protection sensor support	X	X	X

X: Option NA: Not applicable

Fans

- Forward-curved dual-inlet fan.
- Backward-curved dual-inlet fan.
  Steel scroll and impeller.
  Belt and pulley transmission on the dual-inlet fans.
  Assembly on anti-vibration frame with flexible internal sleeve and damper mounts.
- Metal impeller plug fan with AC motor
  Assembly on anti-vibration frame with flexible internal sleeve and damper mounts.
- Standard motor: asynchronous three-phase, 230 / 400 V 50 Hz up to 3 kW - 400 V - 50 Hz from 4 kW, IP 55 protection, class F with PTC
- Steel plug fan with EC motor with integrated fan
  Assembly on partition.
- Inspection hatch with bolts in compliance with the "MECHANICAL SAFETY" specification in the EN 1886 standard and the machinery directive.

OPTIONS AVAILABLE PER RANGE	Airaccess	Airtech	Airclean
Fan with forward-curved blades and transmission	X	X	X
Fan with backward-curved blades and transmission	X	X	X
Plug fan	X	X	X
EC plug fan	X	X	X
ATEX fan	NA	X	X
Flush mounted panel	X	X	X
Hinged door	Standard	Standard	Standard
Pressure tappings	X	X	X
Door contact switch	X	X	X
Double glass porthole	X	X	X
Smoke detector (NF S61961)	X	X	X
230V Bulkhead light (supplied loose item)	X	X	X
230V Bulkhead light fitted and wired to an external switch	X	X	X
Anticorrosion painting for wheel and motor assembly (centrifugal and AC plug fan motor)	X	X	X
Stainless steel wheel and motor assembly (centrifugal and AC motor plug fan)	NA	X	X
Anticorrosion painting for EC fan wheel	NA	X	X
Protection grill for centrifugal fan	X	X	X
Screened door protection	X	X	X
Belt housing	X	X	X
2 motors set in parallel	X	X	X
Motor support on rails	X	X	X
Variable frequency drive (supplied loose item)	X	X	X
Variable frequency drive factory fitted	X	X	X
Door switch factory fitted	X	X	X
Door switch (supplied loose item)	X	X	X
Fan anti recirculation damper	X	X	X

X: Option NA: Not applicable

Sound attenuator

- Different lengths of baffle depending on the required attenuation.
- Mineral wool of different densities, the faces are covered with an anti-erosion shield.
- Galvanised panelling.

OPTIONS AVAILABLE PER RANGE	Airaccess	Airtech	Airclean
Baffle lengths (in mm)	600 - 900 - 1200 - 1500		
Anti schredding glass cloth	NA	X	X
Polyester coated slide rails	X	X	X
Epoxy painted sheet metal baffles	X	X	X
304 L or 316 L stainless steel rails	NA	X	X
Ground wire for ATEX applications	NA	X	X

X: Option NA: Not applicable

Standalone production steam humidifier

With steam production (standalone with electrodes)

The supply includes:

- Aluminium steam distributor.
- Steamer with electrical cabinet and controller (IP 33).
- Proportional or On/Off control.
- Duct/cylinder connection.
- Condensate return tubes and connections.
- 230 V single-phase or 400 V three-phase supply voltage - 415 V according to capacity
- Min and max supply water conductivity limits 125 - 1250 microsiemens /cm (8000 - 800 ohm).
- Hardness of supply water 15 - 30 degrees (French).

OPTIONS AVAILABLE PER RANGE	Airaccess	Airtech	Airclean
Stainless steel driptray	X	X	X
Galvanised droplet separator	X	X	X
Stainless steel droplet separator	X	X	X
Double glass porthole	X	X	X
230V Bulkhead light factory fitted and wired to an external switch	X	X	X
Flush mounted panel	X	X	X
Door contact switch	X	X	X

X: Option NA: Not applicable

With steam production (standalone with heaters) on consultation

Control

Integrated electric board inside the unit ,fully wired and factory tested.

Fully wired unit , control fitted , wired and factory tested if unit supplied in one one or several blocks mounted in a common rack.

Plug & Play solution: 400 V + earth power supply

The control software for the CLIMACIAT range enables the following functions :

- Temperature regulation*: sensor on supply air/return air/ room air
- Humidification and dehumidification regulation*: sensor on return or room air
- Fan management: constant flow/constant pressure
- Filter fouling management (4-stage filtration as maximum)
- Single-zone air quality management (CO_2) sensor on return air or room air
- Coil : cooling/heating/mixed/direct expansion (2/3 way water valves as option)
- Electric heater (4-stage heaters as maximum)
  - Proportional and On/Off control
  - 1 TRIAC type proportional stage (compulsory)
  - Independent power supply, control by the AHU PLC.
- Steam humidifier with electrode:
  - Independent power supply, control by the AHU PLC.
- Management of cooling modes: Free cooling / Night cooling
- Management of frost protection system
- Fire protection function
- Communication protocols available:
  - Modbus RTU RS485 / Modbus TCP IP / KNX / LON / BACNET IP

Following options can be controlled independently /externally :

- Steam coil/Superheated water coil/Glycol/water mix coils/ Condensation coil
- Gas burner
- Adiabatic humidifier

*availability depends on the type of options selected; see specific control document

Extra accessories:

OPTIONS AVAILABLE PER RANGE	Airaccess	Airtech	Airclean
Flexible sleeves	X	X	X
Rain protection hood (supplied with grill)	X	X	X
Additional protection grill	X	X	X
Factory-assembled AHU on Common rack : max size 45 or maximum length 6 m	X	X	X

X: Option NA: Not applicable

DIMENSIONS

External dimensions and raceway details*

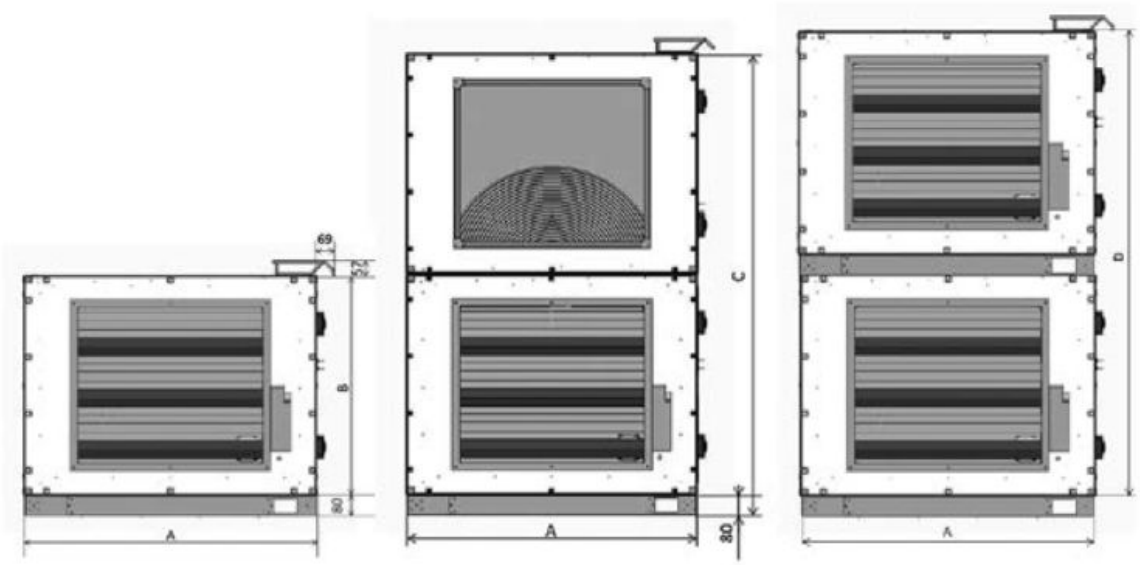

Sizes	Casing external dimension				Length of the sections**
	A	B	C	D	
5	870	560	1122		250 < L < 2800
10	870	860	1722		250 < L < 2800
15	1130	860	1722		250 < L < 2800
20	1470	860	1722		250 < L < 2800
25	1840	860	1722		250 < L < 2800
35	1840	1080	2162		250 < L < 2800
45	2070	1080	2162		250 < L < 2800
60	2070	1460		3000	250 < L < 2800
70	2340	1460		3000	250 < L < 2300

* Optional raceway with height of 70 mm and width of 57 mm
** Length excluding the 23 mm unit end panel at each end

Connection flanges

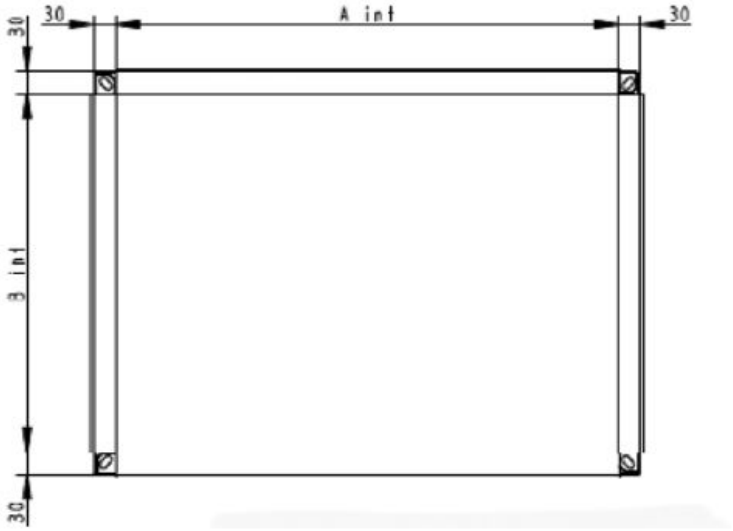

Reference 00: Lateral air intake
Reference 1: Air intake, small section
Reference 2: Air intake, large section
Reference 3: Scroll fan discharge air intake

CLIMACIAT UNIT	Airaccess / Airtech / Airclean	5	10	15	20	25	35	45	60	70
Reference 00 - LATERAL	A	320	320	470	620	720	770	970	870	970
	B	370	670	670	670	670	870	870	1270	1270
Reference 1 - SMALL SECTION	A	515	515	775	1115	1485	1485	1715	1715	1985
	B	220	370	370	370	370	470	470	670	670
Reference 2 - LARGE SECTION	A	515	515	775	1115	1485	1485	1715	1715	1985
	B	370	670	670	670	670	870	870	1270	1270
Reference 3: FAN DISCHARGE	A		520	520	520	520	620	620	920	920
	B		520	520	520	520	620	620	920	920

AIRTECH

Air handling units

AIRTECH

The technological choice

Air flow rate: *1000 to 66,000 m³/h*

Specifications	Class	
	Size 25 to 75	Size 100 to 600
Mechanical strength	D1	D2
Airtightness	L1	L1
Filter bypass leak	F9	F9
Thermal transmission	T2	T2
Thermal bridge	TB2	TB2

Air handling for all applications

Thanks to its large range of air flows and comprehensive selection of air handling features, **AIRTECH** efficiently responds to all requirements in industrial and service sector applications.

The specifications for this product will always fulfil requirements thanks to the broad spectrum of solutions on offer, the product's excellent modularity, and the multiple installation options (horizontal, vertical, stacked, juxtaposed, indoor or outdoor).

High performance in line with new standards

AIRTECH air handling units have been designed in accordance with the recommendations of standard EN 13053 and to meet the best classifications of standard EN 1886: Thermal transmission and bridging, casing airtightness, filter bypass leakage, complying with the requirements for fans concerning mechanical safety.

All components and accessories (handles, closing latches, wall feedthroughs, portholes, sealing gaskets) have been developed by CIAT to achieve exceptional performance, thanks to its special benchmark design.

LATEST-GENERATION DESIGN

Casing

❶ Double-skin panels, painted external panel, 50-mm insulation

❷ At least one removable panel for each function in accordance with EN 13053

❸ Smooth panels devoid of protruding internal screws in accordance with EN 13053

❹ Access panels as standard on functions requiring maintenance

❺ Offset hinges and handles with closing latches, in composite material: Resistance to corrosion and temperatures from -40 °C to +80 °C

❻ Multifunction ergonomic support which enables and is suitable for handling, installation, block connection, panel ventilation, a control system

❼ High-tech profiled door seal in a special material. The high-quality fixed panels feature a gasket which contributes to the casing airtightness classification in accordance with EN 1886

❽ Large-section square porthole in accordance with EN 13053, dual-wall construction with increased leaktightness thanks to the internal connection bellows.

Air intake

❾ Damper with opposed blades, driven by toothed wheels, "Class 3" tightness according to EN 1751

❺ Composite hinge

❺ Opening handle

⓭ Condensate pan

⓮ Sealing flanges

⓲ Adjustable motor support bracket

Filters

⑩ Parallel clamping filter tracks. Class F9 in accordance with EN 1886

⑪ Pressure tappings on each filtration stage

Exchangers

⑫ Up to three threaded connections as standard

⑬ Inclined condensate drain pan in accordance with EN 13053

⑭ Sealing flange, total air efficiency and thermal bridge rupture between the pipes and the casing

Fans

⑮ Three types of fan available: LP, MP and plug fans (with AC or EC motor) in a range of sizes

⑯ Fans installed on an anti-vibration chassis with spring mounts as standard for all AC motor solutions

⑰ Internal flexible connector between the fan and the casing for all AC motor solutions

⑱ Motor mounted on an adjustable self-guided bracket

⑲ Packing box fitted for power supply

⑯ Anti-vibration mount

⑩ Compressible filter track

⑦ Seal

THE KEY TO AIRTECH'S EXCEPTIONAL PERFORMANCE IS ITS BENCHMARK FILTRATION SYSTEM.

Pre-filtering

Designed exclusively by CIAT, the filter supports meet the strictest quality standards for optimum sealing in accordance with the current EN 1886 standard.

Compressible tracks on the counter frame with a peripheral gasket guaranteeing a quality seal on the filtration system.

Unit filtration

Ultra-high unit filtration standard:

- Dual leakage barrier for enhanced performance,
- Separate panels to prevent any mechanical deformation when carrying out operations inside the unit, thereby helping protect the peripheral sealing gaskets.

THE HIGH-PERFORMANCE RANGE

The AIRTECH range consists of 14 sizes to handle air flow rates from 1000 to 66,000 m3/h.
The diagram below is used to pre-select the required size according to:

- The through speed in the front active section of the heat exchange coils
- The air flow rate to be handled

The diagrams show the standard compositions with the usage limit corresponding to the components.
Air heater (A), air conditioning unit without droplet separator (B), with drain screen separator (C), with blade-type separator (D).

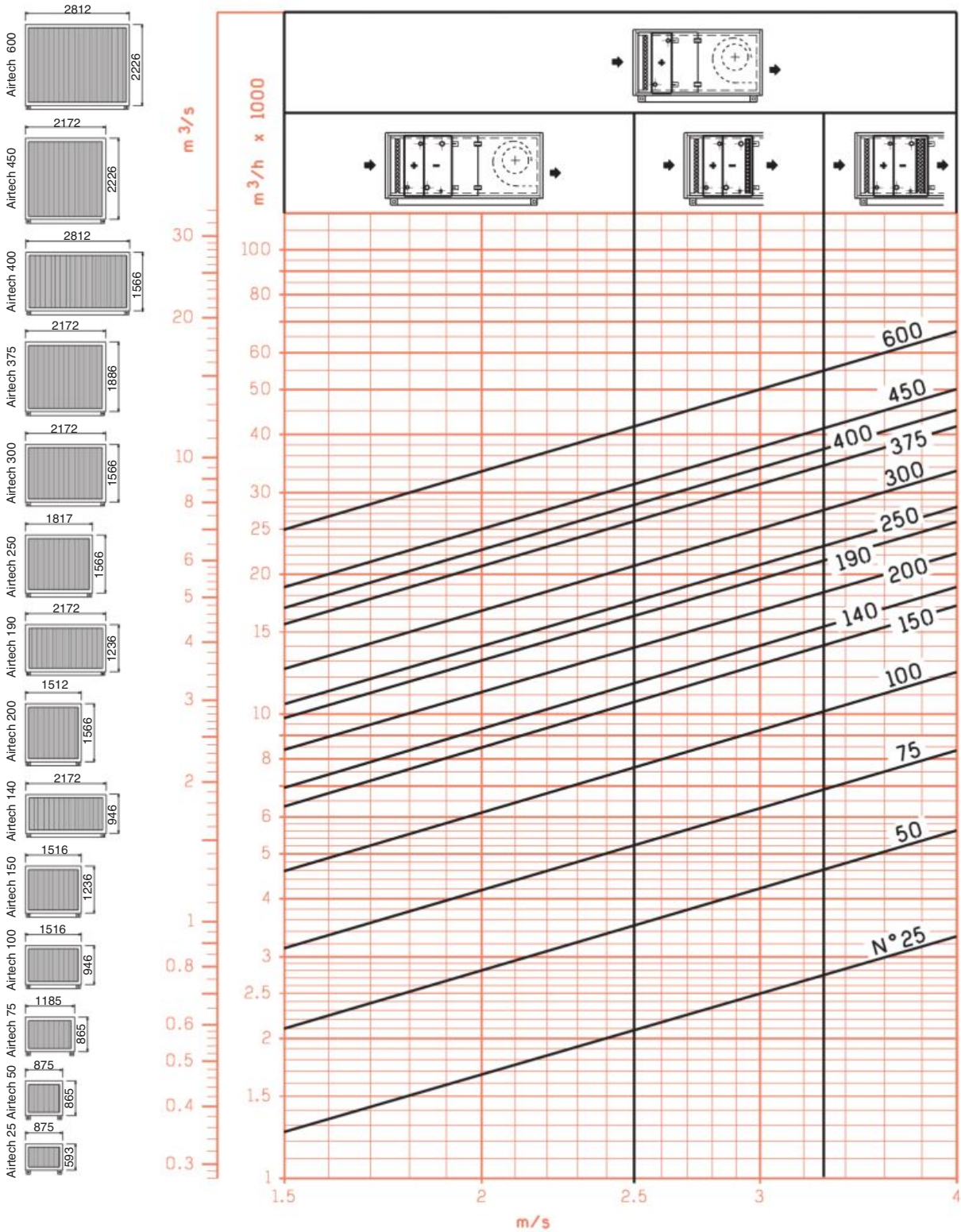

Please contact us for more information on this range.

AIRCLEAN

Air handling units

AIRCLEAN

Ultra-cleanliness has a name

AIRCLEAN SANTE

Healthcare has its experts

Air flow: *1 000 to 60 000 m³/h*

EUROVENT CERTIFIED PERFORMANCE
AHU N°04.04.050
Range : AIR
www.eurovent-certification.com

Specifications	Class	
	Size 25 to 75	Size 100 to 600
Mechanical strength	D1	D2
Airtightness	L1	L1
Filter bypass leakage	F9	F9
Thermal transmission	T2	T2
Thermal bridge	TB2	TB2

Description

Design, adaptation and options in complete accordance with the "hygiene" recommendations of the EN 13053 norm relating to air treatment of areas under controlled atmosphere.

High quality solutions and materials used.

Totally smooth internal design, all functions are fully cleanable and decontaminable.

Applications

AIRCLEAN

Clean rooms, laboratories, microelectronics, car industry, plastics processing.

AIRCLEAN SANTE

Pharmaceutical industry, hospitals

5

451

AIRCLEAN, THE ULTIMATE IN ULTRA-CLEANLINESS

An AHU that meets high demands

- Plug fan with profiled, high efficiency blades.
- Air flow control by an integrated frequency inverter with display (option).
- Filter assemblies adapted to the necessary level of filtration to ensure the highest filtration performances.
- Materials and coatings ensure the levels of chemical resistance, bacteriological cleanliness, and cleanability required to control contamination.
- Panels and accessories designed to meet the highest performance level requirements (airtightness, acoustics, thermal, etc.).

Meets new standards in performance

- Design tailored to the most stringent requirements of new-generation ultra-clean processes.
- Maximum efficiency particulate filtration.
- Reinforced seals withstand required pressure levels.
- Easy decontamination.
- Total control over quality, from design to manufacturing.

An AIRCLEAN concept

- Completely smooth inside and outside.
- White RAL 9010 coated casing inside and outside.
- Mineral wool insulation (long fibres, thickness 50 mm).
- Panels, inside components and accessories made of 304L or 316L stainless steel (option).
- Specific coatings and steels available for each function.
- Flat or sloped stainless steel bottom (option).

An AIRCLEAN SANTE concept

- Completely smooth inside.
- White RAL 7035 coated casing inside and outside.
- Mineral insulation (long fibres, thickness 50 mm).
- 4-slope hygienic condensates drain pan.
- Flat or sloped stainless steel bottom (option).

High standards right down to the smallest details

- Offset hinges and lockable handles made of composite materials: excellent corrosion resistance, proven strength, easy to open and close, good temperature resistance (-40 to +80°C).
- The hinge pins are designed to avoid any leakage and ensure the casing's thermal performances.
- Base frame raised above water.
- Double-shouldered door profile with specially shaped EPDM seal for optimum leakage performance.
- Large double-wall, square inspection window with central seals on the inside and outside and inside the panel provided by a one-piece bellow.

452

Filters

European Standards

EN 13053 design

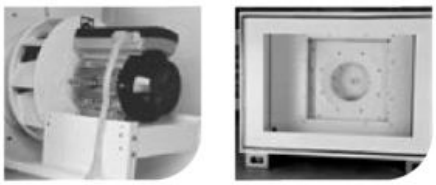

Fan motor assembly

Airtight handle designed by CIAT

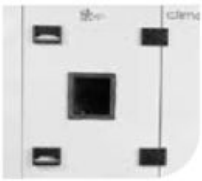

Inspection window

- Doors downline of fan open inwards.
- Dampers with opposing blades, “Class 3” airtightness in accordance with EN 1751 (Class 4 available as an option).
- Plug fan technology adapted to chosen operating points and desired acoustic performance levels.
- Integrated air flow control to ensure zero contamination (option).
- Fan assemblies adapted to performance levels and allowing optimum aerodynamic efficiency (connection sleeve size and quality, specially sized anti-vibration mounts, turbines sized to each enclosure in strict accordance with aerodynamic rules, etc.).
- Stainless steel condensates drain pan.
- Acoustic baffles have a special surface coating that prevents the release of particles from contaminating the air flow.
- Ultra-high unit filtration standard:
  - Dual leakage barrier ensures the full level of filtration for the entire filtration area.
  - Separate filtration area ground panel to prevent damage from any seal distortion.

453

AIRCLEAN, STRINGENT STANDARDS

Whisper quiet

- Obtaining the lowest overall noise level involves selecting the best fan, the prime source of noise in an air handling unit.
- The two walls of the panel are specially designed to absorb a maximum of noise. They are not connected and contain two different thicknesses (different natural frequencies).
- Each anti-vibration mount is selected to reduce vibration and noise phenomena “at the source”.
- The geometry of the sound attenuators is optimised to lower noise to the unit’s overall acoustic performance level.

Cleaned air

- High level of filtration efficiency ensured by assemblies adapted to each filter class (large-media frames for H10 and higher HEPA filtration).
- Usable with completely recyclable, new-generation filters with polypropylene media containing no fibre glass.
- Control and use of innovations in molecular and biological filtration that make it possible to address the issue of contamination by VOCs (Volatile Organic Compounds), bacteria, viruses, organic molecules, and even certain inorganic molecules.
- Filters comply with the maximum allowable pressure drops recommended in the EN 13053 standard.
- High-flow air washing systems operate using raw water, deionised water or ultrapure water.

Easy decontamination

- The AIRCLEAN AHU meets the hygiene requirements of EN 13053:
  - Accessibility, position and size of doors and inspection hatches.
  - Smooth panels for easy cleaning.
  - Sound attenuators that prevent particles from being released during servicing and operation
  - Inspection window (large section, full view) and lighting in all accessible sections.
  - Air leakage and filter bypass leakage comply with the highest classifications required by EN 1886.

Controlled humidity

STEAM HUMIDIFIER

- Self-contained steam generator
- Uses electrodes or heating elements depending on the quality of the water supply.
- The size and quality of the ducts are adapted to the steam generated.
- Stainless steel overflow pan and separator.
- Stainless steel ducts adapted to central steam generation systems.

ADIABATIC HUMIDIFIER

- Spray or sprinkling.
- Stainless steel enclosure and eliminator as standard.
- Pan washing lance.
- UV water treatment systems may be integrated.

Controlled environments

Meets the following standards governing air handling in controlled environments:

- NF S 90-351: Healthcare institutions - Clean rooms and associated controlled environments - Requirements for the control of airborne contamination.
- ISO 14644: Clean rooms and associated controlled environments, particularly sections relating to the classification of air cleanliness and design and operating specifications.
- Pharmaceutical GMP (Good Manufacturing Practices).

Common cleaning and decontamination procedures have been taken into account in the general design and the recommended locations of each function.

Unlimited modularity

- All filter classes up to H14 plus molecular filtration using specific absorbents.
- Heating (hot water supply, superheated water, steam or electricity), cooling (chilled water, direct expansion).
- Number of rows, circuiting, fin pitches and coil coatings adapted to thermal, hydraulic and environmental criteria.
- Droplet separator technology and quality adapted to operating conditions.
- Fans of all sizes (diameters 180 to 1 000 mm), scroll or plug types (optimised for desired operating point). All discharge configurations possible.
- Various coatings for each AHU section.
- All functions can be fully adapted to your space and location requirements.

Please consult us for any further information you may need on this product range.

HELIOTHERME 4000

Axial air heaters

The most competitively priced ***technical solution***
for heating large spaces
Ensures buildings warm up ultra fast
Excellent diffusion *via*
patented JET+ double deflection technology
High Energy Efficiency *motor version*

Heating **Cooling and heating**

Use

In wall-mounted or ceiling-mounted versions, the **HELIOTHERME** is the simple, affordable heating/cooling solution for all your applications: for your premises in the service sector (sales outlets, halls, multi-purpose rooms etc.) or in industry (workshop, garage, storage unit, logistics platform, etc.).

The HELIOTHERME range meets APSAD and NFPA recommendations on air velocities along the edges of units.

All are less than 5 m/s at 0.5 m from the diffuser and thus do not interfere with sprinkler systems.

The air heater may be combined with destratifiers (TPL) to promote mixing of the air within the building. (Anti-stratification solution)

HELIOTHERME ATEX version: voluntary type examination certificate LCIE 13 ATEX 1015 X gas and/or dust environment.

HELIOTHERME version 4631S: specially designed for "logistics platforms". Only available as hot water with 400 V/3 PH/50 Hz power supply.

Control

A range of "Plug & Play" proportional air-source/water-source controllers with heat exchanger (or electric heater) are used to control the air flow of the fan motor assembly and the heating capacity required for the room, according to the occupancy periods (built-in timer).

- LP water application + 1-PH AC Fan motor :
- Eco+ BOX can control up to 3 x 1-PH H4000.

- LP water application + 3-PH AC Fan motor :
- 3-PH Eco+ BOX can control up to 9 x 3-PH H4000.
- LP water application +1-PH HEE Fan motor :
- 1-PH HEE BOX can control

- 6 X 1-PH HEE H4000
- 6 X 1-PH HEE TPL
- 3 X 1-PH HEE H4000 + 3 X 1-PH HEE TPL
- 4 X 1-PH HEE H4000 + 4 X 1-PH HEE TPL

Options and accessories

- Wall bracket, ceiling bracket, IPN additional kit
- Filter box
- Specific diffuser (on door, high-level etc.)
- Room thermostat for THREE-PHASE or SINGLE-PHASE installation
- LS/HS switch for 3-PH fan motor assembly
- 5 speed autotransformer for SINGLE-PHASE AC FMAs
- Proximity switch
- Circuit breaker unit

5

455

RANGE

Heating/cooling medium	LP water	HP superheated water - Oil	HP steam	Electrical
Standard drive	THREE-PHASE 2 speeds – SINGLE-PHASE 1 variable speed IP 44 (H4350) and IP54 (H4400 to H4630)			
Reinforced variant	CORROBLOC version – IP 55/65 – 700-hour salt spray test			
Coil (tubing/row)	Copper/Alu	316L stainless steel/Alu	316L stainless steel/Alu	Stainless steel/Alu
Reinforced versions	316L stainless steel tubes/Heresite coating	Heresite coating		
Casing	Precoated off-white (RAL 7035) galvanised steel			
Reinforced versions	304L Stainless steel			
ATEX versions	LCIE 13 ATEX 1015 X – Zone 1 or 2 – IIB or IIC – T4 or T6			

Standard/HEE

Reinforced version
(high resistance to corrosion)

ATEX version

Heating/cooling medium	LP water with HEE FMA
HEE drive	1-phase variable speed with 0-10 V signal IP 54 (H4300 and H4350) and IP55 (H4400 to H4630)
Coil (tubing/row)	Copper/Alu
Casing	Precoated off-white (RAL 7035) galvanised steel **Condensate pan + built-in nautical coupling for cooling**
Reinforced versions	304L Stainless steel

H4000 MORPHO CODES

Range	Series	Size	Model	Coil	Thermal function	Specific options
H4000	4350	1R/1-PH AC	Wall-mounted	2T	Heating	Without

Wall-mounted
Ceiling unit*

2T: 2-tube standard
2TI: 2-tube stainless
TE: All electric***

Heating
Cooling
Heating/Cooling
Superheated water**
HP steam**
9 600 W***
18 900 W***
28 800 W***
42 300 W***

Without
Stainless steel casing
Corrobloc FMA****
Heresite coated coil
Altena coated coil

Heliotherme 4000	**1R/1-PH AC** 2R/1-PH AC 3R/1-PH C AC 3R/1-PH F AC 1R/3-PH AC 2R/3-PH AC 3R/3-PH AC
Helio 4000 HEE motor	1R/1-PH HEE 2R/1-PH HEE 3R/1-PH C HEE 3R/1-PH F HEE
Heliotherme ATEX AMBIANCE (GAS and Zone 2 only)	1R/3-PH AC/IIBT4 1R/3-PH AC/IIBT5 1R/3-PH AC/IICT4 1R/3-PH AC/IICT6 2R/3-PH AC/IIBT4 2R/3-PH AC/IIBT5 2R/3-PH AC/IICT4 2R/3-PH AC/IICT6 3R/3-PH C AC/IIBT4 3R/3-PH C AC/IIBT5 3R/3-PH C AC/IICT4 3R/3-PH C AC/IICT6 3R/3-PH F AC/IIBT4 3R/3-PH F AC/IIBT5 3R/3-PH F AC/IICT4 3R/3-PH F AC/IICT6
Heliotherme ELEC 4000	3-PH AC FMA
TPL SERIES 4000	1-PH AC 3-PH AC
TPL SERIES 4000 HEE MOTOR	1-PH HEE

Heliotherme 4000	**4350** 4400 4450 4500 4630 4630S
Helio 4000 HEE motor	**4300** 4350 4400 4450 4500 4630
Heliotherme ATEX AMBIANCE	4350 ATEX 4400 ATEX 4450 ATEX 4500 ATEX
Heliotherme ELEC 4000	4350 4400 4500
TPL SERIES 4000	4400 4450 4500 4630
TPL SERIES 4000 HEE MOTOR	4400 4450 4500 4630

Note:
* Except HELIOTHERME ATEX AMBIANCE
** Except HELIOTHERME 4000 HEE motor
*** HELIOTHERME ELEC 4000 only
**** HELIOTHERME 4000 only

DESCRIPTION

High-efficiency fan motor assembly

Silent FMA featuring an aluminium epoxy polyester-coated airfoil propeller to ensure the best compromise between air flow efficiency and acoustic comfort.

The ROTOREX design, with its electrical coils inserted into the fan hub, guarantees perfectly cooling of the motor to ensure it runs with optimum efficiency.

Three versions are available :

- **THREE-PHASE** 2 speed (230/400 V - 3-Ph - 50 Hz) *(accessory LS/HS switch)*
- **SINGLE-PHASE** 1 variable speed (230 V - 1-Ph - 50 Hz) *(accessory 5-speed autotransformer)*
- CORROBLOC version guaranteed to withstand corrosive environments.

CORROBLOC FMA

IP65/700-hour salt spray test

HEE FMA

Fan motor assembly equipped with a powerful HEE EC (electronically commutated) motor. These EC motors (single-phase 230 V - 1-Ph - 50/60V drive) will be progressively controlled by the 0-10 V signal, to ensure acoustic comfort and air flow efficiency and to optimise consumption of electricity. A shunt can be used to operate the air heater at maximum speed.

Casing

- Elegant galvanised steel casing, pre-coated with RAL 7035 (light grey) paint (stainless steel version available on request).
- Condensate drain pan built-in for cooling applications, featuring an antibacterial design (perforated bottom) and quick-release fitting (diameter 1'1/4).
- Intake section optimised for improved air flow performance and acoustic comfort level.
- Advantages:

- Its classic design means that it can easily blend into the architecture of the installation site.
- No need to add an unsightly condensate drain pan.
- Condensate pipes quick and extremely simple to connect, without any need for a clamp, (1'1/4 diam. quick-release fitting).

Diffuser

Double deflection diffuser made from rigid aluminium sections, based on the BERNOULLI fluid flow principle and on NACA0012 airfoils, creating a high induction rate on the primary air, in order to increase the air throws, limit the stratification phenomenon and thereby reduce energy consumption.

- **Basic version (only for the H 4630 S):**
- Single-deflection diffuser with directional louvre
- Light-grey galvanised steel louvre
- **JET+ version** (fitted as standard):
- Double deflection diffuser
- JET+ aluminium louvre with NACA0012 airfoil design
- Each louvre can be adjusted independently
- Advantages:

- Air flows adjustable in 4 directions for optimum coverage of the area to be handled, while limiting draughts.
- Laminar air flow for better acoustic comfort (zero turbulence at the diffuser outlet).
- Increased air speed, thanks to the resulting aerodynamics (depression along lower surface of blade) due to the curve of the airfoil, thereby increasing the air throws and the induction rate.
- Limited stratification phenomenon.
- Reduced building warm-up times:
- Recorded energy savings of 15 to 20%.

Heat exchanger

HIGH EFFICIENCY heat exchanger coil with tapered intake baffles, to help pressurise the finned block, available in four versions:

- **LP hot or cold water version** – Available with 1, 2 or 3 rows:
- Copper tube Ø 9.52 mm
- Embossed aluminium fins – Thickness 10/100 mm
- Fin spacing 2.1 mm
- Advantage: Excellent thermal yield (dry transfer coefficient > 50 W/m².k)
- **HP superheated water - oil version** – Available with 1 row:
- Heavy-gauge 316L stainless steel tubing (Ø 16 mm)
- Embossed aluminium fins – Thickness 28.5/100 mm
- Fin spacing 2.5 mm
- Compatible for use with thermal oils
- Advantage: robust finned aluminium coil block suitable for use in industrial environments (dirty air) and may be cleaned using a high-pressure water jet.
- **HP steam version** – Available with 1 row:
- Heavy-gauge 316L stainless steel tubing (Ø 16 mm)
- Embossed aluminium fins – Thickness 28.5/100 mm
- Fin spacing 2.5 mm
- Advantage: excellent corrosion resistance thanks to chemicals pumped through steam network piping.
- **Electric version** – Four capacities available:
- Stainless steel single-tube heating element
- Embossed aluminium fins – Thickness 10/100 mm
- Fin spacing 2.5 mm
- Double overheating thermostat with automatic and manual reset for compliance with fire safety standards (CH37)
- Advantage: Heating elements inserted directly into the finned block ensure excellent heat transfer.

HELIOTHERME PERFORMANCE - SUPERHEATED WATER AND STEAM 230 V/1-PH/50 HZ MOTOR - AC AND HEE

HEATING - 230 V/1-Ph/50 Hz motor - AC and HEE

Model	No. rows	Air supply speed SINGLE-PHASE	Flow rate m³/h	Air speed m/s	Range (metres)		Heating capacity (kW)		Sound pressure
					Wall-mounted	Suspended	SW	HPS	dB(A)
H4300	2	Direct	1 420	3.16 m/s	15	3			45
H4350	1	Direct	2 600	3.92 m/s	22	6	29	32	48
		R3*	2 360	3.56 m/s	18	4	27	29	46
	2	Direct	2 400	3.62 m/s	20	5			49
		R3*	2 030	3.06 m/s	15	2.5			47
	3	Direct	2 075	3.13 m/s	15	2,5			50
		R3*	1 780	2.68 m/s	14	2			48
H4400	1	Direct	4 200	4.57 m/s	26	8,5	43	46	54
		R3*	3 914	4.26 m/s	24	7.5	39	42	52
	2	Direct	3 800	4.13 m/s	23	7			55
		R3*	3 550	3.86 m/s	19	4.5			53
	3	Direct	3 450	3.75 m/s	23	7			56
		R3*	3 220	3.50 m/s	20	5.5			54
H4450	1	Direct	5 200	4.20 m/s	27	8,5			56
		R3*	4 100	3.31 m/s	24	6			49
	2	Direct	4 700	3.80 m/s	21	4,5			58
		R3*	3 700	2.99 m/s	18	4			51
	3	Direct	4 550	3.68 m/s	18	3,5			59
		R3*	3 650	2.95 m/s	17	3			52
H4500	1	Direct	7 100	4.22 m/s	28	9	79	77	56
		R3*	5 700	3.39 m/s	26	7	66	70	50
	2	Direct	6 600	3.92 m/s	26	7			57
		R3*	5 380	3.20 m/s	24	6			51
	3	Direct	6 200	3.69 m/s	24	6,5			58
		R3*	5 055	3.01 m/s	23	5.5			52
H4630	1	Direct	10 450	4.19 m/s	28	10,5	103	107	54
		R3*	8 900	3.57 m/s	22	8	93	98	47
	2	Direct	9 610	3.86 m/s	24	8,5			55
		R3*	7 630	3.06 m/s	20	6			46
	3	Direct	8 280	3.32 m/s	21	6,5			56
		R3*	6 270	2.52 m/s	19	5			44

HEATING - COOLING - 230 V/1-Ph/50 Hz Motor - HEE

Model	No. rows	Air supply speed	Air flow rate m³/h	Air speed m/s	Range (metres) Wall-mounted	Sound pressure dB(A)
H4300 HEE	2	Direct	1200	2.67 m/s	12	43
H4350 HEE	3	Direct	1640	2.47 m/s	23	30
H4400 HEE			2160	2.35 m/s	26	48
H4450 HEE			3025	2.44 m/s	24	45
H4500 HEE			4060	2.41 m/s	23	54
H4630 HEE			5960	2.39 m/s	21	53

ELECTRIC HEATING - 230 V/1-Ph/50 Hz motor - AC only

Model	Air supply speed	Flow rate m³/h	Air speed m/s	Range (metres) Wall-mounted	Electrical power (kW)			Sound pressure dB(A)
					Total	No. of stages	Power per stage	
4350	Direct	2600	3.92 m/s	22	9.6 kW	2	2.4 kW	48
	R3*	2360	3.56 m/s	18			7.2 kW	46
4400	Direct	4200	4.57 m/s	27	18.9 kW	2	5.4 kW	54
	R3*	3914	4.26 m/s	24			13.5 kW	52
4500	Direct	7100	4.22 m/s	28	28.8 kW	2	10.8 kW	56
	R3*	5700	3.39 m/s	26			18 kW	50
	Direct	7100	3.92 m/s	28	43.2 kW	3	14.4 kW x 3	56
	R3*	5700	3.20 m/s	26				50

Specifications determined using the following information:

- **Superheated water (HP SW):** Temperature 180 - 120 °C/RT=15 °C – RH 50 %
- **Steam (HPS):** Temperature 175 °C - 8 bar/RT=15 °C – RH 50 %
- **Cooling:** temperature 7 - 12 °C / RT=27 °C – RH 50 %
- **Air stream:** * with **JET+** diffuser for a residual speed of 0.1 m/s
  * defined with Δt OT/RT of 15 °C (heating) and 7 °C (cooling)
  * with LP water or electric heating
- **Air speed:** **JET+** diffuser outlet
- **Sound pressure:** measured 5 metres from unit, directivity 2, attenuation of 22 dB

➪ **Direct:** speed obtained when wired directly to single-phase motor.

➪ **R3*** (version with AC motor): supply air velocity obtained with autotransformer set to "3". Other operation points (5 in total) can be supplied on request by your agent using our technical selection software.

HELIOTHERME PERFORMANCE SUPERHEATED WATER AND STEAM 400V/3PH/50 HZ MOTOR

HEATING - 400V/3Ph/50 Hz motor

Model	No. rows	Air supply speed		Flow rate	Air speed	Range (metres)		Heating capacity (kW)		Sound pressure
		3-PH		m³/h	m/s	Wall-mounted	Suspended	SW	HPS	dB(A)
H4350	1	HS	△	2 600	3.92 m/s	22	6	29	32	48
		LS	★	2 210	3.33 m/s	17	3,5	27	29	44
	2	HS	△	2 480	3.74 m/s	20	5			49
		LS	★	2 040	3.07 m/s	15	2,5			45
	3	HS	△	2 165	3.26 m/s	18	4,5			50
		LS	★	1 775	2.67 m/s	14	2			46
H4400	1	HS	△	4 000	4.35 m/s	25	8	42,7	45,7	55
		LS	★	3 480	3.79 m/s	21	5	38	41	51
	2	HS	△	3 800	4.13 m/s	23	7			55
		LS	★	3 310	3.60 m/s	18	4			51
	3	HS	△	3 400	3.70 m/s	22	6,5			56
		LS	★	2 960	3.22 m/s	17	3,5			52
H4450	1	HS	△	5 400	4.36 m/s	28	9			56
		LS	★	3 910	3.16 m/s	23	5,5			49
	2	HS	△	5 300	4.28 m/s	25	8			57
		LS	★	4 140	3.34 m/s	21	4,5			50
	3	HS	△	5 000	4.04 m/s	24	7,5			59
		LS	★	3 910	3.16 m/s	20	4			52
H4500	1	HS	△	7 500	4.46 m/s	30	10	79,4	77,4	56
		LS	★	5 740	3.41 m/s	26	7	66,2	70,1	50
	2	HS	△	6 900	4.10 m/s	28	9			57
		LS	★	5 400	3.21 m/s	24	6			51
	3	HS	△	6 500	3.86 m/s	26	8,5			58
		LS	★	5 020	2.98 m/s	23	5,5			52
H4630	1	HS	△	11 140	4.47 m/s	29	11,5	110	115	55
		LS	★	9 635	3.87 m/s	24	8,5	100	105	48
	2	HS	△	10 510	4.22 m/s	26	10,5			56
		LS	★	8 820	3.54 m/s	22	7,5			49
	3	HS	△	9 175	3.68 m/s	25	10			57
		LS	★	7 545	3.03 m/s	21	7			49

ELECTRIC HEATING - 400V/3Ph/50 Hz motor

Model	Air supply speed		Flow rate	Air speed	Range (metres)	Electrical power (kW)			Sound pressure
			m³/h	m/s	Wall-mounted	Total	No. of stages	Power per stage	dB(A)
H4350	HS	△	2600	3.92 m/s	22	9.6 kW	2	2.4 kW	48
	LS	★	2210	3.33 m/s	17			7.2 kW	44
H4400	HS	△	4000	4.35 m/s	25	18.9 kW	2	5.4 kW	55
	LS	★	3480	3.79 m/s	21			13.5 kW	51
H4500	HS	△	7500	4.46 m/s	30	28.8 kW	2	10.8 kW	56
	LS	★	5740	3.41 m/s	26			18 kW	50
	HS	△	7500	4.10 m/s	30	43.2 kW	3	14.4 kW x 3	56
	LS	★	5740	3.21 m/s	26				50

Specifications determined using the following information:

- **Superheated water (HP SW)** : Temperature 180 - 120 °C/RT=15 °C – RH 50 %
- **Steam (HPS):** Temperature 175 °C - 8 bar/RT=15 °C – RH 50 %
- **Air stream:** * with **JET+** diffuser for a residual speed of 0.1 m/s
  * defined with △**t** OT/RT of 15 °C
  * with LP water or electric heating
- **Air speed**: **JET+** diffuser outlet
- **Sound pressure:** measured 5 metres from unit, directivity 2, attenuation of 22 dB

TPL DETERMINATION AND SELECTION EXAMPLE (DESTRATIFIER)

S = Supply (released at the top of the building)

TR = Temperature under roof

TW = Temperature setpoint in the work area

$$\text{Calculated flow rate for destratifiers} = \frac{A}{0.3 \times (TR-TW)}$$

Selection example:
Supply under building roof = S = 45,000 kcal (52,200 Watts)
Temperature under roof = TR = 30°C
Temperature setpoint in the work area = TW = 16°C

$$\text{Calculated flow rate for destratifiers} = \frac{45\,000}{0.3 \times (30-16)} = 10714 \text{ m}^3/\text{h}$$

So: 2 x TPL 4500 at HS or 1 x TPL 4630 at HS.

TPL AIR FLOW AND ACOUSTIC PERFORMANCE

TPL		4400		4450		4500		4630	
230/400V-3Ph-50 Hz Motor		HS	LS	HS	LS	HS	LS	HS	LS
(3-phase 400V coupling)		△	*	△	*	△	*	△	*
230 V-1-Ph-50 Hz Motor AC and HEE		Direct	-	Direct	-	Direct	-	Direct	-
Flow rate	m^3/h	4400	3000	6000	4100	8000	5500	11500	8800
Air stream	m	15	8	14	9	16	10	19	14
Sound pressure	dB(A)	51	43	54	46	57	47	55	50

Specifications determined using the following information:
Air stream:* with JET+ diffuser for a residual speed of 0.1 m/s
Sound pressure: * measured 8 metres from unit, directivity 2, attenuation of 26 dB

ELECTRIC MOTOR SPECIFICATIONS

Use	Model	Motor	Rotation speed in rpm	Nom. current A	Max power input (W)	IP	Thermal cut-out	Class	Operating temp
HEATING	H4350	THREE-PHASE 230/400V - 3Ph - 50 Hz	**HS - △ 1385**	**0,35**	**110**	44	YES 6.3 A - 165 °C	F	-40°C / +60°C
			LS - ★ **1175**	0,15	70				-40°C/+70°C
	H4400 TPL4400		**HS - △ 1404**	**0,5**	**260**	54			
			LS - ★ **1176**	0,3	170				
	H4450 TPL4450		**HS - △ 1385**	**1,13**	**550**				
			LS - ★ **1040**	0,64	380				
	H4500 TPL4500		**HS - △ 1391**	**1,51**	**770**				
			LS - ★ **1176**	0,9	520				
	H4630 TPL4630		**HS - △ 870**	**1,3**	**590**				
			LS - ★ **750**	0,63	250				
HEATING	H4350	1-PH 230 V - 1-Ph - 50 Hz - AC	Direct **1330**	0,7	150	44	YES 6.3 A - 165 °C	F	-40°C / +60°C
	H/TPL4400		Direct **1400**	1,3	300	54			-40°C/+70°C
	H/TPL4450		Direct **1380**	2,01	480				
	H/TPL4500		Direct **1403**	2,78	630				
	H/TPL4630		Direct **913**	2,6	580				
HEE FMA									
HEATING	H4300	1-PH 230 V - 1-Ph - 50/60 Hz - HEE	**1530**	0,8	85	54	PTC	B	-25°C/+55°C
	H4350		**1480**	1,35	165	54	PTC	B	-25°C/+50°C
	H/TPL4400		**1760**	2,2	500	55	Thermal cut-out	B	-25°C/+60°C
	H/TPL4450		**1500**	2,2	500	55	Thermal cut-out	B	-25°C/+60°C
	H/TPL4500		**1440**	3,25	740	55	Thermal cut-out	B	-40°C/+60°C
	H/TPL4630		**1020**	3,2	730	55	Thermal cut-out	B	-40°C/+60°C
COOL-ING	H4300		**1530**	0,8	85	54	PTC	B	-25°C/+55°C
	H4350		**1040**	0,65	73	54	PTC	B	-25°C/+60°C
	H4400		**1760**	2,2	500	55	Thermal cut-out	B	-25°C/+60°C
	H4450		**1500**	2,2	500	55	Thermal cut-out	B	-25°C/+60°C
	H4500		**970**	1,1	250	55	Thermal cut-out	B	-25°C/+60°C
	H4630		**770**	1,1	250	55	Thermal cut-out	B	-25°C/+60°C

COIL SPECIFICATIONS

		4300	4350			4400			4450			4500			4630		
LOW PRESSURE WATER COIL	Number of heating rows	2	1	2	3	1	2	3	1	2	3	1	2	3	1	2	3
	Number of cooling rows	2	3														
	Coil capacity (L)	0,8	0,68	1,18	1,66	0,96	1,59	2,28	1,38	2,27	3,22	2,18	3,38	4,55	2,97	4,7	6,4
	Connection diameter	½"	¾"						1"			1" ¼					
	Connection type	Threaded unions 243 GCU F/M															
	Maximum operating pressure	13 bar															
	Test pressure	24 bar															
	Max T°	110°C															
HP OIL/WATER COIL	Number of heating rows		1														
	Coil capacity (L)		1,19			1,69			-			2,66			3,69		
	Connection diameter		33.7 mm			42.4 mm			-			42.4 mm					
	Connection type		Smooth 316L stainless steel tube for welding														
	Maximum operating pressure		13 bar														
	Test pressure		24 bar														
	Max T°		200°C														
HP STEAM COIL	Number of heating rows		1														
	Coil capacity (L)		0,97			1,22			-			1,95			2,86		
	Connection diameter		26.9 mm			33.7 mm			-			48.3 mm					
	Connection type		Smooth 316L stainless steel tube for welding														
	Maximum operating pressure		16 bar														
	Test pressure		24 bar														
	Max T°		200°C														

Version with Heresite coating available upon request. Contact our sales network.

DIMENSIONS

HELIOTHERME

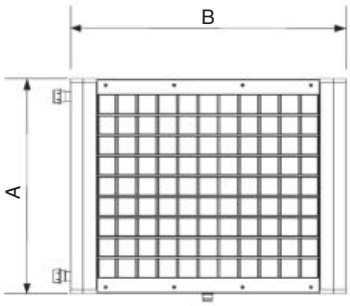

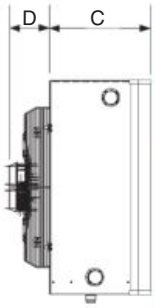

Size	A	B	C	D		Weight (kg)		
				STD	HEE			
	mm					1 row	2 rows	3 rows
H4300	395	600	286	-	115	-	18	-
H4350	460	646	286	101	126	21	24	26
H4400	557	700	286	142	143	30	32	34
H4450	620	813	286	142	143	40	42	44
H4500	716	918	336	142	188	50	53	56
H4630	876	1050	336	142	200	62	67	72
H4630S	872	1050	295	126	-	60	-	-

TPL DESTRATIFIER

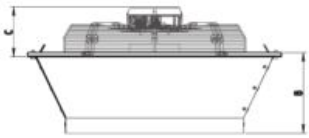

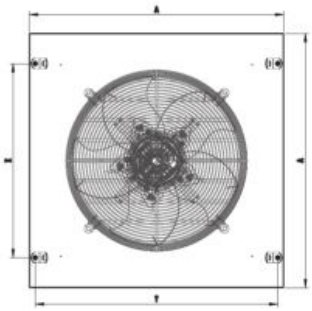

TPL	A	B	C		X	Y	Weight (kg)
			STD	HEE			
TPL4400	586	183	143	143	370	552	17
TPL4450	666	212	143	143	470	632	22
TPL4500	747	225	143	188	570	712	25
TPL4630	907	273	143	200	705	872	33

INSTALLATION

HELIOTHERME

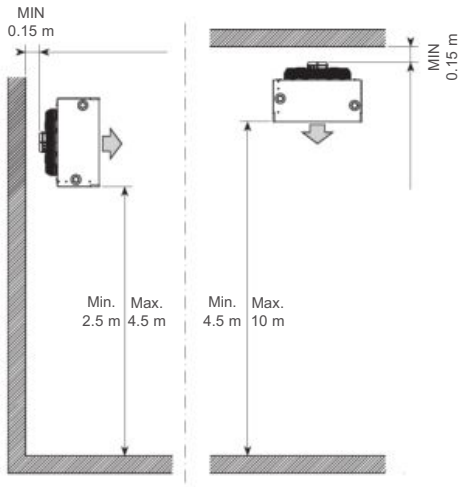

Wall-mounting Ceiling-mounting

DESTRATIFIER
(Recommended if building height > 5m)

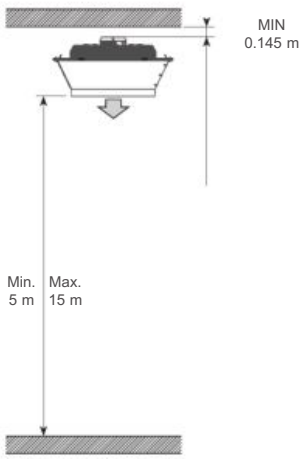

5

ASSEMBLY ACCESSORIES

A different assembly for each use.

RETURN AIR MODULE

Size	A	B	C	Codes
4300	395		220	*7417083*
4350	440			*7185105*
4400	520			*7185106*
4450	600			*7185107*
4500	680			*7185108*
4630	840			*7185110*

Filter box (G1 filter in accordance with EN 779)
Prevents premature fouling of the exchanger coils
Not ductable

DIFFUSION MODULE

Size	A	B	C	Codes
4300	750	655	300	*7417084*
4350	750	700	300	*7185133*
4400	850	750	325	*7185134*
4450	970	850	350	*7185135*
4500	1100	970	375	*7185136*
4630	1250	1170	400	*7185137*

Diffuser on door
Create an air curtain that limits energy loss when doors are opened.
Warning: Use a system that is suited to the diffuser mounting.

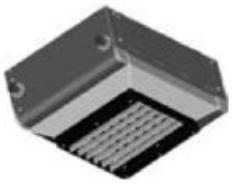

Size	A	B	C	Codes
4300	_	_	_	_
4350	_	_	_	_
4400	178	555	522	*7185138*
4450	136	637	618	*7185139*
4500	132	740	714	*7185140*
4630	282	872	814	*7185141*

Diffuser for large spaces
Reduction cone for increasing the air throws.

ASSEMBLY SUPPORT ACCESSORIES

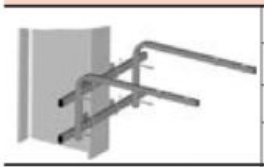

Size	Codes
All	*7181226*
300 to 450	*7181228*
500 to 630	*7181230*

Wall bracket

Additional kit for fastening on an IPN

Size	Codes
All	*7282116*

Suspension support for ceiling mounting

464

ELECTRICAL ACCESSORIES

ELECTRICAL & USER SAFETY

Codes	Padlockable proximity switch
0596142	Available in a 1 or 2-speed version, this accessory must be placed at least 2 metres from any rotating part, to comply with French standard IT 246, Art. 4-7-3, and EC requirements.
0596147	

Use	Circuit breaker unit - FMA 1 AC-PH heating	Circuit breaker unit - HEE FMA 1-PH heating	Circuit breaker unit - HEE FMA 1-PH cooling	Circuit breaker unit - 3 AC -PH
H4300		*7252526*	*7252526*	
H4350	*7252526*	*7252527*	*7252526*	*7252523*
H4400	*7252527*	*7252528*	*7252528*	*7252525*
H4450	*7252528*	*7252528*	*7252528*	*7252527*
H4500	*7252529*	*7252529*	*7252527*	*72525227*
H4630	*7252529*	*7252529*	*7252527*	*7252527*
TPL4400	*7252527*	*7252528*		*7252525*
TPL4450	*7252528*	*7252528*		*7252527*
TPL4500	*7252529*	*7252529*		*7252527*
TPL4630	*7252529*	*7252529*		*7252527*

THERMOSTATS

Codes	Manual/auto room thermostat – SINGLE-PHASE installation
7486653	7486653: 3-speed motor EC thermostat kit (for HEE SINGLE-PHASE FMA) - Heating and cooling with manual toggle switch - Inductive breaking capacity 3.53A
7486654	7486654: 1-speed AC thermostat kit (for AC SINGLE-PHASE FMA) Heating and cooling with manual toggle switch - Inductive breaking capacity 3.53A

Codes	IP54 industrial environment thermostat – THREE-PHASE installation
7113335	7133335: 1 stage
7113336	7133336: 2 stages

SUPPLY AIR SPEED SELECTION

Codes	LS/HS switch
7169961	For 3 AC-phase motor, selects two motor rotation speeds and stop.

Codes	Autotransformer with selector switch (3.5 A)
7166982	Adjusts the voltage on single-phase motors AC with one variable speed to achieve up to five supply air speeds.

HEE Single-phase HELIOTHERME control (Motor EC)

HEE 1-PH BOX range, controls 6 Heliotherme units, 6 TPL, 3 Heliotherme units + 3 TPL , 4 Heliotherme units + 2 TPL

Figure A

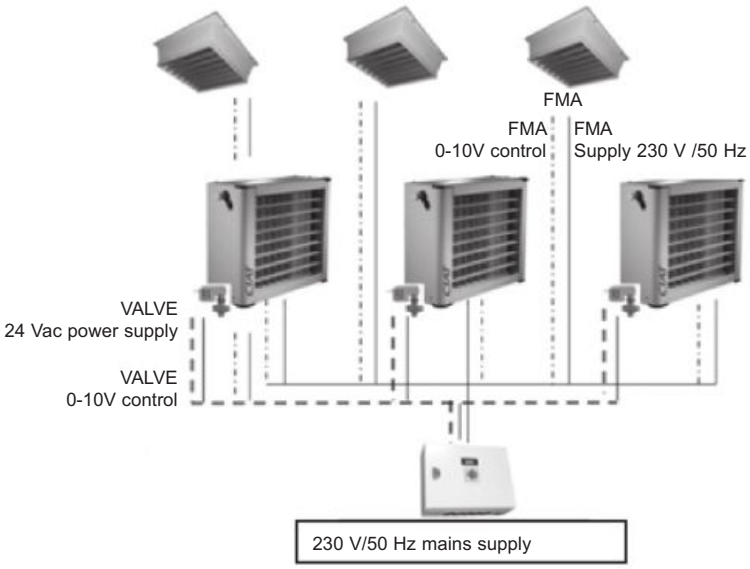

Single-phase HELIOTHERME control (Motor AC)

Eco+ 1-PH BOX range

Figure B

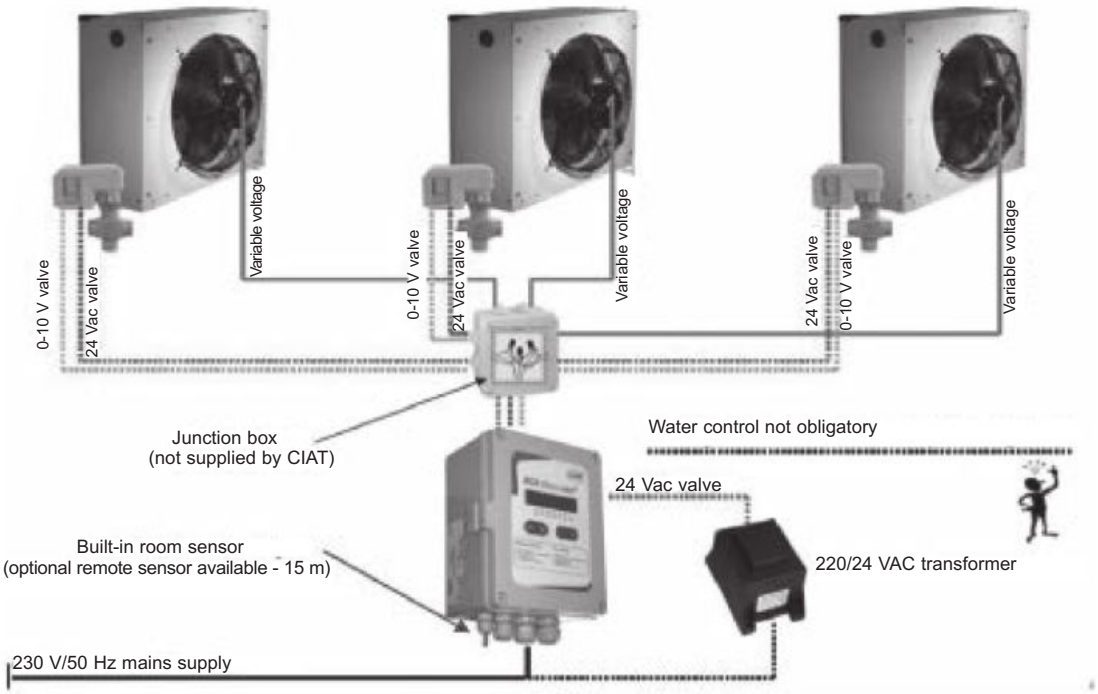

HELIOTHERME 3-PH CONTROL MOTOR AC

3-PH Eco+ BOX range

Figure C

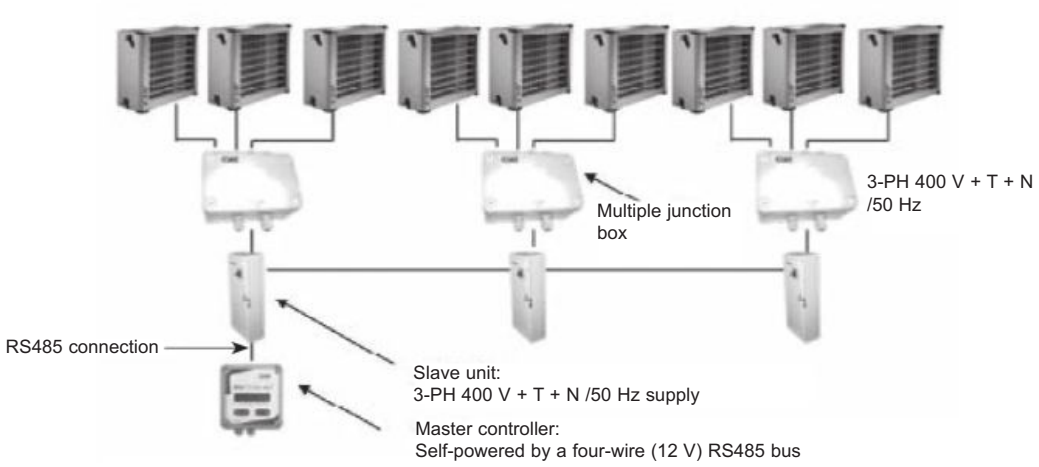

Figure D

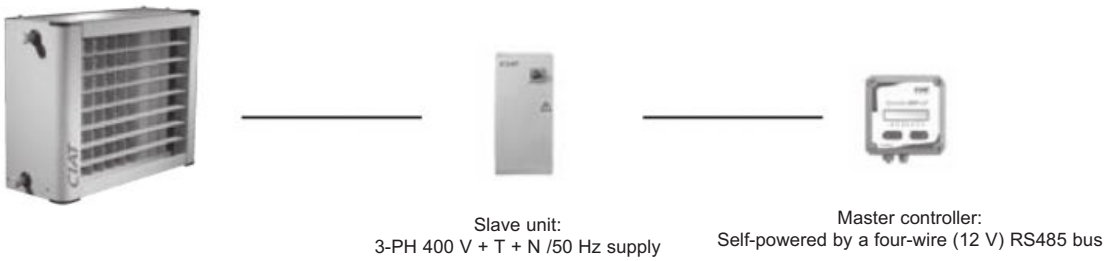

ELECTRICAL HELIOTHERME CONTROL (schema library on BOX ELEC Eco+ user manual)

BOX ELEC Eco+ range

Figure E

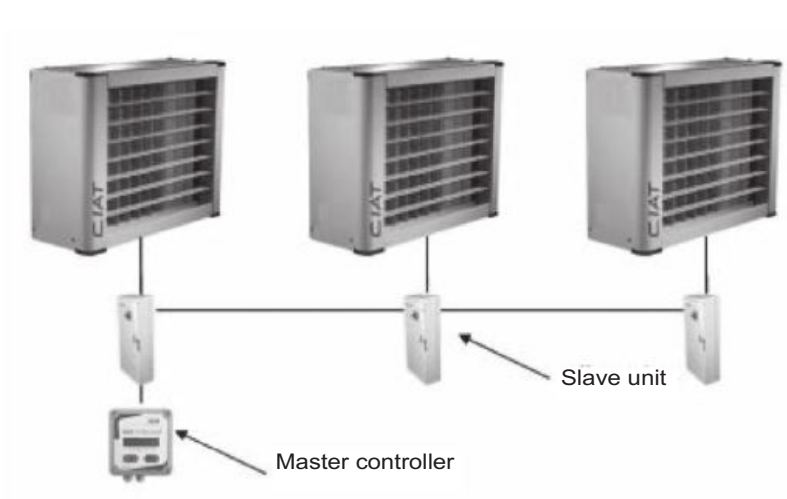

TECHNICAL SPECIFICATIONS OF THE DIFFERENT CONTROLLERS

HELIOTHERME or TPL CONTROL AND ACCESSORIES				
CONTROL	1-PH HEE BOX	1-Ph ECO+ BOX unit	3-PH ECO BOX + multiple junction box	ECO + ELEC BOX
Figure	A	B	C and D	E
FUNCTION				
Number of heliotherms or TPL that can be controlled	1 to 6	1 to 3	1 to 9	1 to 3
Protection rating	54	55	55	55
Weekly timer (Comfort/ECO/frost protection)	Included	Included	Included	Included
Supply Voltage/Phase/Frequency	230 V/1/50 Hz	230 V/1/50 Hz	400 V/3/50 Hz+N	400 V/3/50 Hz+N
Electrical protection (circuit breakers, connectors, disconnect switches)	Included	TO BE FITTED	Included	Included
Air control	Proportional 0 - 10V	Proportional 110 - 230 V	2-speed LS/HS	1 speed LS or HS
Water control	Proportional 0 - 10V	Proportional 0 - 10V	Proportional 0 - 10V	
Integrated temperature sensor	INCLUDED	INCLUDED	INCLUDED	INCLUDED
Remote on/off switch and fault summary	INCLUDED	NOT INCLUDED	NOT INCLUDED	NOT INCLUDED
MODBUS/LON and BACnet IP communication	OPTION	NO	NO	NO
Fresh air control	YES	NO	NO	NO
ACCESSORIES				
BOX CONTROL	7391284	7184939	7219774	7219774
Slave unit for Eco+ 3-PH BOX			7218912	
BMR Eco+ 3-PH BOX Multiple connection unit (controls max. 3 units)			7239492	
Eco+ ELEC BOX slave unit - 9.6 KW (for H4350 TE 3-PH)				7218907
Eco+ ELEC BOX slave unit - 18.9 KW (for H4400 TE 3-PH)				7218908
Eco+ ELEC BOX slave unit - 28.8 KW (for H4500 TE 3-PH)				7218910
Eco+ ELEC BOX slave unit - 43.2 KW (for H4500 TE 3-PH)				7218911
½ " valve kit KV 1.6 (H4300)	B403210			
¾ " valve kit – KV 2.5 (H4351-4352-4401-4451)	B400410			
¾ " valve kit – KV 4 (H4353-4402-4403-4452-4501)	B400411			
1" ½ valve kit – KV 6.3 (H4453-4502-4503-4631)	B400412			
1" ½ valve kit – KV 10 (H4632-4633)	B400413			
220/24 Vac safety transformer (required for the power supply of the valve servomotor(s) (010 V)	INCLUDED	7435107	INCLUDED	
Change-over switch thermostat (for automatic Summer-Winter change-over)	7128892			
Padlockable proximity switch 6P for 3-PH Eco+ BOX			0596147	INCLUDED
Padlockable proximity switch 3P for MONO or HEE Eco+ Box	0596142	0596142		
Remote sensor	7462538	7207381		

HELIOTHERME..... is also the solution for ATEX compliance

Ex II 2 G/D
II c 65 °C - 105 °C or 120 to 220 °C
EEx d/de IIB or IIC T4 to T6 – IP 6X/5X T… °C

CIAT has put all its expertise and know-how into a special series of ATEX certified HELIOTHERME units.
This approval, issued by an independent external body, is your guarantee of complete compliance with the ATEX directives.
The ATEX HELIOTHERME range is certified for your applications:

- In the presence of explosive gas (Dust on request)
- In zone 2 (Zone 1 on request)
- For IIB or IIC explosion groups
- With T4 to T6 gas auto-ignition temperatures
- Low pressure water, superheated water, steam, oil, compressed air, etc.

CE Ex II 2 G/D

What is ATEX?

ATEX or explosive atmosphere can be caused in atmospheric conditions by flammable gases, vapours or mists or by combustible dusts mixed with air. After ignition, combustion spreads through the whole of the unburnt mixture.

How is an ATEX zone defined?

ATEX zones are determined based on the probability and duration of the occurrence of an explosive atmosphere. This risk analysis is used to define zones, explosion groups and maximum surface temperature classes. These atmospheres are mainly found in painting workshops, metal processing workshops, waste recycling, wood processing, etc.

Who defines ATEX zones?

Any operator of a production facility where an explosive atmosphere may occur must define the relevant ATEX zones, explosion groups and temperature classes. By doing so, the operator will also be able to set up the necessary means of prevention (communication, documentation, recommendations, etc.).

"Directive 94/9/EC divides the equipment and protective systems which it covers into equipment groups and categories; this Directive (1999/92/EC) provides for a classification by the employer of the places where explosive atmospheres may occur in terms of zones and determines which equipment and protective systems groups and categories should be used in each zone."

ZONE		Category	The explosive agent is:
Gas (G)	Dust (D)		
0	20	0	Occurs continuously, often and over extended periods: **NOT APPLICABLE TO ANY CIAT PRODUCTS**
1	21	1	Occasionally present during normal use
2	22	2	Rarely or briefly present

GAS - EXPLOSION GROUP AND TEMPERATURE CLASS						
Temperature class	T1	T2	T3	T4	T5	T6
Max surface temp	450°C	300°C	200°C	135°C	100°C	85°C
Explosion group						
IIA	Acetone Ammonia Benzene Acetic acid Ethane Ethyl acetate Ethyl chloride Methanol Naphthalene Phenol Propane	i-Amyl acetate Butane Butyl alcohol	Petrol Diesel Hot oil Hexane	Acetaldehyde		
II B	Town gas	Ethylene	Hydrogen sulphide	Ethyl ether		
II C	Hydrogen	Acetylene				Carbon disulphide

5

OPERATING LIMITS

	Cooling mode	Heating mode	Steam mode	Superheated water mode
Water circuit	Min. water inlet temp.: 5 °C Max. operating pressure: 13 bar	Min. water inlet temp.: 110 °C Max. operating pressure: 13 bar	Max. temp./Operating pressure: 200 °C / 16 bar	Max. water inlet temp.: 200 °C Max. operating pressure: 16 bar
Indoor temperature	Tmax: 60 °C and Tmin -15 °C			
1-PH AC motor		230V(+/-6%) / 50 Hz - 1-Ph H4350 : IP44 H4400 - 4450-4500-4630: IP 54	230V(+/-6%) / 50 Hz - 1-Ph H4350 : IP44 H4400 - 4450-4500-4630: IP 54	230V(+/-6%) / 50 Hz - 1-Ph H4350 : IP44 H4400 - 4450-4500-4630: IP 54
3-PH AC motor		400V(+/-6%) / 50 Hz - 3-Ph H4350 : IP44 H4400 - 4450-4500-4630: IP 54	400V(+/-6%) / 50 Hz - 3-Ph H4350 : IP44 H4400 - 4450-4500-4630: IP 54	400V(+/-6%) / 50 Hz - 3-Ph H4350 : IP44 H4400 - 4450-4500-4630: IP 54
1-PH EC motor	230 V (+/-6%)/ 50/60 Hz - 1-Ph IP54 : H4300 and H4350 IP 55 : H4400-H4450-H4500-H4630	50/60 Hz - 1-Ph IP54 : H4300 and H4350 IP 55 : H4400-H4450-H4500-H4630		

EXPAIR

Precision air handling cabinets

Compact footprint
Dual-wall construction
Fan motor assembly with
EC motor (electronically commutated)
PLC control
Condenser fan variable speed control

Chilled water :
Cooling capacity : 5 to 27 kW
Air flow rate : 800 to 6 000 m³/h
Direct expansion :
Cooling capacity : 5 to 47 kW
Air flow rate : 800 to 12 000 m³/h

ErP READY

HFC R410A

Use

Precision air conditioning cabinet specially designed for the air handling requirements (filtration, temperature and humidity control) of computer rooms, telecommunications rooms and specific purpose rooms (electronics, sensitive storage, medical, controlled atmosphere rooms, etc.).
Dual-wall construction. The choice of technology used (self regulation depending on the room loads, EC motor: electronically commutated) can reduce the energy consumption.
This unit is quick and easy to install, and particularly simple to use.

EXPAIR CW

Cabinet supplied with chilled water.

EXPAIR DXA

Vertical self-contained unit with separate air condensation unit (CL2) (R410A).

Assembly

UNDER installation: reversed air supply

Installation 1

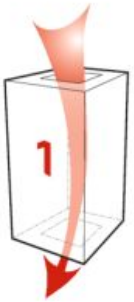

Air supply via raised floor

Installation 3

Front return

OVER installation: top air supply

Installation 4

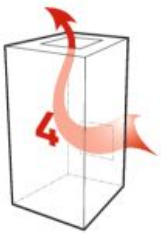

Rear return

Assembly 5

Return air below

5

RANGE

Units	CW	5	8	12	16		27					
	DXA	5	8	10	12	15	19	24	31	36	38	48
Nominal air flow rate (1)		1300	2000	2500	3000	4000	5000	6000	7000	8000	10000	12000
Associated CL2 condensation unit (2)		28	28	35	35	50	65	75	2x50	2x65	2x65	2x75

(1) Air flow adjustable via the controller.
(2) Two condensation units per close control unit for models 31 and 48.

QUICK SELECTION

EXPAIR CW

Units	CW 5	CW 8	CW 12	CW 16		CW 27	
Air flow rate (m^3/h)	1300	2000	2500	3000	4000	5000	6000
*Maximum operating pressure with G4 (COARSE 65%) or F7 (ePm1: 60%) filtration	400	400	259	400	85	400	324
Total/sensible cooling capacity (kW)	5 / 4.8	8 /7.6	10.5/ 9.9	14.7 / 13.2	18 / 16.7	23.5 / 21.5	27 / 25.1
Water flow rate (m^3/h)	0,86	1,4	1,8	2,5	3,1	4	4,6
Pressure drop (mWC) (Coil + valve)	4,3	4,9	5,1	4,7	10	4,1	5,2

Specifications: total cooling capacity, pure water 7°C/12°C, air 24°C 45%. Pressure drop with control valve.
Cooling capacity for a maximum ΔT in air of 12°C.
* Maximum operating pressure dependent on air flow rate. Take off approximately 20 Pa if there is a hot water coil on EXPAIR.
The operation point can be adjusted directly via the controller. All air flow/operating pressure combinations are therefore possible.

Correction factors	7/12°C	10/15 °C	12/18 °C
22 °C/45%	0,84	0,58	0,44
24 °C/45%	1	0,74	0,5
30 °C/35%	1,48	1,18	0,9

EXPAIR DXA

Units	DXA 5	DXA 8	DXA 10	DXA 12	DXA 15	DXA 19	DXA 24	DXA 31	DXA 36	DXA 38	DXA 48
Air flow rate (m^3/h)	1300	2000	2500	3000	4000	5000	6000	7000	8000	10000	12000
*Maximum operating pressure with G4 (COARSE 65%) or F7 (ePm1: 60%) filtration	400	400	276	400	89	400	324	273	26	330	21
Total/sensible cooling capacity (kW)	7.2 / 6	8 / 7.65	10.6 / 9.7	11 / 10.9	15 / 14.7	19 / 18.6	23.2 / 22.4	30.1 / 27.9	35 / 32	38 / 37.4	47 / 45.4

Specifications: total cooling capacity, air 24 °C 45%, 32 °C outdoor.
* Maximum operating pressure dependent on air flow rate. Take off approximately 20 Pa if there is a hot water coil on EXPAIR.
The operation point can be adjusted directly via the controller. All air flow/operating pressure combinations are therefore possible.

Correction factors	30 °C	32 °C	35 °C	40 °C
24 °C/50%	1,02	1	0,98	0,93
26 °C/50 %	1,06	1,04	1,02	0,98

Correction factors to apply to the cooling capacity based on the outdoor temperature and the return air conditions.

QUICK SELECTION

Hot water coil

Units	CW	5	8	12	16		27					
	DXA	5	8	10	12/15		19/24		31/36		38/48	
Air flow rate (m³/h)		1300	2000	2500	3000	4000	5000	6000	7000	8000	10000	12000
Heating capacity (kW)		4,5	6,2	7,5	11,9	13,7	17,8	19,5	25,8	27,6	37,5	40,9
Water flow rate (m³/h)		0,21	0,27	0,33	0,5	0,6	0,8	0,9	1,1	1,2	1,65	1,8
Pressure drop (mWC)		1,3	2,6	4,3	2,1	2,8	1	1,2	1,7	1,9	2,8	3,3

Specifications: heating capacity, air 20°C, pure water 80°C/60°C, pressure drop with control valve.
Correction factors to apply to the heating capacity for 90°C/70°C water temperature range: 1.23 and 45°C/35°C: 0.37.

2 stage or TRIAC electric heater, depending on the option selected

		CW 5	CW 8	CW 12	CW 16		CW 27					
		DXA 5	DXA 8	DXA 10	DXA 12	DXA 15	DXA 19	DXA 24	DXA 31	DXA 36	DXA 38	DXA 48
Total electrical power		3		6	9		12		18		24	
Electrical power (kW)	Stage 1	3			6		6		12		12	
	Stage 2	_	_	3	3		6		6		12	
Number of heaters	Stage 1	3 x 1 kW			3 x 2 kW		3 x 2 kW		3 x 4 kW		3 x 4 kW	
	Stage 2	_		3 x 1 kW	3 x 1 kW		3 x 2 kW		3 x 2 kW		3 x 4 kW	
Total current (A)		4,3		8,7	13		17,3		26		34,6	

DESCRIPTION

Casing

- Dual-wall construction.
- RAL 7035 grey precoated panel, removable:
  - 1 mm precoated exterior panels,
  - Glass wool, thickness 25 mm, class M0 (A2-s1),
  - 0.8 mm galvanised interior panels.

Filtration

- Filter cell efficiency COARSE 65% according to ISO16890 (G4 efficiency according to EN 779-2012).
- Optional filter efficiency ePM1: 60% according to ISO16890 (F7 efficiency according to EN 779-2012).
- Optional (except DXA 5/8/10 and CW 5/8/12) dual COARSE 65% + ePM1: 60% according to ISO16890 (G4 +F7 according to EN 779-2012).
- Filter cells tightly compressed against counter-frame by a gasket to ensure a completely leaktight seal.
- Fouling level monitored by an analogue pressure sensor.

Cooling coil cross-section

- Coil made of copper tubes, aluminium fins.
- Aluminium condensate drain pan.
- CW model with 2- or 3-way control valve fitted and connected. Optional thermally insulated flexible connections.
- DXA model with thermostatic expansion valve.

Ventilation section

- Direct drive centrifugal fan, associated with an electronically commutated (EC motor).

  EC motor: fan adaptation via manual adjustment or "self-regulating" adjustment by the controller, depending on the room load - system air control.
- EC electric motor 1-Ph/230 V/50-60 Hz, 4-pole, class F.
- Air flow rate monitored by an analogue pressure sensor.

Electrics box for the indoor unit

Electrical power and control box consisting of:

- Power supply: 3-Ph/400 V/50 Hz+E+N.
- Emergency stop master switch.
- Protected transformer (three-phase, 400/24 V).
- Protection and control of fan motor, and of humidifier and electric heater depending on options selected.
- CIAT µAIR CONNECT2 control systems using PLC.
- Return air dry-bulb temperature control.
- Return humidity control:
  - Supply humidity control (optional)
  - Dehumidification humidity control (optional)
- Options available: standard water leak detection, fire thermostat and supply air low limit monitoring.
- Remote control and fault summary contact.
- Condensate drain pump (optional).

Accessories (option)

- Support base for air supply via raised floor:
  - Bottom version 225 to 320 mm,
  - Top version 320 to 525 mm.
- Supply plenum.
- Acoustic plenum with sound trap.
- Motorised damper on intake section.
- Fire thermostat.
- Hydraulic connection kit (chilled water and hot water coils).
- Changeover thermostat (only for CW).

Description of the outdoor unit (DXA model)

- CL2 type air condensation unit.
- Power supply: 3-Ph/400 V/50 Hz+E+N.
- SCROLL hermetic compressor.
- HP and LP safety pressure switches.
- Shut-off and control valves.
- 1 refrigerant circuit.
- Refrigerant fluid: R410A.
- Condensation pressure control by electronic board and pressure sensor. Variable speed control on condenser fan.
- Fault signal on indoor unit.

Options

Electric heater

- Fan-controlled operation.
- 2-stage control (except 3 kW electric heater).
- 2-stage or TRIAC control.
- Two high-limit safety thermostats with automatic and manual reset.

Hot water coil

- 1-row coil made of copper tubes with aluminium fins.
- 2- or 4-way control valve, fitted and connected.
- Optional flexible connections.

Humidifier

- Humidifier with immersed electrodes and a CPY board to relay all information relating to the humidifier directly to the CIAT µAIR CONNECT2 PLC:
  - Stainless steel large surface area electrodes,
  - 3 kg steam per hour, for sizes CW5/8/12 and DXA5/8/10,
  - 8 kg steam per hour, for other sizes,
  - Steam cylinder in a single easy to remove component,
  - Filling solenoid valves,
  - Drain pump,
  - Electronics board for operation management,
  - Diffusion jet,
  - Water supply connection kit.
- Operates on municipal water supply only (water conductivity of between 350 and 1250 µS and hardness 15 to 30 °F). Do not use deionised or softened water.

Control

Unit control and monitoring

CIAT µAIR CONNECT2

- 160-character display showing the operating instructions, operating states, faults and solutions. Configurable controller.
- Two fault levels.
- Monitoring of operating times.
- RS 485 output with Jbus/ModBus RTU protocol.
- Master/slave type management possible. (Backup, rotation and additions between the units).
- On special request, BacNet gateway (IP or MSTP) or ModBus/JBus TCP/IP gateway.
- Optional changeover thermostat (only on CW).

ELECTRICAL DATA

Indoor unit (CW and DXA models)

		CW 5	CW 8	CW 12	CW 16	CW 27		
		DXA 5	DXA 8	DXA 10	DXA 12/15	DXA 19/24	DXA 31/36	DXA 38/48
Fan motor	Voltage (V)	230 V						
	Power (kW)	1,036			1,029	2,072	2,058	3,087
	Current (A)	4,51			4,38	9,02	8,76	13,14
Control circuit (transformer)	Voltage (V)	24 V						
	Current (A)	1						
Humidifier (option)	Voltage (V)	400						
	Power (kW)	2,25			6			
	Current (A)	3,2			8,7			
Electric heater (option)	Voltage (V)	400						
	Power (kW)	3		6	9	12	18	24
	Current (A)	4,3		8,7	13	17,3	26	34,6
Total current without option	Current (A)	5,51			5,38	10,2	9,76	14,14
	Disconnect switch rating (A)	16						
Total current with humidifier	Current (A)	8,71			14,08	18,72	18,46	22,84
	Disconnect switch rating (A)	16				25		
Total current with electric heater	Current (A)	9,81		14,21	18,38	27,32	35,76	48,74
	Disconnect switch rating (A)	16			25	40		63
Total current all options	Current (A)	13,01		17,41	27,08	36,02	44,46	57,44
	Disconnect switch rating (A)	16		25	40		63	

Outdoor unit : Condensation unit (CL2) (DXA model)

Units	5	8	10	12	15	19	24	31	36	38	48
Outdoor unit no./type	1x28	1x28	1x35	1x35	1x50	1x65	1x75	2x50	2x65	2x65	2x75
Power supply no./type	3-Ph/400V/50Hz+E+N							3-Ph/400V/50Hz+E+N			
Max. total current (A)	5	7,5	8,5	8,3	11,3	12,6	15,7	2x11.3	2x12.6	2x12.6	2x15.7

SOUND PRESSURE LEVEL

Indoor unit (CW and DXA models)

Units	CW	5	8	12	16		27					
	DXA	5	8	10	12/15		19/24		31/36		38/48	
Air flow rate (m³/h)		1300	2000	2500	3000	4000	5000	6000	7000	8000	10000	12000
Sound pressure level (dBA)		49	53	58	57	61	59	63	60	63	60	64

Sound pressure level of indoor unit (CW and DX) at 2 m in a free field, supply air connected, +/-3 dB.

Outdoor unit : Condensation unit (CL2) (DXA model)

DXA units	5	8	10	12	15	19	24	31	36	38	48
Models	28	28	35	35	50	65	75	2x50	2x65	2x65	2X75
Sound pressure level (dBA)	39	39	45	45	43	47	47	46	50	50	50

Sound pressure level of outdoor unit, at 5 m, 1.5 m from floor, in a free field, directivity 2 and +/-3 dB.

CONNECTIONS/WEIGHTS

Indoor unit

Units	Chilled water	CW 5	CW 8	CW 12	CW 16	CW 27		
	Direct expansion	DXA 5	DXA 8	DXA 10	DXA12/15	DXA19/24	DXA 31/36	DXA 38/48
Weight of indoor unit (kg)		115	120	125	280	310	375	480

Chilled water coil (CW)

Inlet/outlet connections	G ½"M	G ¾"M	G ¾"M	G¾" M	G 1"M	G 1"M	G 1" ¼ M
Condensate draining*	Ø 32 mm						

Direct expansion coil (DXA)

Intake pipe	G 5/8"M	G 5/8"M	G 3/4"M	G 7/8"M	G 7/8"M	G1"1/8 M	G1"1/8 M	G 2X7/8" M	G 2X7/8" M	G 2X1"1/8 M	G 2X1"1/8 M
Liquid pipes	1/2"	1/2"	1/2"	1/2"	1/2"	1/2"	1/2"	2x1/2"	2x1/2"	2x1/2"	2x1/2"
Condensate draining*	Ø 32 mm										

Hot water coil

Inlet/outlet connections	G ½"M	G ½"M	G ½"M	G ½"M	G ½"M	G ¾"M	G ¾"M	G ¾"M

Chilled water coil connections: inlet on threaded coupling and outlet on threaded control valve.
Condensate drain connection on smooth coupling.
* Drain connections if optional pump fitted: Diam. 6

Outdoor unit : Condensation unit (CL2)

Direct expansion units	DXA 5	DXA 8	DXA 10	DXA 12	DXA 15	DXA 19	DXA 24	DXA 31	DXA 36	DXA 38	DXA 48
Outdoor units no./type	1x28	1x28	1x35	1x35	1x50	1x65	1x75	2x50	2x65	2x65	2x75
Weight of outdoor unit (kg)	64	69	69	69	101	112	118	101	112	112	118

Refrigerant connections

Intake pipe	5/8"	5/8"	3/4"	3/4"	3/4"	7/8"	7/8"	2x3/4"	2x7/8"	2x7/8"	2x7/8"
Liquid pipes	3/8"	3/8"	3/8"	3/8"	3/8"	3/8"	1/2"	2x3/8"	2x3/8"	2x3/8"	2x1/2"
Condensate drain	Ø 32 mm										

Dimensions

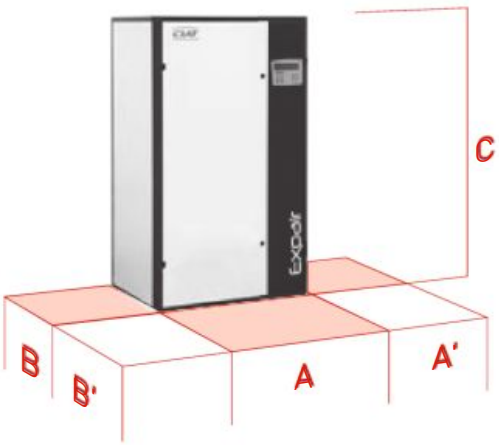

Indoor unit						
Units	Dimensions (mm)					Weight (kg)
	A	A'	B	B'	C	
CW5 DXA5	675	500	500	700	1700	115
CW8 DXA8	675	500	500	700	1700	120
CW12 DXA10	675	500	500	700	1700	125
CW16 DXA12/15	850	500	780	700	1900	280
CW27 DXA 19/24	1150	500	780	700	1900	310
DXA 31/36	1490	500	780	700	1900	375
DXA 38/48	1990	500	780	700	1900	480

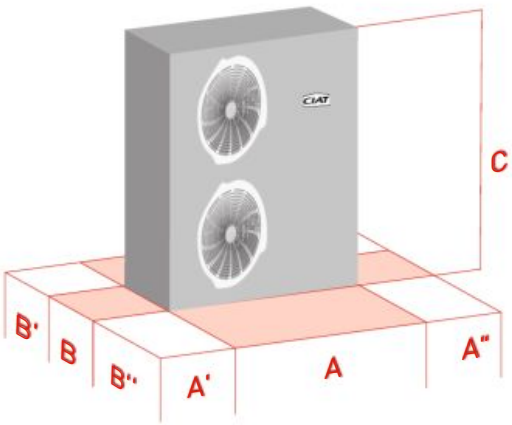

Outdoor unit (CL2)								
Models	Dimensions (mm)							Weight (kg)
	A	A'	A''	B	B'	B''	C	
28	1035	150	1000	450	150	1500	732	69
35	1035	150	1000	450	150	1500	732	69
50	1035	150	1000	450	150	1500	1332	101
65	1035	150	1000	450	150	1500	1332	112
75	1035	150	1000	450	150	1500	1332	118

Operating limits

Chilled water (CW)

Water circuit	Maximum pressure: PN16	Minimum water inlet temperature: 5 °C (consult us for other values)
		Maximum water inlet temperature: 80 °C (consult us for other values)
Indoor temperature		Minimum air inlet temperature: 12 °C, and according to return humidity
		Maximum air inlet temperature: 45 °C and according to return humidity (Weight in water, condensed < 0.8 g of water/kg of dry air)
Power supply		3PH / 400V + E + N

Direct expansion (DXA)

Indoor temperature		Minimum air inlet temperature: 18 °C, and according to return humidity
		Maximum air inlet temperature: 28 °C, and according to return humidity (Weight in water, condensed < 0.8 g of water/kg of dry air)
Outdoor temperature		Minimum air inlet temperature: -15 °C
		Maximum air inlet temperature: 45 °C
Power supply	Indoor unit	3PH / 400V + E + N
	Outdoor unit(s)	3PH / 400V + E + N

478

MAGISTER

Precision air handling cabinet

Wide range of chilled water systems

Compact** and **attractive design

Energy savings with EC motor

and self-adjusting control

Easy installation

Cooling capacity: *10 to 116 kW*

Air flow rate: *3000 to 27,500 m³/h*

Use

Close control unit specifically adapted to meet the needs of rooms with a high heat load or sensitive locations (data centres, computer rooms, autocom rooms, etc.).

The choice of technology used (self-adjusting control which adapts to the room loads, electronically commutated EC motor) can reduce the energy consumption. Thanks to its skilful design, the **MAGISTER** integrates seamlessly into its intended location.

Chilled water operation

■ Magister CW - Chilled water

Air handling cabinet supplied with chilled water.

The fan also has a ModBus card which allows faults and settings such as the actual power input, current, rotation speed, etc. to be transmitted.

5

479

Fitting UNDER

Air supply via raised floor

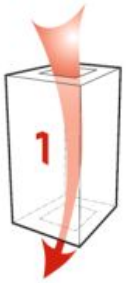

Fitting OVER

Return air on front panel
(except CW 115)

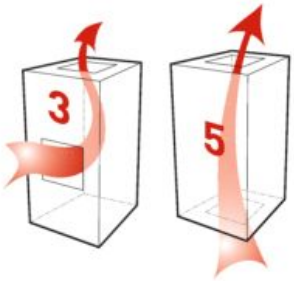

Return air below
(except CW 115)

QUICK SELECTION

CW range - Chilled water

Units	CW40	CW53	CW78	CW100	CW115
Air flow rate (m^3/h)	10 000	13 300	18 800	24 500	27 000
* Maximum operating pressure with G4 filtration /COARSE 65%	400	230	400	344	400
* Maximum operating pressure with F7 filtration /ePM1: 55%	400	141	400	261	400
Total/sensible cooling capacity (kW)	41.9 / 40	57.4/ 54	80.7 / 76	107 / 100	123 /113
Water flow rate (m^3/h)	7,2	9,8	14	18	21
Pressure drop (mWC) (Coil + valve)	6,4	9,6	8,1	7,1	10

Conditions: return air 24 °C 45% (RH)
Water temperature 7/12 °C

Units	CW40	CW53	CW78	CW100	CW115
Air flow rate (m^3/h)	13 300	13 300	20 500	27 000	27 500
* Maximum operating pressure with G4 filtration / COARSE 65%	175	237	400	124	400
* Maximum operating pressure with F7 filtration / ePM1: 55%	66	148	400	30	395
Total/sensible cooling capacity (kW)	46 / 46	51/ 51	78 / 78	100 / 100	124 / 124
Water flow rate (m^3/h)	7,9	8,8	13	17	21
Pressure drop (mWC) (Coil + valve)	7,5	7,7	7,5	6,2	10

Conditions: return air 26 °C 40% (RH)
Water temperature 10/15 °C

Units	CW40	CW53	CW78	CW100	CW115
Air flow rate (m^3/h)	13 300	13 300	20 500	27 000	27 500
* Maximum operating pressure with G4 filtration /COARSE 65%	174	236	400	123	400
* Maximum operating pressure with F7 filtration /ePM1: 55%	67	145	400	30	384
Total/sensible cooling capacity (kW)	56 / 56	60/ 60	94 / 94	132 / 132	124 /124
Water flow rate (m^3/h)	9,6	10	16	23	21
Pressure drop (mWC) (Coil + valve)	10	10	10	10	10

Conditions: return air 32 °C 35% (RH)
Water temperature 12/17 °C

* Maximum operating pressure dependent on air flow rate. If there is a heating coil present, see "heating coil" table.
The operation point can be adjusted directly via the controller. Hence all the air flow/operating pressure combinations are possible, with the values in the table above as the maximum values.

Options (available capacities)

Electric heaters

Units	CW			
	CW 40	CW 53	CW 78	CW 100/CW 115
Power (kW)	12	18	24	33,6
Total current (A)	17,3	26	34,7	48,6

Hot water support coil

Units	CW40		CW53	CW78		CW100	
Air flow rate (m^3/h)	10 000	13 300	13 300	18 800	20 500	24 500	26 000
* Maximum operating pressure with G4 filtration /COARSE 65%	400	135	200	400	400	295	170
* Maximum operating pressure with F7 filtration /ePM1: 55%	400	25	115	400	380	216	80
Heating capacity (kW)	36	40	44	63	66	71	73
Water flow rate (m^3/h)	1,5	1,7	1,9	2,7	2,8	3,1	3,1
Pressure drop (mWC) (Coil + valve)	2,2	2,6	2,8	5,3	5,8	6,6	6,9

Conditions: return air 17 °C 35% (RH)
Water temperature 80/60 °C
* Maximum operating pressure dependent on air flow rate.
The operation point can be adjusted directly via the controller. Hence all the air flow/operating pressure combinations are possible, with the values in the table above as the maximum values.

Humidifier

Model	CW 40 to CW115
Steam flow rate (kg/h)	8
Electrical power (kW)	6
Current (A)	8,7

Ventilation

Units	CW									
	CW 40		CW 53		CW 78		CW 100		CW115	
	Nominal	Maximum	Nominal	Maximum	Nominal	Maximum	Nominal	Maximum	Nominal	Maximum
Air flow rate (m^3/h)	10 000	13 300	13 300	13 300	18 800	20 500	24 500	27 000	27 000	27 500
* Maximum operating pressure with G4 filtration (COARSE 65% according to ISO16890)	400	171	229	229	400	400	343	157	400	400
* Maximum operating pressure with F7 filtration (COARSE ePM1 60% according to ISO16890)	400	60	140	140	400	400	261	68	400	385

Description

Casing

Dual-wall construction (with M0/A1 fire rating).

RAL 7035 and 7024 grey precoated removable panel.
- 0.8 mm painted precoated exterior panel.
- Mineral wool, 25 mm thick.
- 0.8 mm galvanised interior panel.

Filtration

Filter cells COARSE 65% efficiency according to ISO16890 (G4 efficiency according to EN 779-2012) or filter efficiency ePM1 60% according to ISO16890
(F7 efficiency according to EN 779-2012)

Filter cells kept compressed against the counter frame with the gasket directly on the filter cells.

Filter fouling value monitored by analogue sensor and displayed by the controller.

Cooling coil cross-section

Copper tubes, aluminium fins.

Stainless condensate drain pan.

Stainless coil flanges (option).

2-way or 3-way control valve fitted and connected.

Ventilation cross-section

Centrifugal plug fan, associated with an electronically commutated (EC motor).

EC motor: fan adaptation via manual adjustment or "self-regulating" adjustment by the controller, depending on the room load - system air control.

The fan* also has a ModBus card which allows faults and settings such as the actual power input, current, rotation speed, etc. to be transmitted * except CW115.

Electrics box

Power, command and control electrics box consisting of:
- Three-phase 400 V power supply + Earth.
- Main disconnect switch.
- Three-phase 400 V 50 Hz transformer with protection.
- Protection and control of all electrical components by a circuit breaker and contact switch.
- CIAT µAIR CONNECT2 control systems using PLC.
- Return air dry-bulb temperature control.
- Return humidity control, in supply or dehumidification mode.
- Water leak detection as standard.
- Remote control and fault summary contact.

Accessories (option)

Free cooling box.

Support sub-base for supply air via raised floor.

Cased sub-base with grille or damper.

Supply plenum.

Motorised damper on intake section.

Fire thermostat.

Supply air low limit sensor.

Raised floor pressure management.

Changeover thermostat.

Options

Electric heater

Fan-controlled operation.

Control by 2-stage operation or by progressive action (TRIAC).

High-limit safety thermostat with automatic and manual reset.

Hot water air coil

1-row coil made of copper tubes with aluminium fins.

2- or 4-way progressive action valve fitted, and connected.

Humidifier

Humidifier with immersed electrodes and a CPY board to relay all information relating to the humidifier directly to the CIAT µAIR CONNECT2 PLC
- Stainless steel large surface area electrodes.
- Flow rate of 8 kg/h, depending on the model.
- Steam cylinder in a single easy to remove component.
- Drain pump and filling solenoid valve.
- Electronics board for operation management.
- Diffusion duct.

Operates using municipal water supply only (water conductivity of between 350 and 1250 µS inclusive and hardness between 15 and 30°F). Do not use deionised or softened water.

Control system

Unit control and monitoring:

CIAT µAIR CONNECT2 PLC

- 160-character display showing the operating instructions, operating states, faults and solutions. Configurable controller.
- Two fault levels.
- Monitoring of operating times.
- RS 485 output with Jbus/ModBus RTU protocol.
- Master/slave type management possible. (Backup, rotation and additions between the units)
- On special request, BacNet gateway (IP or MSTP) or ModBus/JBus TCP/IP gateway
- Optional LON gateway
- Optional management of pressure in raised floor
- Optional changeover thermostat
- Bus management between the centrifugal plug fan and the µAIR CONNECT2 controller.
- Transmits fan faults and settings such as the actual power input, current, rotation speed, etc. to the controller.

Dimensions*

CW 40 - 53

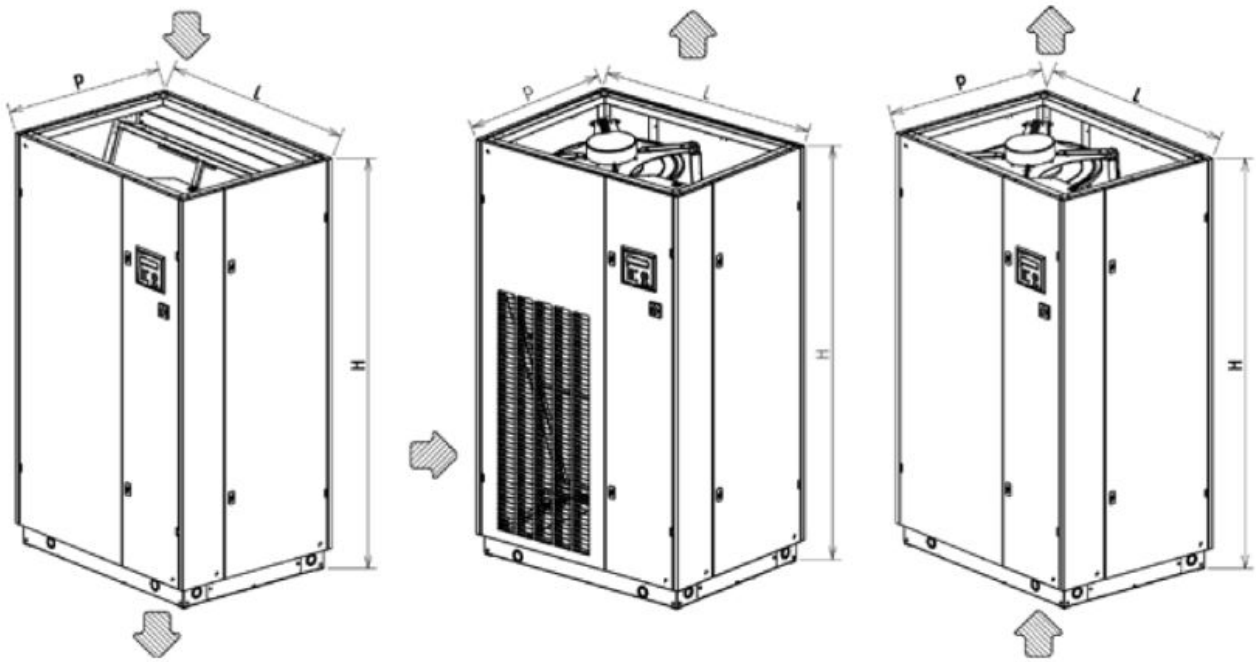

UNDER 1 OVER 3 OVER 5

CW	H	L	D
40	1990	1190	890
53		1520	

CW 78 - 100

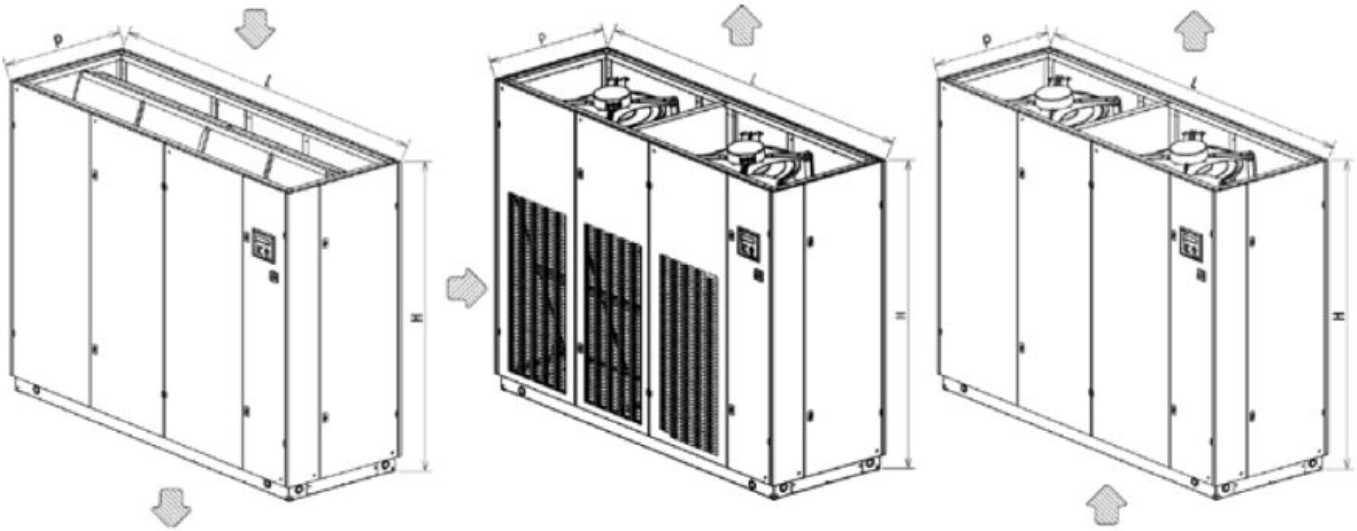

UNDER 1 OVER 3 OVER 5

CW	H	L	D
78	1990	2070	890
100		2620	
115		3000	

CW115

UNDER 1

* Necessary clearance on right-hand side (in front of the cabinet): 900 mm min.
Necessary clearance on front panel: 900 mm min.

WEIGHT

Chilled water (CW)

CW	40	53	78	100	115
Weight (kg)	350	385	545	635	730

JUNIOR BCP

Air a handling units for swimming pools

Models 70 / 80 / 90

Models 20 / 30 / 40 / 50 / 60

Heating and
dehumidification
of covered pools
***Low** consumption*
***High** energy efficiency*

Dehumidification capacity : 4 to 15 kg eau/h

Dehumidification

Air filtration

Heating

Condensation heat recovery

Free cooling

Description

JUNIOR BCP series units use a refrigerating circuit to dehumidify the air in covered pools and recover all the heat generated by the condensation process. They are designed primarily for conventional covered pools and other dehumidification applications.

These units are designed to be fitted inside a machine room.

Please consult us for special applications (salt water environments, high concentrations of salts or chemical products, high temperatures, etc.).

Range

JUNIOR BCP series: 1 refrigerating circuit, 1 compressor, 8 models:

- 20 / 30 / 40 / 50 / 60 / 70 / 80 / 90

Operating limits

Air inlet dry temperature

Maximum:	35ºC (65% RH - 29ºC WB)
Minimum:	18ºC (90% RH - 17ºC WB)

Condenser water inlet temperature

Maximum:	35ºC
Minimum:	20ºC

Principle diagrams

- JUNIOR BCP 20 / 30 / 40 / 50 / 60

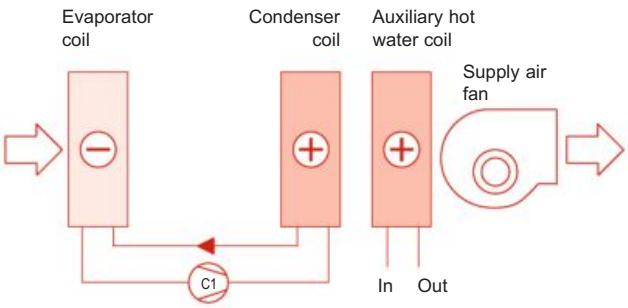

- JUNIOR BCP 70 / 80 / 90 (40 / 50 / 60 option)

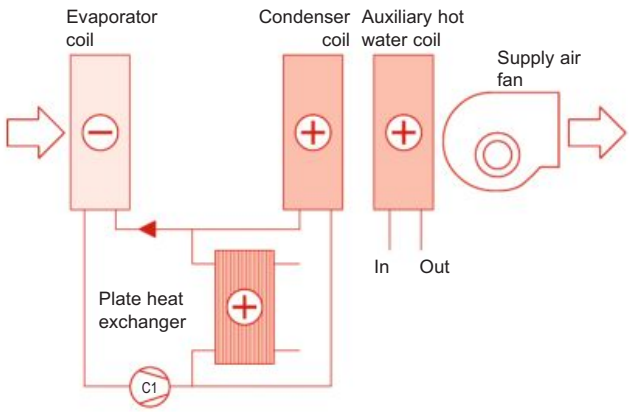

5

485

UNIT COMPONENTS

Standard equipment

- Casing made from 1 mm galvanised steel double-walled panelling, with polyester paint on both sides and 25 mm of fibreglass insulation sandwiched between them.
- Removable access panels and free-standing frame. Hinged door for access to the electrical cabinet.
- Panel with rubber gasket seals to ensure a tight fit.
- Sized to fit through door widths of 680 mm and over (removable mounts on models 40, 50 and 60).

Air circuit

- Reusable G3 filter with access for cleaning.
- Direct expansion cooling coil with copper tubing and aluminium blades, and protective polyurethane.
- Stainless steel condensate drain pan with drain port. This pan is tilted towards the drain so that no stagnant water builds up inside, to prevent health issues.
- Condensation coil with copper tubing and aluminium blades, and protective polyurethane.
- Galvanised sheet metal centrifugal fan with direct drive. Low-noise external motor rotor.
- Fan speed controlled via manual voltage adjustment potentiometer (models 20 to 60).
- Manually-adjusted bypass air damper.

Refrigerating circuit

- Scroll compressor with sound insulation, fitted on anti-vibration mounts. Features a complete protection module that provides combined protection for the motor temperature and the supply air temperature.
- Special SMO-254 steel plate heat exchanger with nickel welding, installed in parallel with the condensation coil. As standard on models 70, 80 and 90, and as an option on models 40, 50 and 60.
- Acid-resistant dehumidifier filter.

Security features

- High and low pressure switches.
- Main door switch.
- Thermal-magnetic protection for the compressor and fan motor power supply line.
- Automatic control circuit switch.
- Inlet limit temperature thermostat in the dehumidification coil.
- Compressor short-cycle protection timer.

Electrical cabinet

- Complete electrical cabinet, fully wired.
- Main earth connection.
- Compressor and fan motor assembly switches.

Standard control

- For the relative humidity: compressor operation controlled by a humidity sensor and an electromechanical controller for one stage.
- For the temperature (option): temperature sensor and an electromechanical controller that regulates the auxiliary hot water coil or electric heater, three-way proportional valve for hot water coil.

Options

- DUAL remote aerocondenser: makes it possible to select, based on needs for comfort, for the condensation to be done in the indoor air circuit or in the remote outdoor condenser.
- Coils with copper tubing and copper blades.
- 1 or 2 stage auxiliary electrical heater with built-in control.
- Antifreeze thermostat.
- Two-row auxiliary hot water coil and a three-way proportional valve and polyurethane or copper-copper coating.

  In free cooling mode, the antifreeze thermostat is compulsory for low outdoor air temperatures.
- Water condenser made from special SMO-254 steel with nickel welding (models 40 to 60).
- G4 filters.
- Fouled filter differential pressure switch.
- Discharge plenum (models 70 to 90).
- Free cooling mixing boxes, with motorised dampers and centrifugal return air fan, in a self-contained module. For the free-cooling control CIATpool electronic control is required
- Flexible connections for the water condenser and the auxiliary hot water coil.
- Rubber anti-vibration mounts.

CIATpool electronic control

CIATpool control is basically composed of a µPC MEDIUM control board, a pGD1 graphical terminal, a TCO user terminal (optional) and sensors.

The control can connect to a centralised technical management system through a BMS communication card

The control also manages a local connection between units through a pLAN (µPC MEDIUM Local Area Network), thus allowing for a maximum of 15 units to communicate data and information.

The electronic control CIATpool is supplied separate from the BCP unit in an airtight box (remote control panel).

Main functions:

- Dehumidifi cation control during operating modes: COOLING / HEATING / AUTO and selection of setpoints.
- Permanent control of the operating parameters.
- View of the values measured by the sensors.
- Daily and weekly programming.
- Anti-fire safety device.
- Operating fault diagnosis and main alarm.

Optional functions:

This control allows controlling optional elements such as:

- Outdoor air damper for refreshing air.
- Mixing box for thermal or thermoenthalpic free-cooling.
- Auxiliary electrical heaters.
- Hot water auxiliary coil.
- Air-cooled condenser for DUAL operation.
- Clogged filter detector

AVAILABLE CONFIGURATIONS

BCP - 20 / 30 / 40 / 50 / 60

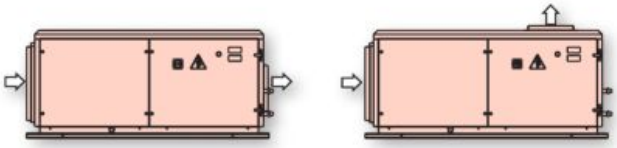

Horizontal supply (standard) — Top vertical supply (option)

BCP - 70 / 80 / 90

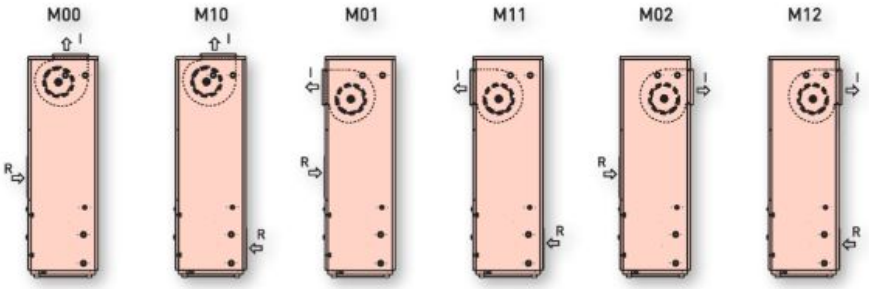

Air Inlet/Outlet
I = Supply air
R = Return

Description
Mxy
- Int. C. supply air: 0 = Standard, 1 = Option
- Int. C. air return: 0 = Standard, 1 = Option

Optional Free cooling (3 dampers with return air fan)

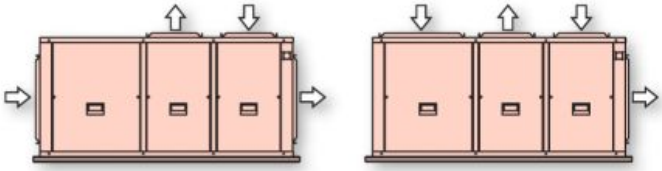

M0 ASSEMBLY rear return (standard) — M1 ASSEMBLY top return (option)

NOTE: the installer will have to connect the free cooling module to the machine.

Optional supply plenum: BCP - 70 / 80 / 90 (for direct air supply into the room)

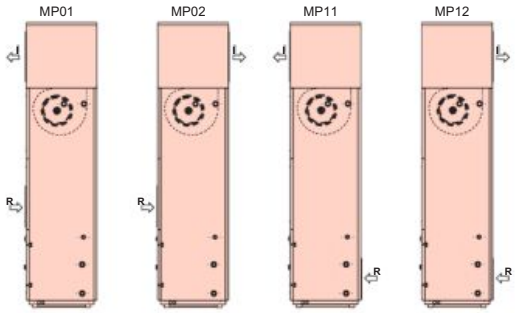

Entrée / Sortie Air
I = Soufflage
R = Reprise

SOUND LEVELS dB(A)

a) Sound power level

Sound power level at the supply air fan discharge and the return air fan intake (option), to be taken into account when calculating the silencer required.

b) Sound pressure level

Measurement conditions: in a free field, measured at a distance of 5 metres, directivity 2 and 1.5 metres from the ground.

Note: the sound pressure level depends on the installation conditions, and is therefore only given as a guide.

JUNIOR BCP		20	30	40M	40	50	60	70	80	90
a) Supply air fan	dB(A)	63	64	71	71	72	77,5	72	73,5	74,2
a) Return air fan (option)	dB(A)	70	71	66,6	66,6	67,3	73,7	77	67,8	68,2
b) Standard unit	dB(A)	45,4	46,1	50,7	50,2	51,4	56,3	52,9	54,0	56,6

TECHNICAL CHARACTERISTICS

JUNIOR BCP		20	30	40	50	60	70	80	90
Air circuit	Dehumidification capacity ❶ (kg/h)	3,9	5,1	7,1	8,7	10,7	12,6	14,3	15,2
	Heating capacity (kW)	7,2	9,4	13	16	19,8	11,3	12,8	13,9
	Cooling capacity ❷ (kW)	5,6	7,3	10,2	12,6	15,5	18,2	20,7	22
	Power input (kW)	2	2,5	3,4	4	4,9	6	6,7	7,3
	Nominal air flow rate (m^3/h)	1 200	1 500	2 100	2 600	3 200	3 700	4 300	4 600
	Maximum air flow rate (m^3/h)	1 440	1 800	2 520	3 120	3 840	4 440	5 160	5 520
	Available static pressure (mmWC)	15	15	15	15	15	17	15	13
	Fan type/Quantity	Centrifugal/1							
	Power (kW)	0,4	0,4	0,6	0,6	0,6	1,1	1,1	1,1
Water condenser	Availability	Non	Option				Standard		
	Heating capacity ❸ (kW)	--	--	6,6	8,2	10,1	11,8	13,5	14,3
	Nominal water flow rate (m^3/h)	--	--	1,2	1,4	1,8	2,1	2,4	2,7
	Pressure drop (mmWC)	--	--	1	1,3	1,9	1,1	1,4	1,7
	Hydraulic connections	--	--	1”	1”	1”	1 1/4”	1 1/4”	1 1/4”
Auxiliary hot water coil (optional)	Availability	Option							
	Heating capacity ❹ (kW)	15,4	16,5	18,5	21	23,6	35	39,7	41,1
	Nominal water flow rate (m^3/h)	0,8	0,9	1	1,1	1,2	1,8	2,1	2,1
	Pressure drop (mmWC)	1,7	2,4	0,6	0,7	0,9	1,6	1,9	2
	Hydraulic connections	3/4”	3/4”	1”	1”	1”	1 1/4”	1 1/4”	1 1/4”
Compressor	Type	Scroll							
	Number/Number of circuits	1 / 1							
	Oil volume (l)	1	1	1,1	1,4	1,7	1,7	1,7	3,3
Electrical power supply	230 V / I ph / 50 Hz	2 wires + earth			--				
	400 V / III ph / 50 Hz	--		3 wires + earth + neutral					
Max. input current	230 V / I ph / 50 Hz (±10%) (A)	17,1	21,6	30,6	--	--	--	--	--
	400 V / III ph / 50 Hz (±10%) (A)	--	--	15,6	17,6	20,6	18,6	21,6	21,6
Refrigerant	Type	R407C							
	Global warming potential (GWP) ❺	1,744							
	Charge (kg)	2,3	2,2	2,8	3,4	3	4,8	4,9	5,7
Dimensions	Length (mm)	1 430	1 430	1 530	1 530	1 530	1 082	1 082	1 082
	Width (mm)	658	658	838	838	838	680	680	680
	Height (mm)	636	636	700	700	700	2 143	2 143	2 143
Poids	(kg)	168	172	208	212	222	300	302	329
Evacuation des condensats Ø		3/4” connection							

❶ Dehumidification capacity of the refrigeration unit. When selecting the unit, the dehumidification required by the provision of outdoor air for ventilation purposes (UNE 100011) must be taken into account.
❷ Cooling capacity for air intake temperature conditions of 28°C and 65% RH
❸ Heating capacity for water in the recovery circuit: 28/33°C Recovery of 50% of the condensation capacity.
❹ Boiler water for the auxiliary hot water coil 82/65ºC and air intake at 20ºC.
❺ Global warming potential of one kilogram of a fluorinated greenhouse gas relative to one kilogram of carbon dioxide over a period of 100 years.

TECHNICAL CHARACTERISTICS OF THE SELF-CONTAINED RETURN MODULE (OPTION)

JUNIOR BCP		20	30	40	50	60	70	80	90
Return air fan (option)	Avail. static pressure (mmWC)	11	10	11	10	10	10	10	10
	Fan type/Quantity	Centrifugal/1							
	Fan power (kW)	0,1	0,1	0,5	0,5	0,5	0,5	0,6	0,6
Dimensions	Length (mm)	1 417	1 417	1 500	1 500	1 500	1 500	1 500	1 500
	Width (mm)	660	660	840	840	840	840	840	840
	Height (mm)	636	636	700	700	700	700	700	700
Weight	(kg)	90	90	139	139	139	139	140	140

Maximum currents (A)

JUNIOR BCP		20	30	40	50	60	70	80	90
Compressor	230 V / I ph / 50 Hz (±10%)	13,5	18	24	--	--	--	--	--
	400 V / III ph / 50 Hz (±10%)	--	--	9	11	14	14	17	17
Supply air fan	230 V / I ph / 50 Hz (±10%)	3,6	3,6	6,6	6,6	6,6	--	--	--
	400 V / III ph / 50 Hz (±10%)	--	--	--	--	--	4,6	4,6	4,6
Return air fan (option)	230 V / I ph / 50 Hz (±10%)	1,4	1,4	3,8	3,8	3,8	3,8	8,2	8,2

Auxiliary heater (option)

Available capacities

JUNIOR BCP	Voltage	230 V / I ph / 50Hz			
	Power (kW)	3	4	5	6
20 / 30 / 40M	Current (A)	13	17,4	21,7	26,1

JUNIOR BCP	Voltage	400 V / III ph / 50 Hz					
	Power (kW)	3	6	9	12	15	18
40	Current (A)	4,3	8,7	13	Not available		
50	Current (A)	4,3	8,7	13	17,3	Not available	
60	Current (A)	4,3	8,7	13	17,3	21,7	Not available
70 / 80 / 90	Current (A)	4,3	8,7	13	17,3	21,7	26,0

Reaction to corrosion

The plates exchangers of Junior BCP units (standard in models 70 to 90 and optional in models 40 to 60) are made up of SMO-254 stainless steel, and the material used for the plates welding is pure copper.
The attached table indicates the behaviour to corrosion for stainless steel SMO-254 with respect to different compositions of water. Values outside these ranges may suppose corrosion problems.
Important recommendations:

- If the pool water is introduced directly into the unit water condenser, the addition of chlorine should never be carried out before the inlet to this condenser.
- These exchangers should never be used in swimming pools with electrolysis efficiency treatment. In these cases it is necessary to install intermediate titanium exchanger, otherwise serious corrosion problems may occur.
- In the case of a longer standstill, leave the exchanger full of water pool without flowing or empty may cause corrosion problems. During periods of inactivity it is mandatory to fill up the hydraulic circuit of the exchanger completely with demineralised water. To isolate the hydraulic circuit of the rest of the installation, the installer must have shut-off valves at the input and output, and a drain for emptying.

Note: Consult “Assembly recommendations” included in the operating instructions manual.

Water content	Concentration (mg/l or ppm)	Time limits (analyze before)	SMO-254
Alkalinity (HCO_3^-)	< 70	Within 24h	+
	70 - 300		+
	> 300		+
Sulphate ❶ ($SO4^{2-}$)	< 70	No limit	+
	70 - 300		+
	> 300		+
HCO_3^- / SO_4^{2-}	> 1.0	No limit	+
	< 1.0		+
Electrical conductivity	< 10 S/cm	No limit	+
	10-500 S/cm		+
	> 500 S/cm		+
pH ❷	< 6.0	Within 24h	0
	6.0 - 7.5		+
	7.5 - 9.0		+
	> 9.0		+
Ammonium (NH_4^+)	< 2	Within 24h	+
	2 - 20		+
	> 20		+
Chlorides (Cl^-)	< 100	No limit	+
	100 - 200		+
	200 - 300		+
	> 300		

Legend :
+ Good resistance under normal conditions.
0 Corrosion problems may ocurr specially when more factors are value 0.
- Use is not recommended.

Water content	Concentration (mg/l or ppm)	Time limits (analyze before)	SMO-254
Free chlorine (Cl_2)	< 1	Within 5 horas	+
	1 - 5		0
	> 5		-
Hydrogen sulfide (H_2S)	< 0.05	No limit	+
	> 0.05		+
Free (aggressive) carbon dioxide (CO_2)	< 5	No limit	+
	5 - 20		+
	> 20		+
Total hardness (ºdH)	4.0 - 8.5	No limit	+
Nitrate ❶ (NO_3^-)	< 100	No limit	+
	> 100		+
Iron ❸ (Fe)	< 0.2	No limit	+
	> 0.2		+
Aluminium (Al)	< 0.2	No limit	+
	> 0.2		+
Manganese ❸ (Mn)	< 0.1	No limit	+
	> 0.1		

❶ Sulfates and nitrates works as inhibitors for piping corrosion caused by chlorides in pH neutral environments.
❷ In general, low pH (below 6) increases corrosion risk and high pH (above 7.5) decreases the corrosion risk.
❸ Fe3+ and Mn4+ are strong oxidants and may increase the risk for localised corrosion on stalinless steels.
SiO2 above 150 ppm increase the risk of scaling.

Options

JUNIOR BCP Dual version, please consult us (see the AQUAIR BCP model).

AQUAIR PREMIUM BCP

Air handling units for swimming pools

Electronic control
Optimised energy consumption
Scroll compressors and R-410A
Plug-fan with EC HEE motor
Heating and dehumidification of covered pools

Dehumidification capacity:
56 to 74 kg water/h

Dehumidification **Air filtration** **Heating** **Condensation heat recovery** **Free cooling** **Heat recovery**

Description

AQUAIR PREMIUM BCP are dehumidifi cation units by cooling circuit, with total condensing heat recovery, specially designed for conventional covered pools and other dehumidifi cation applications. These units have been designed for indoor or outdoor installation.

For outdoor installation (optional), these units add a hood at the new air intake.

Range

AQUAIR PREMIUM BCP: 2 refrigerating circuits, 2 compressors, 2 models:

- 270 / 360

Operating limits

Air inlet dry temperature

Maximum: 35ºC (65% RH - 29ºC WB)

Minimum: 18ºC (90% RH - 17ºC WB)

Condenser water inlet temperature

Maximum: 50ºC

Minimum: 20ºC

Principle diagrams

This unit consists of three stages of dehumidifi cation by means of three cooling circuits:

- One of the circuits condensates on a plates exchanger of SMO 254 steel, alloyed with chromium and molybdenum, with high resistance against corrosion in presence of chloride, filled with pool water, recovering part of the energy from the evaporation process.
- The other two circuits condensate on two air coils installed at the outlet of the evaporator, heating the cold and dry air that comes from it.
- It also integrates a cooling reversible circuit to recover the heat from the extraction air.

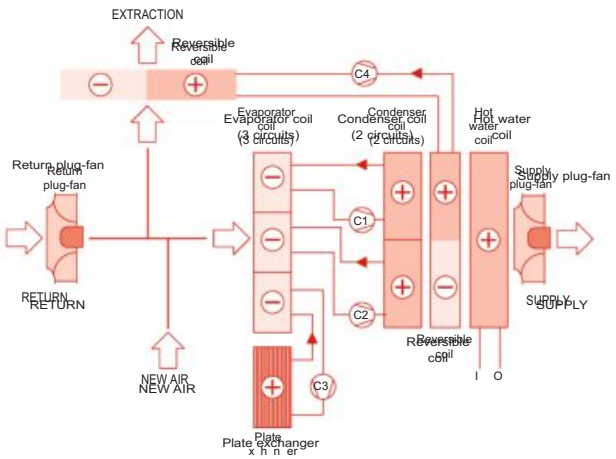

5

491

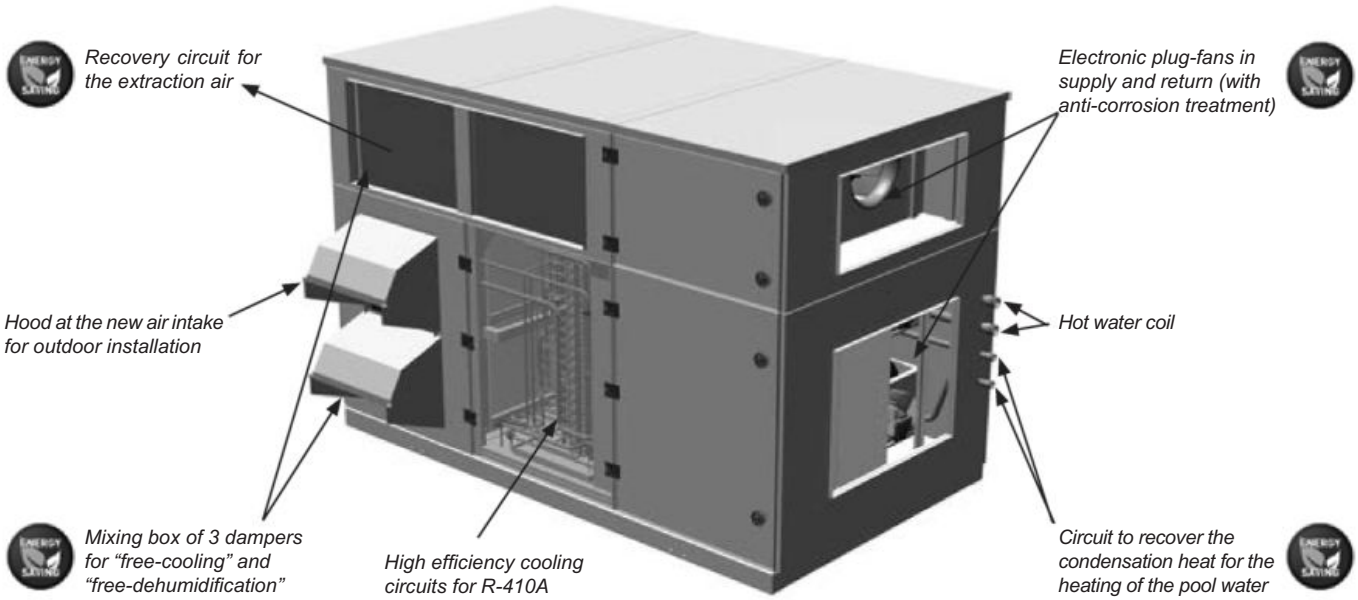

UNIT COMPONENTS

Casing

- Sandwich-panel casing made up in galvanized steel plate of 1 mm covered with polyester paint outside and inside, with glass fiber insulation of 25 mm.
- Support frame and hinged doors to access to the sections of the unit. Panels and doors with rubber joints to ensure tightness.

Indoor circuit

- Direct expansion cooling coil with copper tubes and aluminium fins, with polyurethane coating.
- Condenser coil with copper tubes and aluminium fins, with polyurethane coating.
- Stainless steel condensates drain pan with drainage outlet. This pan is inclinated towards the drainage outlet so that the water does not stagnate in the pan, avoiding sanitary problems.
- Electronic EC plug-fans directly coupled with variable speed and flow sensor. Anti-corrosion treatment.
- Mixing box of 3 dampers, with motorized dampers and return EC plug-fan directly coupled with variable speed and flow sensor.
- Reusable air filters, assembled on a frame.

Main cooling circuits

- Unit with three cooling circuits:
  - All circuits participate in the air dehumidification when evaporating on the 3 circuit coil.
  - One of the circuits is condensed over a special SMO-254 plate exchanger welded with copper, filled with pool water, recovering part of the energy from the evaporation process
  - The other two circuits condensate over two air coils located at the evaporator air outlet, heating the cold and dry air, before discharge over the optional hot water coil.
- Three hermetic scroll-type compressor, assembled over antivibration mounts, with thermal insulation and integral protection of the motor temperature.
- Thermostatic expansion valve with external equalization.
- Antiacid dryer filter.

Recovery circuit in the extraction air

This reversible circuit allows to recover the energy from the extractionair to heat the air in the pool.

- Hermetic scroll-type compressor with sound insulation, and integral protection of the motor temperature, assembled over antivibration mounts.
- Air circuit comprised of coils with copper pipes and aluminium fins, with polyurethane coating.
- Thermostatic expansion valve with external equalisation.
- Antiacid filter drier.
- Crankcase heater.
- Four-way cycle reversing valves.
- Liquid receiver and liquid sight glass.

Protections

- High pressure pressostat.
- Low pressure pressostat.
- Main door switch.
- Magnetothermic protection switches for the power line of compressors and fan motors.
- Automatic switch in the control circuit.
- Probe for mixing air temperature.

Electric panel

- Complete and fully wired electrical panel. Insulated panel cover to prevent condensation. Protection IP55.
- Main ground connection and power supply with neutral.
- Compressor and fan motor contacts.

CIATpool electronic control

CIATpool carries out a control of the dehumidification of the pool depending on temperature and humidity of the ambient air probe reading.

This control is basically comprised of a µPC MEDIUM control board, a pGD1 graphic terminal, a TCO user terminal (optional) and sensors.

A BMS card (optional) allows the connection to a centralised technical management system.

It also manages a local connection between units through a pLAN network (µPC MEDIUM Local Area Network), thus allowing communication of data and information for a maximum of 15 units.

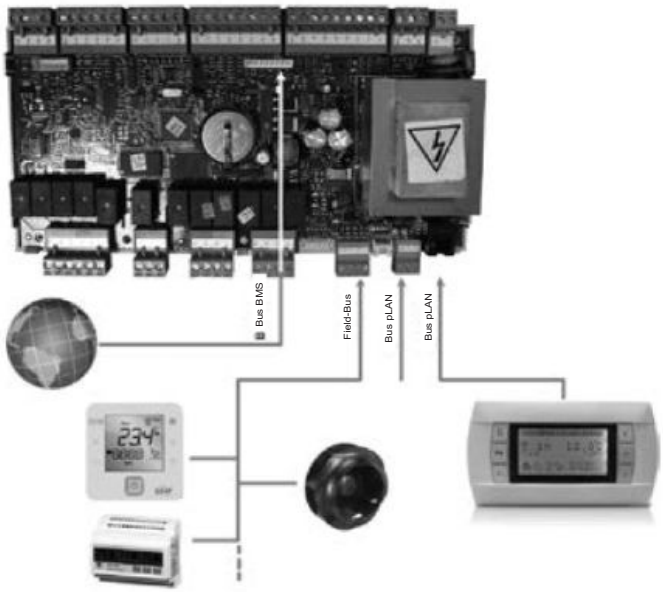

Main functions:

- Dehumidification control during operating modes: cooling / heating / AUTO
- Selection of setpoints.
- Temperature control (with optional hot water coil).
- Selection of control priorities.
- Timing of the compressors.
- Permanent control of the operating parameters.
- View of the values measured by the probes.
- Failure diagnosis and main alarm.
- Water circuit pump control.
- EC plug-fans control.
- Air flow control.
- Cooling recovery circuit control.

Optional functions:

- Free-dehumidification, free-cooling and regulation of the opening of the of the outdoor dampers.
- Proportional control of the hot water coil
- Clogged filter detection.
- Anti-fire safety.
- Connection to a centralised technical management system (BMS) for supervision.

pGD1 terminal:

This terminal, installed on the electric panel, allows:

- The initial programming of the unit and the modification of operating parameters.
- Unit ON / OFF.
- The selection of the operating mode and the setting of setpoints.
- On-screen display of controlled variables and sensor values measured.
- On-screen display of active alarms and historical record of alarms.

TCO user terminal (optional):

This terminal can be installed on the electric panel, instead of pGD1 terminal. In this case, the remote connection of the pGD1 terminal is posible.

Important: with this terminal, it is not possible the access to the parameters.

Options

Outdoor ambient

- INERA® coils with copper pipes and fins of an aluminium alloy, of high performance and great resistance to the corrosion.

Comfort / heating

- Hot water auxiliary coil of two or four rows, with a proportional three-way valve. Polyurethane coating or fins of INERA® aluminium alloy. This coil has an independent condensates drain pan.

Safety

- Differential pressostat for the detection of clogged filters.

Electric panel

- Energy meter for monitoring of the power consumption.
- Transformer for power supply without neutral (on request).

Comfort / indoor air quality options

- Gravimetric filters G4.
- Gravimetric filters G4 + opacimetric folded filters F6 to F9.
- Double stage folded opacimetric filters F6 + F8.

Installation

- Flexible hydraulic connections for water condenser and hot water coil.
- Antivibration mounts made of rubber.
- Hood at the new air intake for outdoor installation.

Control / communication

- Control with two ambient temperature and humidity probes.
- TCO user terminal, for installation on the electric panel, instead of pGD1 terminal.
- Kit remote control to 200 meters with pGD1 terminal (pGD1 terminal + 2 TCONN bypass cards). In this case it´s possible to install the TCO terminal on the electric panel.
- RS485 serial cards for network communication with protocols: Carel, Modbus, LonWorks®, BACnetTM MSTP, Konnex.
- Ethernet pCO Web card for network communication with protocols: Modbus TCP/IP, BACnetTM Ethernet, TCP/IP, SNMP V1-2-3, FTP and HTTP.

493

TECHNICAL CHARACTERISTICS

Aquair Premium BCP		270	360
Main circuits capacities + extraction air recovery	Dehumidification capacity ❶ (kg/h)	56.2	73.5
	Useful heating capacity in air / water ❷ (kW)	18,9 / 34,1	26,1 / 43,5
	Heating capacity of extraction air recovery (kW)	32.1	43.3
	Power input ❸ (kW)	20.6	27.6
	Useful thermodynamic efficiency	5.8	5.9
Air citcuit: supply fan	Nominal air flow (m^3/h)	15 900	24 000
	Available static pressure (mm.w.c)	25	25
	Type	EC Plug Fan	
	Number / Diameter (mm)	2 / 500	3 / 500
	Motor output (kW)	2 x 5,5	3 x 5,5
	Power input (kW)	4.6	6.9
	Maximum speed (r.p.m.)	2 x 2 220	3 x 2 220
Air circuit: Return fan	Nominal air flow (m^3/h)	15 900	24 000
	Available static pressure (mm.w.c)	15	15
	Type	EC Plug Fan	
	Number / Diameter (mm)	2 / 560	2 / 560
	Motor output (kW)	2 x 4,7	2 x 4,7
	Power input (kW)	2.38	3.74
	Maximum speed (r.p.m.)	2 x 1 763	2 x 1 763
Water condenser	Nominal water flow (m^3/h)	5.9	7.5
	Pressure drop (m.w.c.)	9.1	5.1
	Hydraulic connections	1 1/4" M	
Hot water coil (optional)	Heating capacity (2-row coil) ❹ (kW)	130.0	147.0
	Nominal water flow (m3/h)	6.6	7.4
	Pressure drop (m.w.c.)	2.0	2.6
	Hydraulic connections	2 1/8"	
Compressor	Type	Scroll	
	Number of compressors	4	
	No. circuits of air/water condensat. heat recovery	2 / 1	
	No. circuits of extraction air heat recovery	1	
	Oil type	Copeland 3MAF 32cST, Danfoss POE 160SZ, ICI Emkarate RL 32CF, Mobil EAL Artic 22CC	
	Oil volume (l)	4 x 2,5	4 x 3,3
Electrical characteristics	Mains voltage	400 V / III ph / 50 Hz (±10%)	
	Power supply	3 Wires + Ground + Neutral	
Maximum absorbed current	Compressors (A)	60.8	82.0
	Supply fan (A)	16.6	24.9
	Return fan (A)	14.6	14.6
	Control (A)	0.4	0.4
	Total (A)	92.4	121.9
Sound level	Sound pressure level ❺ dBA	62.5	63.5
Refrigerant	Type	R410A	
	Global warming potential (GWP) (GWP) ❻	2 088	
	Charge (kg)	C1 : 7,5 / C2 : 7,0 / C3 : 4,8 / C4 : 11,2	C1 : 7,8 / C2 : 7,3 / C3 : 5,5 / C4 : 12,2
	Environment impact (tCO2eq)	63.7	68.5
Weight	Length (mm)	3 389	
	Width (mm)	1 900	
	Height (mm)	2 267	
Poids	(kg)	2 220	2 270
Condensate outlet Ø		3/4" M gas threaded	

❶ Unit cooling dehumidification capacity. For unit selection, it should be taken into account the dehumidification which provides fresh air of ventilation (UNE 100011).
❷ Useful heating capacity in air / water. Air inlet temperature conditions of 28ºC and 65% RH (taking into account the contribution of condensation less the sensitive cooling capacity previously provided in the evaporator). Water recovery conditions of 28 / 33ºC.
❸ Total power input by compressors under nominal conditions
❹ Water from boiler for hot water coil 82 / 65ºC and air inlet at 20ºC.
❺ Measurement conditions: in a clear field, measured at a distance of 5 metres, directivity 2 and at 1,5 metres from the ground.
❻ Climate warming potential of one kg of greenhouse-effect fluored gas relative to one kilogram of carbon dioxide over a period of 100 years.

Hot water coil (optional)

Model	Air flow (m3/h)	Air inlet temperature (ºC)	Air relative humidity (%)	Water inlet temperature (ºC)	Water outlet temperature (ºC)	2-row			4-row		
						Heating capacity (kW)	Water flow (m3/h)	Water pressure drop (m.w.c.)	Heating capacity (kW)	Water flow (m3/h)	Water pressure drop (m.w.c.)
270	15900	20	60	82	65	129.9	6.6	2.0	193.6	9.8	1.2
		20	60	55	47	75.2	8.1	3.1	111.1	11.9	1.9
		28	65	82	65	107.6	5.4	1.4	161.2	8.1	0.9
		28	65	55	47	53.8	5.8	1.7	80.4	8.6	1.0
		35	50	82	65	88.5	4.5	1.0	133.6	6.8	0.6
		35	50	55	47	35.4	3.8	0.8	54.1	5.8	0.5
360	24000	20	60	82	65	146.9	7.4	2.6	225.9	11.4	1.6
		20	60	55	47	85.1	9.1	3.8	129.7	13.9	2.5
		28	65	82	65	121.7	6.2	1.8	187.9	9.5	1.6
		28	65	55	47	60.9	6.5	2.1	93.6	10.1	1.4
		35	50	82	65	100.1	5.1	1.3	155.5	7.9	0.8
		35	50	55	47	40.0	4.3	1.0	62.9	6.8	0.7

Air pressure drops

Model	Air flow (m3/h)	Pressure drop (mm.w.c.)					
		standard filter ❶	G4 filter	F6 filter	F8 filter	2-row water coil	4-row water coil
270	15900	5.2	11.7	16.8	22.3	2.5	5.0
360	24000	11.9	14.5	19.6	28.0	5.6	11.4

❶ Perte de charge incluse dans la machine standard, à soustraire en cas d'ajout du filtre G4 (en option).
Remarque : les pertes de charge dans les filtres ont été calculées pour un niveau d'encrassement moyen.

Water pressure drops

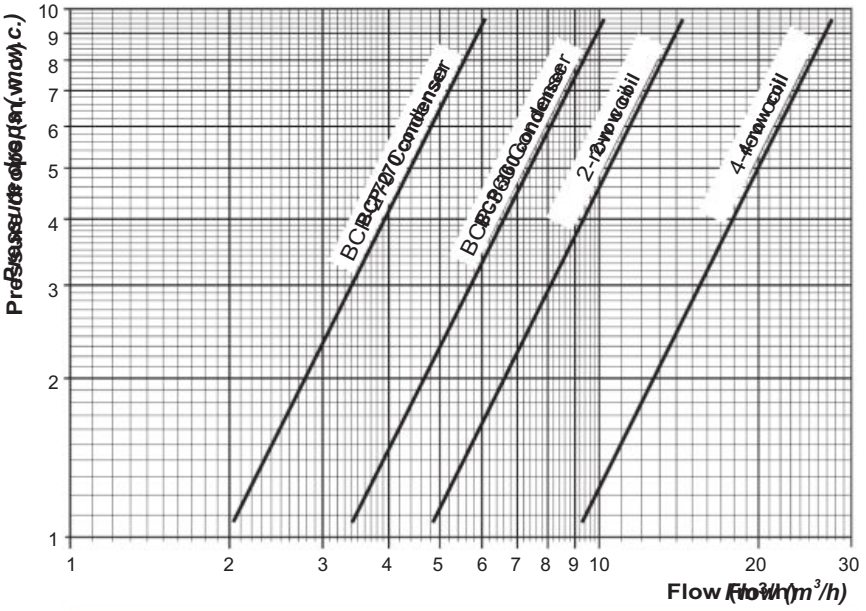

Note: hot water coil with water at 82 / 65ºC and air inlet at 20ºC

Reaction to corrosion

See detail info in AQUAIR BPC

AQUAIR BCP

Air handling units for swimming pools

Electronic control

Heating and

dehumidification

of covered pools

Low consumption

High energy efficiency

Dehumidification capacity: 22 to 74 kg water/h

Dehumidification

Air filtration

Heating

Condensation heat recovery

Free cooling

Description

AQUAIR BCP series units use a refrigerating circuit to dehumidify the air in covered pools and recover all the heat generated by the condensation process. They are designed primarily for conventional covered pools and other dehumidification applications.

These units are designed for installation inside a machine room; outdoor installation is available as an option.

Consult us for special applications (marine environments, high concentrations of salt or chemicals, high temperatures, etc.)

Range

AQUAIR BCP: 2 refrigerating circuits, 2 compressors, 5 models:

- 110 / 140 / 180 / 230 / 265

AQUAIR BCP: 3 refrigerating circuits, 3 compressors, 2 models:

- 315 / 355

Operating limits

Air inlet dry temperature

Maximum:	35ºC (65% RH - 29ºC WB)
Minimum:	18ºC (90% RH - 17ºC WB)

Condenser water inlet temperature

Maximum:	50ºC
Minimum:	20ºC

Principle diagrams

- AQUAIR BCP 110 / 140 / 180 / 230 / 265

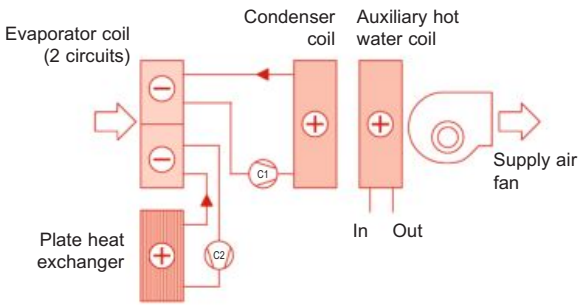

- AQUAIR BCP 315 / 355

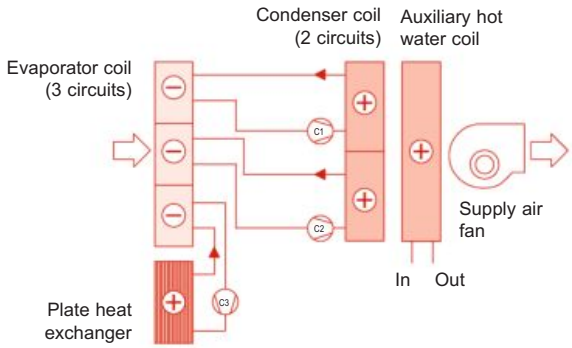

5

Unit components

Standard equipment

- Casing made from 1 mm galvanised steel double walls, with polyester paint on both sides and 25 mm of fibreglass insulation sandwiched between them.
- Free-standing frame and hinged doors for access to different sections of the unit. All panels and doors lined with rubber gaskets for airtight seal.

Indoor air circuit

- Reusable G3 filter fitted on a frame.
- Direct expansion cooling coil with copper tubes and aluminium blades, protected by a polyurethane coating.
- Condensation coil with copper tubes and aluminium blades protected by a polyurethane coating.
- Stainless steel condensate drain pan with drain port. This pan is tilted to prevent water stagnating and causing health issues.
- Galvanised metal belt-driven centrifugal fan, with direct drive.
- Manually-adjusted bypass air damper.

Refrigerating circuit

- Units equipped with two or three refrigerating circuits:
  - All the circuits help to dehumidify the air by means of evaporation over a coil with two or three circuits.
  - One of the circuits condenses on a plate heat exchanger made from special SMO-254 steel brazed with copper, supplied with pool water, thereby recovering some of the energy consumed during the evaporation process.
  - The other circuit or two other circuits condense, and thereby heat, the cold, dry air over an air-cooled coil placed downstream of the evaporator circuit before sending it on to the optional heating coil.
- Two or three hermetic scroll compressors (depending on the model) with sound insulation and integral motor temperature protection, fitted on anti-vibration mounts.
- Thermostatic expansion valve with external equaliser.
- Acid-resistant dehumidifier filter.

Security features

- High and low pressure switches.
- Main switch on electrical cabinet door.
- Magnetothermic protection switches for the compressor(s) and motorfan(s) power supply.
- Automatic control circuit switch.
- Inlet temperature limit thermostat on dehumidification coil.
- Double access door for fan.

Electrical cabinet

- Complete electrical cabinet, fully wired.
- Main earth connection.
- Compressor and fan motor assembly switches.

CIATpool electronic control

CIATpool control is basically composed of a µPC MEDIUM control board, a pGD1 graphical terminal, a TCO user terminal (optional) and sensors.

The control can connect to a centralised technical management system through a BMS communication cardThe control also manages a local connection between units through a pLAN (µPC MEDIUM Local Area Network), thus allowing for a maximum of 15 units to communicate data and information.

Main functions:

- Dehumidifi cation control during operating modes: COOLING / HEATING / AUTO and selection of setpoints.
- Permanent control of the operating parameters.
- View of the values measured by the sensors.
- Timing of the compressors.
- Daily and weekly programming.
- Anti-fi re safety device.
- Operating fault diagnosis and main alarm.

Optional functions:

This control allows controlling optional elements such as:

- Outdoor air damper for refreshing air.
- Mixing box for thermal or thermoenthalpic free-cooling.
- Auxiliary electrical heaters.
- Hot water auxiliary coil.
- Air-cooled condenser for DUAL operation.
- Management of the AERO version.
- Clogged filter detector.

Options

- AERO remote aerocondenser: replaces the water recovery circuit that condenses over the plate exchanger with an air split-system in which the condensation is done on the outside in a remote air condenser.
- DUAL remote aerocondenser: makes it possible to select, based on needs for comfort, for the condensation to be done in the indoor air circuit or in the remote outdoor condenser.
- Copper tubes and copper fi ns coils.
- 1 or 2 stages of auxiliary electrical heaters.
- 2-rows hot water coil with 3-ways proportional valve, with polyurethane coating or in copper-copper.
- High flow in discharge and return air (except for upper discharge and return).
- Clogged filter detector.
- G4 gravimetric filter and F7 opacimetric filter.
- Protection roof for outdoor installation.
- Protection roof for outdoor installation.
- Manual damper for outdoor air intake.
- Mixing box with two motorized dampers.
- Mixing box with three motorized dampers and centrifugal return fan.
- Flexible connections for water condenser and for hot water coil.
- Rubber antivibration mounts.

TECHNICAL CHARACTERISTICS

AQUAIR BCP		110	140	180	230	265	315	355
Air circuit	Dehumidification capacity ❶ (kg/h)	21,7	27,3	36,1	44,6	53,4	65,5	74,4
	Heating capacity (kW)	27,5	30,1	42,0	55,0	63,4	69,5	85,2
	Cooling capacity ❷ (kW)	31,6	39,7	53,3	67,3	77,1	95,2	108,2
	Power input ❸ (kW)	7,0	8,8	12,4	15,6	18,5	22,9	25,6
	Nominal air flow rate (m3/h)	5 500	7 000	9 000	11 500	13 250	16 000	16 000
	Maximum air flow rate (m3/h)	6 600	8 400	10 800	13 800	15 900	19 200	19 200
	Available static pressure ❼ (mmWC)	15	15	15	15	15	15	15
	Fan type/Quantity	Centrifugal/1						
	Power (kW)	1,1	1,5	2,2	3,0	4,0	5,5	5,5
High-flow air circuit (option)	Nominal air flow rate (m3/h)	10 500	10 500	17 250	17 250	24 000	24 000	24 000
	Available static pressure (mmWC)	15	15	15	15	15	15	15
	Fan type/Quantity	Centrifugal/1						
	Power (kW)	3,0	3,0	5,5	5,5	7,5	7,5	7,5
Water condenser	Heating capacity ❹ (kW)	10	16,9	20,7	24,9	28,2	43,1	43,1
	Nominal water flow rate (m3/h)	1,73	2,92	3,57	4,30	4,86	7,45	7,45
	Pressure drop (mmWC)	4,4	3,2	4,7	3,9	5,0	4,6	4,6
	Hydraulic connections	1"	1 1/4"	1 1/4"	1 1/2"	1 1/2"	1 1/2"	1 1/2"
Auxiliary hot water coil (optional)	Heating capacity ❺ (kW)	61,5	71,5	90,0	105,0	129,0	145,0	145,0
	Nominal water flow rate (m3/h)	3,2	3,7	4,7	5,5	6,7	7,5	7,5
	Pressure drop (mmWC)	2,3	3,1	1,4	1,8	2,1	2,6	2,6
	Hydraulic connections	1 1/4"	1 1/4"	1 1/2"	1 1/2"	1 1/2"	1 1/2"	1 1/2"
Compressor	Type	Scroll						
	No. of compressors /No. of stages	2					3	
	No. of air/recovery circuits	1 / 1					2 / 1	
	Oil volume (l)	1,7 / 1,0	3,3 / 1,4	3,3 / 1,7	4 / 1,7	6,2 / 1,7	3,3+1,7/3,3	3,3x2/ 3,3
Electrical power supply		3 Wires + Earth + Neutral						
Max. input current	400 V / III ph / 50 Hz (A)	37,7	31,6	48,0	55,9	61,0	86,6	98,6
Refrigerant	Type	R-407C						
	Global warming potential (GWP) ❻	1 652,5						
	Charge (kg)	7,4	8,6	14,7	15,5	17,8	16,9	18,2
Dimensions	Length (mm)	2 070	2 070	2 282	2 282	2 450	2 450	2 450
	Width (mm)	1 248	1 248	1 498	1 498	1 498	1 498	1 498
	Height (mm)	1 315	1 315	1 613	1 613	1 813	1 813	1 813
Weight	(kg)	630	665	895	920	1 080	1 155	1 175
Condensate drain diameter		3/4" tube						

❶ Dehumidification capacity of refrigeration system. When selecting a unit, take into account the moisture removal capacity of the outdoor air provided by the fan (UNE 100011).
❷ Cooling capacity for air inlet temperature conditions of 28°C and 65% RH.
❸ Total input power of the compressor and fan motor assemblies under rated conditions.
❹ Heating capacity for water in recovery circuit: 28/33ºC.
❺ Boiler water for the auxiliary hot water coil 82/65ºC and air intake at 20ºC.
❻ Global warming potential of one kilogram of a fluorinated greenhouse gas relative to one kilogram of carbon dioxide over a period of 100 years.
❼ For greater operating pressures, please consult us

499

Technical characteristics of the return air fan (option)

AQUAIR BCP	110	140	180	230	265	315	355
Nominal flow rate							
Available static pressure (mmWC)	10	10	10	10	10	10	10
Fan type/Quantity	Centrifugal/1						
Power (kW)	0,55	0,75	1,5	2,2	2,2	3	3
High flow rate (option)							
Available static pressure (mmWC)	10	10	10	10	10	10	10
Fan type/Quantity	Centrifugal/1						
Power (kW)	2,2	2,2	3,0	3,0	4,0	4,0	4,0

Weight per module (kg)

AQUAIR BCP	110	140	180	230	265	315	355
Nominal flow rate							
Standard unit (without options)	630	665	895	920	1080	1155	1175
Auxiliary hot water coil	40	40	45	45	55	55	55
Bag filter module	270	270	350	350	400	400	400
Mixing box module with 2 dampers	380	380	470	470	520	520	520
Mixing box module with 3 dampers + return vent.	438	444	602	609	697	700	700
High flow rate (option)							
Standard unit (without options)	645	675	975	995	1175	1230	1230
Auxiliary hot water coil	40	40	45	45	55	55	55
Bag filter module	270	270	350	350	400	400	400
Mixing box module with 2 dampers	380	380	470	470	520	520	520
Mixing box module with 3 dampers + return vent.	456	456	737	737	815	743	743

Maximum currents (A)

AQUAIR BCP		110	140	180	230	265	315	355
Compressor	400 V / 3 ph / 50 Hz	18 + 17	17 + 11	29 + 14	35 + 14	35 + 17	(29 x 2) + 17	29 x 3
Forced-draught fan	230 V / 3 ph / 50 Hz	4,7	6,1	8,7	11,9	15,5	20,1	20,1
	400 V / 3 ph / 50 Hz	2,7	3,6	5,0	6,9	9,0	11,6	11,6
High-speed supply air fan (option)	230 V / 3 ph / 50 Hz	11,9	11,9	20,1	20,1	-	-	-
	400 V / 3 ph / 50 Hz	6,9	6,9	11,6	11,6	14,7	14,7	14,7
Return air fan (option)	230 V / 3 ph / 50 Hz	2,8	3,6	6,1	8,7	8,7	11,9	11,9
	400 V / 3 ph / 50 Hz	1,6	2,1	3,6	5,0	5,0	6,9	6,9
High-speed supply air fan (option)	230 V / 3 ph / 50 Hz	8,9	8,9	11,9	11,9	15,5	15,5	15,5
	400 V / 3 ph / 50 Hz	5,0	5,0	6,9	6,9	9,0	9,0	9,0

SOUND LEVELS dB(A)

■ Sound power level

Sound power level at the supply air fan discharge and the return air fan intake (option), to be taken into account when calculating the silencer required:

AQUAIR BCP		110	140	180	230	265	315	355
Nominal flow rate								
Forced-draught fan	**dB(A)**	**75,0**	**77,8**	**81,3**	**85,9**	**87,2**	**91,1**	**91,1**
Return air fan (option)	**dB(A)**	**75,8**	**80,9**	**77,4**	**83,0**	**81,3**	**86,0**	**86,0**
High flow rate (option)								
Forced-draught fan	**dB(A)**	**86,3**	**86,3**	**85,5**	**85,5**	**85,7**	**85,3**	
Return air fan (option)	**dB(A)**	**80,7**	**80,7**	**80,7**	**80,7**	**83,2**	**83,2**	

■ Sound pressure level

Measurement conditions: in a free field, measured at a distance of 5 metres, directivity 2 and 1.5 metres from the ground.

AQUAIR BCP		110	140	180	230	265	315	355
Standard device	**dB(A)**	**63,2**	**66,9**	**69,8**	**73,6**	**74,8**	**77,7**	**77,6**

NOTE: the sound pressure level depends on the installation conditions and is only given as a guide.

AUXILIARY HEATER (OPTION)

Available capacities

Assembly inside unit.

Voltage	400 V / 3 ph / 50 Hz									
Power (kW)	**3**	**6**	**9**	**12**	**15**	**18**	**24**	**27**	**36**	**54**
Current (A)	**4,3**	**8,7**	**13,0**	**17,3**	**21,7**	**26,0**	**34,6**	**39,0**	**52,0**	**77,9**

REACTION TO CORROSION

The plates exchangers of Aquair BCP units are made up of SMO-254 stainless steel, and the material used for the plates welding is pure copper.
The attached table indicates the behaviour to corrosion for stainless steel SMO-254 with respect to different compositions of water. Values outside these ranges may suppose corrosion problems.

Important recommendations:

- If the pool water is introduced directly into the unit water condenser, the addition of chlorine should never be carried out before the inlet to this condenser.
- These exchangers should never be used in swimming pools with electrolysis efficiency treatment. In these cases it is necessary to install intermediate titanium exchanger, otherwise serious corrosion problems may occur.
- In the case of a longer standstill, leave the exchanger full of water pool without flowing or empty may cause corrosion problems. During periods of inactivity it is mandatory to fill up the hydraulic circuit of the exchanger completely with demineralised water. To isolate the hydraulic circuit of the rest of the installation, the installer must have shut-off valves at the input and output, and a drain for emptying.

Water content	Concentration (mg/l or ppm)	Time limits (analyze before)	SMO-254
Alkalinity (HCO_3^-)	< 70	Within 24h	+
	70 - 300		+
	> 300		+
Sulphate ❶ (SO_4^{2-})	< 70	No limit	+
	70 - 300		+
	> 300		+
HCO_3^- / SO_4^{2-}	> 1.0	No limit	+
	< 1.0		+
Electrical conductivity	< 10 S/cm	No limit	+
	10-500 S/cm		+
	> 500 S/cm		+
pH ❷	< 6.0	Within 24h	0
	6.0 - 7.5		+
	7.5 - 9.0		+
	> 9.0		+
Ammonium (NH_4^+)	< 2	Within 24h	+
	2 - 20		+
	> 20		+
Chlorures (Cl^-)	< 100	No limit	+
	100 - 200		+
	200 - 300		+
	> 300		

Légende:
+ Good resistance under normal conditions.
0 Corrosion problems may ocurr specially when more factors are value 0.
- Use is not recommended..

Water content	Concentration (mg/l or ppm)	Time limits (analyze before)	SMO-254
Free chlorine (Cl_2)	< 1	Within 5 horas	+
	1 - 5		0
	> 5		-
Hydrogen sulfide (H_2S)	< 0.05	No limit	+
	> 0.05		+
Free (aggressive) carbon dioxide (CO_2)	< 5	No limit	+
	5 - 20		+
	> 20		+
Total hardness (ºdH)	4.0 - 8.5	No limit	+
Nitrate ❶ (NO3-)	< 100	No limit	+
	> 100		+
Iron ❸ (Fe)	< 0.2	No limit	+
	> 0.2		+
Aluminium (Al)	< 0.2	No limit	+
	> 0.2		+
Manganese ❸ (Mn)	< 0.1	No limit	+
	> 0.1		+

❶ Sulfates and nitrates works as inhibitors for piping corrosion caused by chlorides in pH neutral environments.
❷ In general, low pH (below 6) increases corrosion risk and high pH (above 7.5) decreases the corrosion risk.
❸ Fe3+ and Mn4+ are strong oxidants and may increase the risk for localised corrosion on stalinless steels.
SiO_2 above 150 ppm increase the risk of scaling.

Dimensions

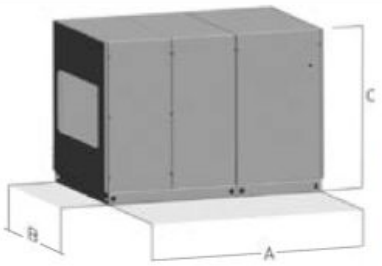

(5) For machines with free cooling or bag filter boxes, refer to the technical documentation for the dimensions

Model (5)	Dimensions (mm) A	B	C	Weight (kg)
BCP 110	2 070	1 248	1 315	630
BCP 140	2 070	1 248	1 315	665
BCP 180	2 282	1 498	1 613	895
BCP 230	2 282	1 498	1 613	920
BCP 265	2 450	1 498	1 813	1 080
BCP 315	2 450	1 498	1 813	1 155
BCP 355	2 450	1 498	1 813	1 175

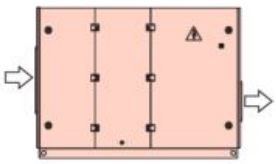

Lateral supply and return air

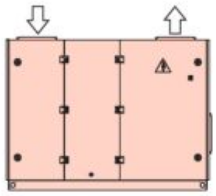

Top supply and return air

Remote condensation (option)

AQUAIR BCP AERO

This option replaces the recovery water circuit which condenses on the plate heat exchanger with a split air-cooled condenser where condensation takes place externally.

Solution for covered pool applications which do not need to recover any heat from the actual swimming pool.

The air-cooled condenser outdoor unit, mainly comprising one or more fans and a coil, can be selected with a centrifugal fan from series ASN and ASM, or with an axial flow fan from series ASJ and ASW.

Important: These air-cooled condenser units must incorporate the condensation pressure control option.

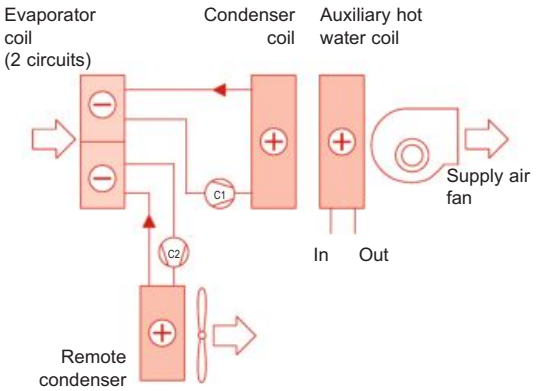

Model: AQUAIR BCP AERO	Air-cooled condenser model: Propeller fan		Centrifugal fan	
BCP 110	ASJ 45	-	ASN 45	-
BCP 140	ASJ 55	-	ASN 45	-
BCP 180	ASJ 70	-	ASN 65	-
BCP 230	ASJ 70	-	ASN 65	-
BCP 265	-	ASW 100	-	ASM 80
BCP 315	-	ASW 120	-	ASM 120
BCP 355	-	ASW 120	-	ASM 120

Remote condensation (option)

AQUAIR BCP DUAL

This option is used to select whether condensation takes place in the indoor air circuit or in the external condenser, depending on the comfort requirements.

For models with two air circuits, the high-capacity circuit is the one which can be switched with the air-cooled condenser. The condenser is switched using a manual switch.

The air-cooled condenser outdoor unit, mainly comprising one or more fans and a coil, can be selected with a centrifugal fan from the ASM series, or with an axial flow fan from the ASW series.

Important: These air-cooled condenser units must incorporate the condensation pressure control option.

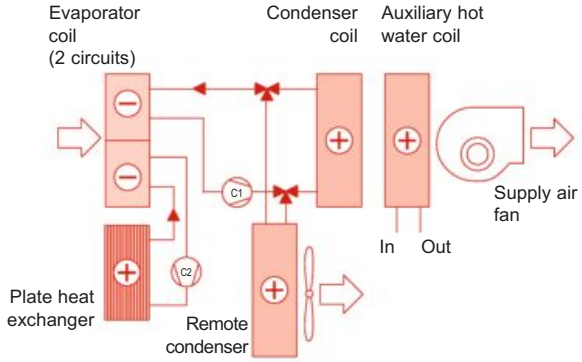

Model: AQUAIR BCP DUAL	Air-cooled condenser model: Propeller fan	Centrifugal fan
BCP 110	ASW 100	ASM 80
BCP 140	ASW 100	ASM 80
BCP 180	ASW 120	ASM 120
BCP 230	ASW 185	ASM 155
BCP 265	ASW 315	-
BCP 315	ASW 120	ASM 120
BCP 355	ASW 120	ASM 120

CIAT

ROOFTOP REVERSIBLE AIR-TO-AIR AND WATER-TO-AIR

ROOFTOP UNITS

VECTIOS™ PJ P.507
22.5 to 91.2kW | 20 to 90.1kW | 5 100 to 16 000 m³/h

SPACE PF P.537
93 to 281 kW | 99 to 293 kW | 14 400 to 50 600 m³/h

SPACE AQUA XF P.555
107 to 183 kW | 122 to 227 kW | 14 400 to 36 600 m³/h

AIR CONDENSED SPLIT AND PACKAGED SYSTEMS

ISPK P.565
19 to 115kW | 19 to 120kW | 4 000 to 21 000m³/h

SC P.577
20 to 135kW | 20 to 145kW

CZ P.589
20 to 135kW | 20 to 145kW | 4 000 to 24 000m³/h

WATER-SOURCED HEAT PUMPS

NEPTUS XP P.595
25 to 92 kW | 28 to 110 kW | 3 760 to 20 400 m³/h

CIAT SYSTEM CONTROL AND SUPERVISION

BOSS SUPERVISION P.603

PLANTWATCH PRO3 ..... P.607

Cooling | Heating | F = Air flow in m³/h

VECTIOS™ PJ

Compact air-air rooftop units

Integrated "plug&play" system
Eco-Design: high seasonal efficiency
Reliability with superior quality
Optimized dimensions and weights
Brand new intelligent control concept

Cooling capacity: 22,5 to 91,2 kW
Heating capacity: 22,0 to 90,1 kW

Cooling & heating | **Heating recovery** | **Air filtration** | **Free cooling** | **Dehumidification** | **R410A**

EUROVENT CERTIFIED PERFORMANCE www.eurovent-certification.com

Description

The **Vectios™ range** are compact, horizontal and autonomous air to air units, rooftop-type design. They are equipped with all the components required for the correct air conditioning to the installation.

- **RPJ series:** Units for **cooling** operation.
- **IPJ series:** Units for **reversible heat pump** operation.

The unit is connected directly to an air distribution ductwork without additional elements or equipment, pipes, cables, etc. taking up no floor space at all. This design reduces the cost of installation, facilities connections and ensures reliable operation.

The range of capacities of these units allows for the air conditioning of medium and large surface areas used for business or industry.

A vast number of options meet many operating requirements, such a:

- Recovery of the extracted air energy.
- Free-cooling.
- Air renewal.
- Indoor air quality control.
- Air filtration.
- Auxiliary devices for heating.
- Extension of operating limits for adaptation to extreme temperatures.

These units are equipped with electronic axial fans in the outdoor circuit, electronic plug-fans in the indoor circuit, air coils, hermetic scroll compressors and electronic control with microprocessor, optimized components for the refrigerant R-410A.

All of the units are tested and checked in the factory.

Range

Vectios™ PJ models	Dimensions: L x W x H (mm)
0090 - 0120	2.225 x 1.750 x 1.230
0140 - 0160 - 0180 - 0190	2.225 x 1.750 x 1.230
0200 - 0220 - 0240	3.000 x 2.200 x 1.230
0280 - 0320 - 0360 - 0380	3.650 x 2.200 x 1.230

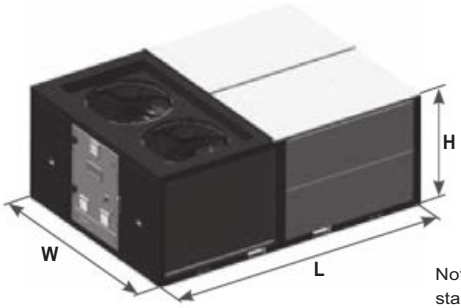

Note: Dimensions for the standard configuration.

Compliance

Machinery Directive 2006/42/EC (MD)
Electromagnetic Compatibility Directive 2014/30/EU (EMC)
Low Voltage Directive 2014/35/EU (LVD)
Pressure Equipment Directive 2014/68/EU (Category 2) (PED)
RoHS Directive 2011/65/EU (RoHS)
Eco-design Directive 2009/125/EC (ECO-DESIGN)
Energy Labelling Directive 2017/1369/EU (ECO-LABELLING)
Harmonised Standard: EN 378-2:2012 (Refrigerating systems and heat pumps - Safety and environmental requirements).

MODEL NUMBER NOMENCLATURE

IPJ_	0090	A	3	U	C0	AA	000	0	N	B	E	0	000	0000	0000	0	0	T100	00	P00	000	C100	0000	0000
1	2	3	4	5	6	7	8	9	10	11	12	13	14	15	16	17	18	19	20	21	22	23	24	25

Group 1: Unit type
- RPJ: air/air cooling units
- IPJ: air/air heat pump

Group 2: Unit model
- 1 circuit: 0090 / 0120 / 0140 / 0160 / 0180 / 0190
- 2 circuits: 200 / 0220 / 0240 / 0280 / 0320 / 0360 / 0380

Group 3: Version of the series

Group 4: Electrical power
- 3: 400V / 3ph + N / 50Hz
- 4: 400V / 3ph / 50Hz

Group 5: Type of refrigerant
- U: R410A

Group 6: Air flow + Assembly
- C0: Cross flow with standard assembly
- CS: Cross flow with 2 dampers
- CF: Cross flow 100% fresh air
- CK: Cross flow with 3 dampers
- CA: Cross flow with axial return fan
- CP: Cross flow with lower return plug-fan
- CR: Cross flow with lower return plug-fan and active recovery
- CQ: Cross flow with upper return plug-fan or centrifugal fan
- CT: Cross flow with upper return plug-fan or centrifugal fan and active recovery
- CW: Cross flow with passive recovery
- T0: Tunnel flow with standard assembly
- TS: Tunnel flow with 2 dampers
- TP: Tunnel flow with return plug-fan
- TW: Tunnel flow with passive recovery

Group 7: Coil coating : Outdoor - Indoor

AA — Outdoor coil - Indoor coil
- A: Aluminium — A: Aluminium
- B: Polyurethane — B: Polyurethane
- C: Inera® — C: Inera®
- D: Copper — D: Copper
- E: Blygold® — E: Blygold®

Group 8: Heating
- 000: Without auxiliary heating
- G0x: Gas burner, 3 power outputs: x = Low (L) / Nominal (N) / High (H)
- G1x: Boiler + hot water coil, 3 power outputs: Low (L) / Nominal (N) / High (H)
- E0x: Electrical heaters, 3 power outputs: Low (L) / Nominal (N) / High (H)
- B0x: Hot water coil , 2 options: x = Standard (S) / Great cold (C)

Group 9: Protection for low outdoor temperature
- 0: Without protection
- 1: Kit 1: Kit for outdoor temperature <-10ºC
- 2: Kit 2: Kit for outdoor temperature <-14ºC
- 3: Kit 3 : Kit 1 + Dampers with spring
- 4: Kit 4 : Kit 2 + Dampers with spring

Group 10: Available pressure of the indoor fan
- N: 3 available pressures Low (L) / Nominal (N) / High (H)

Group 11: Air filtration + stop-drop
- A: G4
- B: G4+ stop-drop
- C: G4 low pressure drop
- D: G4 low pressure drop + stop-drop
- E: G4 + M6
- F: G4 + M6 + stop-drop
- G: G4 + F7
- H: G4 + F7 + stop-drop
- I: G4 + F9
- J: G4 + F9 + stop-drop
- K: G4 l.p.d. + F7
- L: G4 l.p.d. + F7 + stop-drop
- M: G4 l.p.d. + F9
- N: G4 l.p.d. + F9 + stop-drop
- O: M6 + F7
- P: M6 + F7 + stop-drop
- Q: M6 + F9
- R: M6 + F9 + stop-drop
- S: F7 + F9
- T: F7 + F9 + stop-drop
- U: F9 + F9
- V: F9 + F9 + stop-drop

Group 12: Type of outdoor fan
- A: AC (2-speed)
- E: EC (electronic)

Group 13: Insulation
- 0: Standard insulation
- 1: Insulation Euroclass A2-s1, d0 (M0)

Group 14: Indoor unit configuration

000 — Without optional accessories
- A: Condensate drain pan in stainless steel
- 1: Overpressure management
- A: Clogged filters pressostat

Group 15: Outdoor unit configuration

0000 — Without optional accessories
- A: Fresh air intake protection grid
- 1: Outdoor coil protective grille
- A: Antivibration mounts
- 1: Stop-drop at the fresh air intake

Group 16: Passive recovery

0000 — Without optional accessories
- 1: Filters G4
- 2: Filters G4 low pressure drop
- 3: Filters G4 + M6
- A: Wheel speed with on/off control
- B: Wheel speed with variable control
- 1: Channel spacing of 2,0 mm
- 2: Channel spacing of 2,5 mm
- A: Material: Aluminium
- B: Material: Aluminium with epoxy
- C: Material: Hybrid wheel
- D: Material: aluminium with silicagel

Group 17: Extra heating
- 0: Without extra heating
- N: Preheater (electrical heater) in fresh air (N)
- L: Preheater (electrical heater) in fresh air (L)
- C: Heat recovery coil

Group 18: Special applications
- 0: Without special applications
- H: Active dehumidification condensation coil
- Z: Air zoning
- I: Low return temperature application
- K: Low T application + Air zoning
- M: Low T application + Active dehumidification
- N: 100% fresh air
- O: 100% fresh air + Air zoning

Group 19: Sensors

0000 — Without options
- H: Smoke detector sensor
- A: Air quality sensor for environment
- C: Air quality sensor duct-mounted
- P: Air quality sensor on the pLAN network
- 1: 1 sensor RS485
- 2: 2 sensors RS485
- 3: 3 sensors RS485
- 4: 4 sensors RS485
- 5: 1 sensor NTC
- T: Ambient temperature sensor
- H: Ambient temperature+humidity sensor
- P: Ambient sensor on the pLAN network

Group 20: Free-cooling + Outdoor humidity

00 — Without free-cooling + without sensor
- 1: Outdoor humidity sensor on the unit
- 2: Outdoor humidity sensor on pLAN network
- T: Thermal free-cooling
- M: Thermoenthalpic free-cooling
- E: Enthalpic free-cooling

Group 21: Terminal + Unit communication

000 — Without terminal + stand-alone + without card
- M: Communication card RS485 Modbus/Carel
- E: Communication card Ethernet PCoWeb
- L: Communication card RS485 LonWorks®
- B: Communication card Ethernet BACnet™
- C: Communication card RS485 BACnet™
- K: Communication card RS485 Konnex
- 0: Free-standing unit
- 1: Master unit
- 2: Slave unit
- P: VecticGD terminal in electrical cabinet
- T: TCO user terminal in electrical cabinet
- R: VecticGD terminal in electrical cabinet + TCO terminal remote up to 100 m
- S: TCO terminal in electrical cabinet + VecticGD terminal remote up to 200 m
- N: VecticGD terminal in electrical cabinet + VecticGD terminal remote up to 200 m

Group 22: Miscellaneous item 1

000 — Without options
- 1: Management of an on/off humidifier
- 2: Management of a proportional humidifier
- E: Energy meter
- M: Energy meter and calculation of cooling and heating capacities
- 1: Refrigerant leak detector

Group 23: Miscellaneous item 2

C100 — Electrical switchgear + std phase relay
- 1: Compressor soft starter
- T: Tropicalization
- 2: High performance phase monitoring relay
- A: High performance switchgear

Group 24: Centrifugal return fan

0000 — Without centrifugal return fan
- 1: Low flow + nominal pressure
- 2: Low flow + high pressure
- 3: Nominal flow + nominal pressure
- 4: Nominal flow + high pressure
- 5: High flow + nominal pressure
- 6: High flow + high pressure
- 7: Low flow + low pressure
- 8: Nominal flow + low pressure
- 9: High flow + low pressure
- Unused

Group 25: Indoor air direction

0000 — Lower direction
- 0: Lower supply and lower return
- 1: Lateral supply and lower return
- 2: Lower supply and lateral return
- 3: Lateral supply and lateral return
- Unused

Unit components

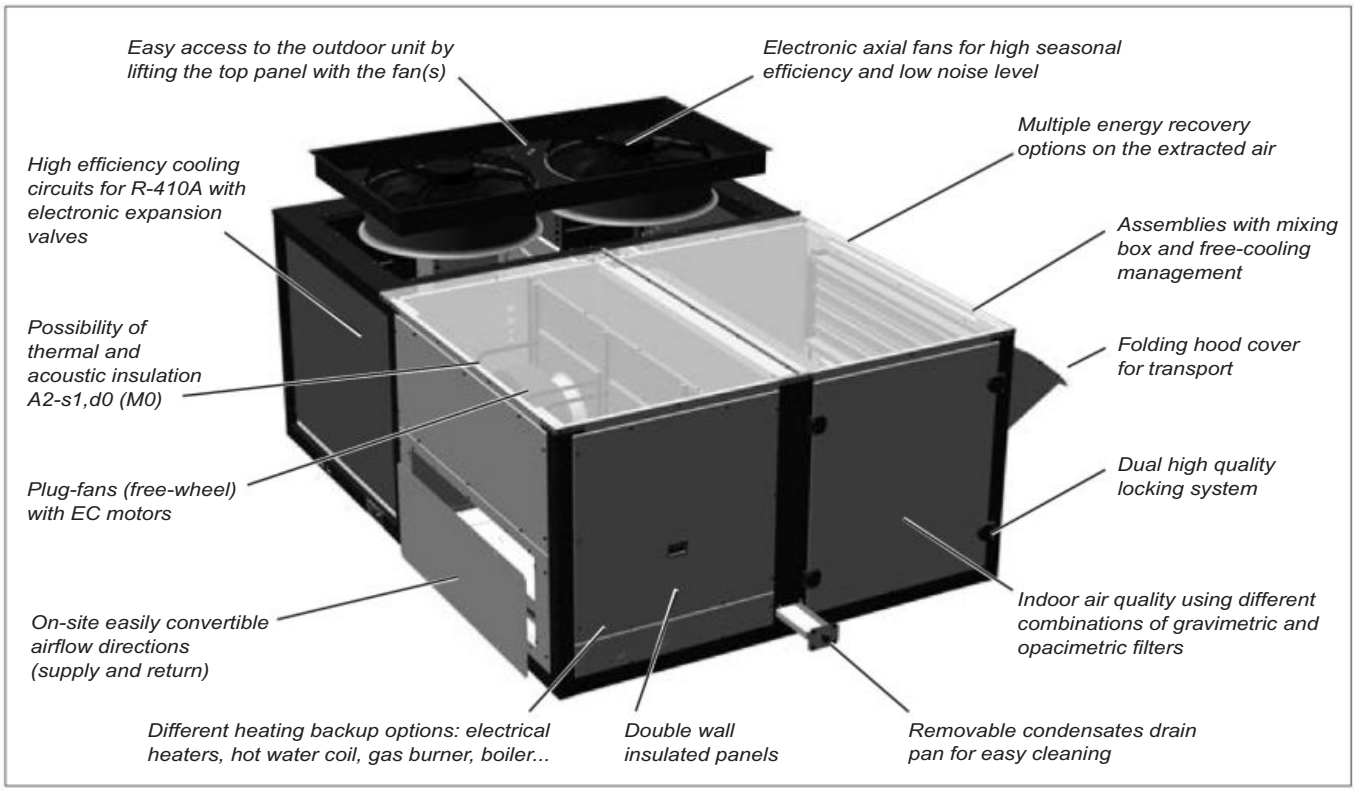

Casing

- Casing made of galvanised steel metal with polyester paint, white colour RAL 7035 and graphite grey colour RAL 7024.
- New self-supporting frame that allow the transport of two stacked units and without the need for a wooden pallet.
- Removable panels for easy access to all components: electrical cabinet, compressors, fans, filters, etc.

Outdoor unit

- Coil with copper pipes and aluminium fins.
- EC electronic axial fan(s) which adapt the rotation speed to the installation's requirements, thereby reducing electricity consumption, the sound level at partial charge and improving the unit's average seasonal efficiency.

  The cover with the motor fan(s) may be lifted to access the inside of the outdoor unit.

Indoor unit

- Thermal and acoustic insulation, in double wall panels and registers, with Euroclass A2-s1, d0 (M0) fire classification.
- Coil with copper pipes and aluminium fins.
- EC electronic supply plug-fans with variable control speed and flow rate controller.

  In tertiary sector installation, a high percentage of the annual air conditioning energy consumption comes from the use of fans for transporting air. Using fans which are more efficient has a direct impact on reducing consumption. Plug-fans with direct drive and variable speed offer the following advantages:
  - Elimination of friction losses during transmission thanks to the direct drive.
  - Greater aeraulic efficiency of the rotor (reactive blades with an optimized profile), running at very high operating pressures.
  - Greatly increased motor efficiency. Permanent magnets DC motors activated using electronic switching integrated into the motor itself.
  - Variable speed to ensure a constant supply air flow rate, independent of the filters clogging level.
  - Measuring the flow rate thought a calibrated section at the fan intake and a differential pressure sensor allows the control to handle the flow rate reliably and precisely in both on CAV and VAV systems.
- Reusable gravimetric air filters G4, mounted on a frame. Dual locking system mounted on the access panel to filters.
- Isolated pan of condensates drainage sloping down towards the drain. This pan is removable for easy cleaning.

Cooling circuit

- Hermetic scroll-type compressors in tandem design that improves the management of stages and the part load efficiencies. Sound insulation, assembled over antivibration mounts. Phase failure detection and correct phase sequency.
- Crankcase heater.
- Electronic expansion valve(s).
- Four-way cycle reversing valve(s) (heat pump units).
- Acid-resistant filter(s) dryer.
- Cooling design:
  - 1-air volume: IPJ models 0090 to 0190 and RPJ models.
  - 2-air volumes: IPJ models 0200 to 0380.

Protections

- High pressure pressostat(s).
- High and low pressure transducers.
- Compressor discharge temperature control.
- Main door switch.
- Protection for power lines of compressors with manual motor starters and power lines of fan motors with magnetothermic switches. These devices provide protection against overload, short circuit, phase failure and undervoltage.
- Automatic switch in the control circuit.

Electrical cabinet

- Complete and fully wired electrical cabinet. Insulated access door to prevent condensation. Forced ventilation of the electrical cabinet. Protection IP54.
- Numeration of wired and identification of components in the electrical cabinet. It permits easy tracing and diagnostics.
- Hinges + quarter-turn latches on the removable access door.
- Electrical power supply with neutral.
- Main ground connection.
- Compressor and fan motor contacts.

Vectic electronic control

The Vectic control consist of a control board, sensors, a graphic terminal, an user terminal (optional).

This system uses a RS485 field-bus to manage additional components.

A BMS card (optional) allows the control board to be connected to a centralised technical management system.

It also manages a local connection between units through a pLAN network (Vectic Local Area Network), allowing data and information to be exchanged between units, for a maximum of 15 units.

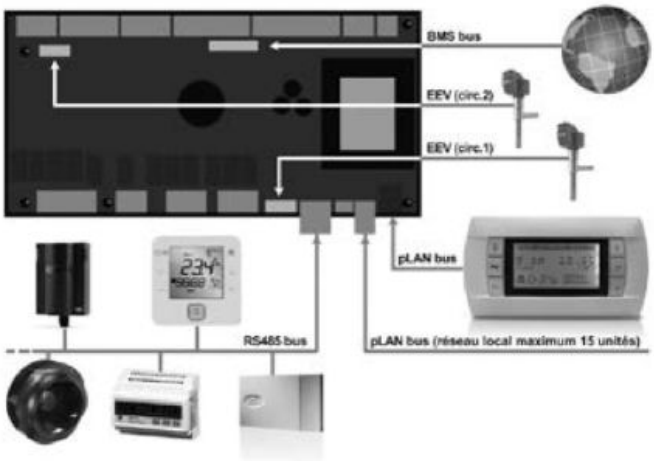

Main functions:

- Selection of setpoint and operating mode: HEATING / COOLING / AUTO / VENTILATION.
- Continuous control of the operating parameters.
- Display of the values measured by the sensors.
- Compressors time delays.
- Defrosting management (heat pump units).
- Control of the supply air temperature.
- All-seasons operation via the condensation and evaporation pressure control.

  The management of the unit in cooling mode is based on the principle of a high floating pressure. The condensation pressure setpoint is continually calculated depending on the outdoor temperature. This pressure is regulated by adjusting the air flow on the oudoor fans.
- Setpoint compensation based on the outdoor temperature.
- Hourly and weekly schedule.
- Fire protection.
- Diagnosis of faults and general alarm.

Optional functions:

This control is used to manage addition components such as:

- External air damper for the renewal of fresh air, depending on the temperature of the mixed air or depending on the air quality sensor.
- Mixing box for thermal, enthalpic or thermoenthalpic free-cooling.
- Cooling circuit for the recovery of the extracted air energy.
- Rotary heat exchanger, with proportional or on/off control.
- Auxiliary electrical heaters: two-stage with on/off control or single-stage with proportional control.
- Hot water coil with 3-way valve, with proportional or on/off control.
- Gas burner with proportional control.
- Gas boiler with proportional control.
- Heat recovery coil with 3-way valve, with proportional control.
- Humidifier with proportional or on/off control.
- Basic dehumidification.
- Active dehumidification with condensation coil.
- Clogged filter pressostat.
- Smoke detection station.
- Refrigerant leak detector.
- Air quality sensor for measuring CO_2.
- Energy meter and calculation of the cooling and heating capacities.
- Zoning up to 4 zones with variation of air flow by sending the control signal to the damper of each zone.
- Management of the low return temperature application.

VecticGD graphic terminal:

This terminal, fitted as standard on the electrical cabinet, is very easy to use. It provides detailed explanations of control in easy to understand English. No decoding is required.

Only 6, large, easy-to-use buttons are required to maneuver through the entire menus.

This terminal is used to:

- Carry out initial programming of the unit.
- Modify operating parameters.
- Switch the unit ON / OFF.
- Select the operating mode and adjust the setpoints.
- Display the variables controlled and sensor values measured.
- Display the current alarms and their historical record.

TCO user terminal (optional):

This terminal can be installed on the electrical cabinet, instead of the VecticGD graphic terminal. In this case, the remote connection of the VecticGD terminal is possible. Please consult the chapter “Options”.

This terminal is used to:

- Switch the unit ON / OFF.
- Select the operating mode and adjust the setpoints.
- Display the installation’s temperatures and humidity, outdoor temperature, supply air temperature, CO_2 sensor and opening of the outdoor damper.
- Display alarms codes.

FACTORY OPTIONS AND ACCESSORIES

Family	Group	Description	Models	Installation in factory	Installation on site
Electrical power	4	400 V / 3 ph / 50 (without neutral)	All	✔	
Air flow + Assembly	6	CS: Cross flow with 2 dampers	All	✔	
		CK: Cross flow with 3 dampers	All	✔	
		CF: Cross flow 100% fresh air	All	✔	
		CA: Cross flow with axial return fan	All	✔	
		CP: Cross flow with lower return plug-fan	All	✔	
		CR: Cross flow with lower return plug-fan and cooling recovery circuit (active recovery)	All	✔	
		CQ: Cross flow with upper return plug-fan or centrifugal fan	All	✔	
		CT: Cross flow with upper return plug-fan or centrifugal fan and cooling recovery circuit (active recovery)	All	✔	
		CW: Cross flow with rotary heat exchanger (passive recovery)	All	✔	
		TS: Tunnel flow with 2 dampers	0200 to 0380	✔	
		TP: Tunnel flow with return plug-fan	0200 to 0380	✔	
		TW: Tunnel flow with rotary heat exchanger (passive recovery)	0200 to 0380	✔	
Coil coating	7	Coil with copper pipes and copper fins	All	✔	
		Coil with copper pipes and fins of an aluminium alloy (INERA®)	All	✔	
		Coil with copper pipes and aluminium fins with polyurethane coating	All	✔	
		Blygold® coating	All	✔	
Heating	8	Auxiliary hot water coil : Standard or Great cold	All	✔	
		Auxiliary electrical heaters	All	✔	
		Natural or propane gas burner (supplied installed into a pre-assembly roofcurb)	All		✔
		Gas boiler + Auxiliary hot water coil	All	✔ (*)	
Protection low temperature	9	Kit 1: Antifreeze protection kit for low temperature (<-10ºC)	All	✔	
		Kit 2: Antifreeze protection kit for low temperature (<-14ºC)	All	✔	
		Kit 3: Kit 1 + Dampers with spring	All	✔	
		Kit 4: Kit 2 + Dampers with spring	All	✔	
Indoor fan	10	Indoor plug-fan with high available pressure or low available pressure	All	✔	
Air filtration + stop-drop	11	Stop-drop in the indoor air coil	All	✔	✔
		Gravimetric filters G4 with low pressure drop	All	✔	✔
		Gravimetric filters G4 + folded opacimetric filters M6, F7 or F9	All	✔	✔
		Gravimetric filters G4 low pressure drop + folded opacimetric filters F7 or F9	All	✔	✔
		Double stage of folded opacimetric filters (M6+F7, M6+F9, F7+F9 or F9+F9)	All	✔	✔
Outdoor fan	12	Axial 2-speed outdoor fan(s) directly coupled to the motor	All	✔	
Insulation	13	Ceramic fibre for thermal and acoustic insulation, Euroclass A2-s1, d0 (M0)	All	✔	
Indoor unit	14	Condensate drain pan in stainless steel	All	✔	✔
		Management of the overpressure	All	✔	
		Differential pressure switch to detect clogged filters	All	✔	
Outdoor unit	15	Fresh air intake protection grid	All	✔	✔
		Outdoor coil protective grille	All	✔	✔
		Stop-drop at the fresh air intake	All	✔	✔
		Antivibration mounts made of rubber	All	✔	✔
Passive recov.	16	Rotary heat exchanger with CW and TW assemblies	All	✔	
Extra heating	17	Heat recovery coil	All	✔	
		Preheater (electrical heater) in fresh air, low or nominal power	All		✔
Special applications	18	Active dehumidification with condensation coil	All	✔	
		Air zoning	All	✔	
		Low return temperature application	All	✔	
		Low return temperature application + Air zoning	All	✔	
		Low return temperature application + Active dehumidification	All	✔	
		100% fresh air (without or with air zoning)	All	✔	
Sensors	19	Ambient temperature sensor: one NTC sensor connected to the control board or 1 to 4 RS485 sensors	All	✔	✔
		Ambient temperatute + humidity sensor: one to four sensors with RS485 communication	All	✔	✔
		CO_2 air quality sensor environment installed, duct-mounted or installed on a pLAN local network	All	✔	✔
		Smoke detecting station in accordance with the NF S 61-961 standard	All	✔	✔
Free-cooling + Outd. humidity	20	Type of free-cooling: thermal, enthalpic or thermoenthalpic	All	✔	✔
		Outdoor air humidity sensor: supplied with the unit or installed on a pLAN local network	All	✔	✔
Terminal + Unit communication	21	TCO terminal installed in the electrical cabinet	All	✔	✔
		VecticGD terminal installed in the electrical cabinet + TCO terminal remote up to 100m	All	✔	✔
		TCO terminal installed in the electrical cabinet + VecticGD terminal remote up to 200m	All	✔	✔
		VecticGD terminal installed in the electrical cabinet + VecticGD terminal remote up to 200m	All	✔	✔
		Unit configuration: stand-alone, master or slave	All	✔	✔
		Communication cards: RS485 Modbus/Carel; Ethernet PCoWeb; RS485 LonWorks®; Ethernet BACnet™; RS485 BACnet™; RS485 Konnex	All	✔	✔
Miscellaneous item 1	22	Management of an humidifier with proportional or on/off control	All	✔	
		Energy meter	All	✔	
		Energy meter and calculation of the cooling and heating capacities	All	✔	
		Refrigerant leak detector	All	✔	
Miscellaneous item 2	23	Compressor soft starter	All	✔	
		Tropicalised components on the electrical cabinet: control board, cards and terminals	All	✔	
		High performance phase monitoring relay	All	✔	
		High performance magnetothermic switches	All	✔	
Return fan	24	Centrifugal return fan (CQ and CT assemblies). 9 combinations of air flow and available pressure	All	✔	
Air direction	25	0: Lower supply and lower return; 1: Lateral supply and lower return 2: Lower supply and lateral return; 3: Lateral supply and lateral return	All	✔	
Roofcurb	--	Standardised pre-assembly roofcurbs with adjustable height	Cross flow		✔
		Adaptation roofcurbs for replacing units on site	Tunnel flow		✔

(*) Part of this option must be intalled on-site.

Assembly (Group 6) + Indoor air direction (Group 25)

Assembly	Description	Air flow	Models	Indoor air direction			
				0 Lower supply Lower return	1 Lateral supply Lower return	2 Lower supply Lateral return	3 Lateral supply Lateral return
C0	Standard	Cross Flow	All	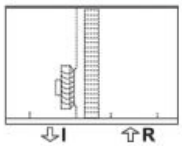	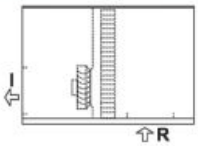	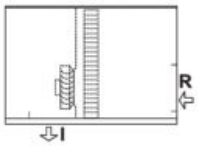	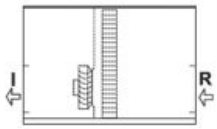
CS	Fresh air damper, interlocked with return damper	Cross Flow	All	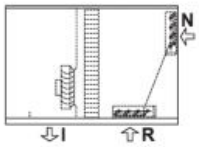	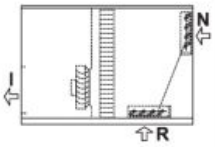	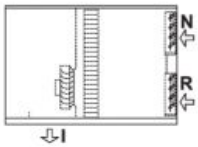	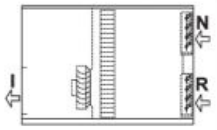
CF	100% fresh air	Cross Flow	All	✗	✗	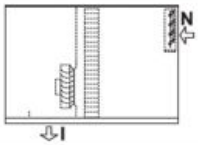	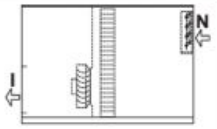
CK	Fresh air damper and exhaust air damper	Cross Flow	All	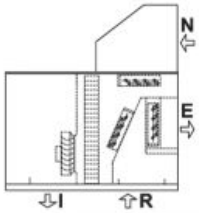	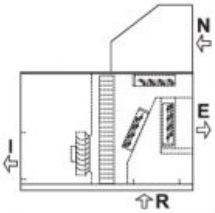	✗	✗
CA	Axial return fan	Cross Flow	All	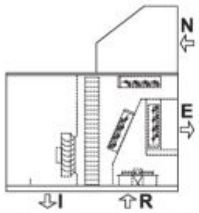	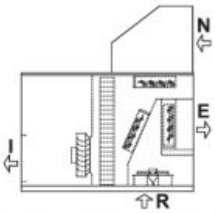	✗	✗
CP	Lower return EC plug-fan	Cross Flow	All	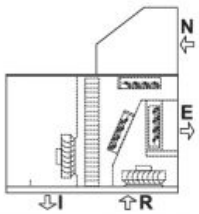	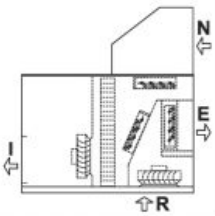	✗	✗
CR	Lower return EC plug-fan + cooling recovery circuit	Cross Flow	All	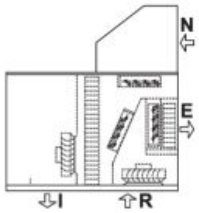	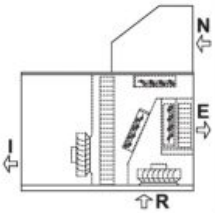	✗	✗
CQ	Return EC plug-fan or centrifugal fan in top box	Cross Flow	All	✗	✗	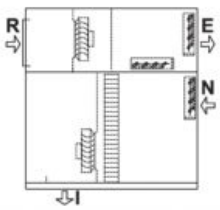	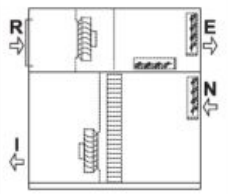

I: soufflage d'air **R:** reprise d'air **N:** entrée d'air neuf **E:** extraction d'air

Assembly	Description	Air flow	Models	Indoor air direction			
				0 Lower supply Lower return	1 Lateral supply Lower return	2 Lower supply Lateral return	3 Lateral supply Lateral return
CT	Return EC plug-fan or centrifugal fan in top box + cooling recovery circuit	Cross Flow	All	✗	✗	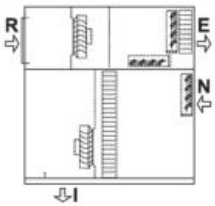	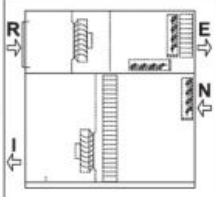
CW	Lower return EC plug-fan + rotary heat exchanger	Cross Flow	All	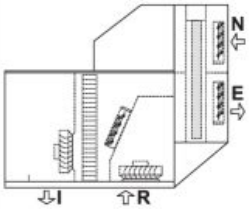	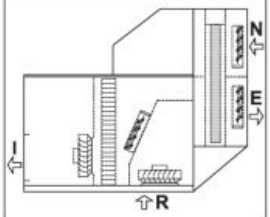	✗	✗
T0	Standard in Tunnel Flow	Tunnel Flow	0200 to 0380	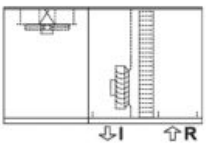	✗	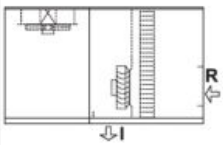	✗
TS	Fresh air damper, interlocked with return damper	Tunnel Flow	0200 to 0240	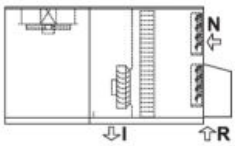	✗	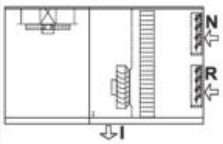	✗
			0280 to 0380	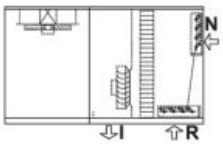	✗	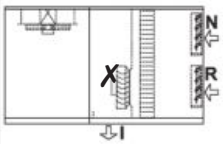	✗
TP	Lower return EC plug-fan	Tunnel Flow	0200 to 0240	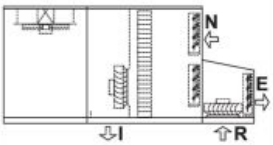	✗	✗	✗
			0280 to 0380	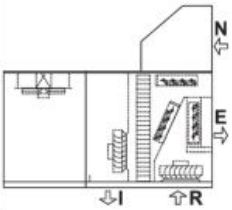	✗	✗	✗
TW	Lower return EC plug-fan + rotary heat exchanger	Tunnel Flow	0200 to 0380	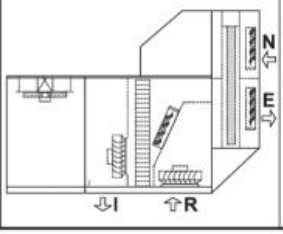	✗	✗	✗

I: soufflage d'air **R:** reprise d'air **N:** entrée d'air neuf **E:** extraction d'air

Electrical power (Group 4)

These units can be supplied for the following power supply voltages:

- 400 V / 3 ph + N / 50 Hz (standard)
- 400 V / 3 ph / 50 Hz (optional)

Coils coating (Group 7)

- Coils with copper pipes and copper fins. Upon request.
- Coils with copper pipes and fins of an aluminium alloy (INERA®), of high performance and great resistance to the corrosion.
- Coils with copper pipes and aluminium fins with polyurethane coating.
- Blygold® coating.

Note: These coating can be applied to various coils (outdoor, indoor and hot water coil) according to the combinations available in our "Selection Software".

Heating (Group 8)

The unit only can incorporate one of these heating elements:

- **Auxiliary electrical heaters**, with two power stages and on/off control, for assembly and connection inside the unit.

  Up to 3 values of total power available for each model:

Vectios™ PJ	E0L (Low)	E0N (Nominal)	E0H (High)
0090 to 0120	12 kW	18 kW	unavailable
0140 to 0190	12 kW	18 kW	27 kW
0200 to 0380	18 kW	27 kW	36 kW

- **Auxiliary hot water coil**, with three-way valve and proportional control, for assembly inside the unit.

  The unit incorporates an anti-freeze thermostat as safety system.

  There are two configuration types available:

  - Standard (B0S), the only safety system is the anti-freeze thermostat.
  - Great Cold (B0C), with anti-freeze technology based on the water temperature. This protection is made up of a circulation pump and two sensors inserted in the input and the output of the coil.

    Important: this option is mandatory for an outdoor temperature lower than -20ºC WB. Consult for percentages of glycol water above 20%.

    Note: on units with the "Great Cold" option, air supply only may be lateral (factory-configured).

  Note: the active dehumidification is not compatible with the hot water coil.

- **Gas boiler + Auxiliary hot water coil**. Natural or propane gas boiler with modulating actuator, in accordance with the Gas Directive 2009/142/EC, mounted on the side of the unit.

  The boiler is connected to the water circuit of the auxiliary coil.

  Up to 3 values of total power available for each model:

Vectios™ PJ	G1L (Low)	G1N (Nominal)	G1H (High)
0090 to 0190	unavailable	Condexa PRO 40 (coming soon)	Condexa PRO 70
0200 to 0380	Condexa PRO 50 (coming soon)	Condexa PRO 70	Condexa PRO 100

Note: the active dehumidification is not compatible with the gas boiler.

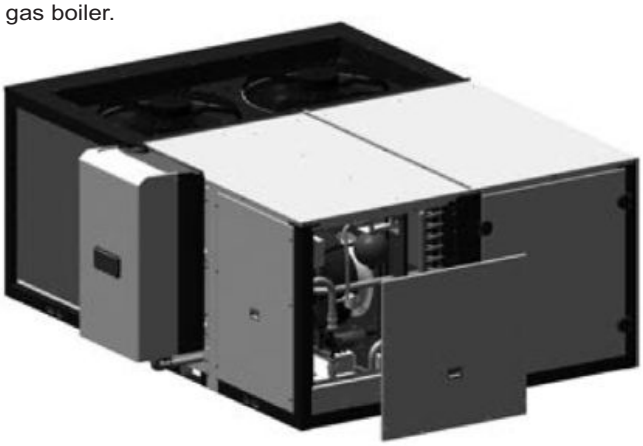

- Natural or propane **gas burner** with modulating actuator, in accordance with the Gas Directive 2009/142/EC, installed inside a pre-assembly roofcurb.

  The PJ unit with lower air supply will be placed on this roofcurb.

  Up to 3 values of total power available for each model:

Vectios™ PJ	G0L (Low)	G0N (Nominal)	G0H (High)
0090 to 0190	PCH020	PCH034	PCH045
0200 to 0240	unavailable	PCH065	PCH080
0280 to 0380	unavailable	PCH080	PCH105

Note: It's recommended to use the clogged filter pressostat (optional)in units with gas burner.

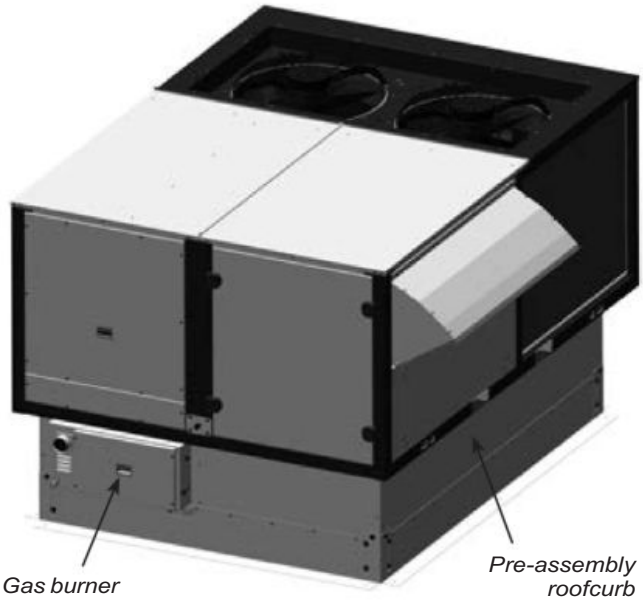

Protection for low outdoor T (Group 9)

- Kit 1: Antifreeze protective kit (<-10ºC). Mandatory for an outdoor temperature lower than -10ºC WB.

  This kit includes:

  - Electrical heater for protection of the components of the electrical cabinet.
  - Compressor with protection for low temperature.

- Kit 2: Antifreeze protective kit (<-14ºC). Mandatory for an outdoor temperature lower than -14ºC WB.

  In addition to the options of -10ºC, this includes:
  - Reinforced electrical heater for protection of the components of the electrical cabinet.
  - Electrical heater for anti-freeze protection of dampers of the mixing box (if applicable).
  - Protective kit of the gas burner for low temperature (if applicable).
- Kit 3: Kit 1 + Dampers of the mixing box with spring for automatic closing in case of a power failure.
- Kit 4: Kit 2 + Dampers of the mixing box with spring for automatic closing in case of a power failure.

Available pressure of the indoor fan (Group 10)

- There are 3 optional fans depending on the available pressure:
  - Low pressure (L): all models except for 0140, 0160, 0180, 0190, 0280 and 0320.
  - Nominal pressure (N): all models.
  - High pressure (H): all models.

  Important: our "Selection Software" will choose the supply fan with lower consumption for the available pressure required.

Air filtration + stop-drop (Group 11)

Options to improve indoor air quality:

- Different combinations of filters are available:
  - G4 gravimetric filters with low pressure drop.
  - G4 gravimetric filters standard type + M6, F7 or F9 folded opacimetric filters.
  - G4 gravimetric filters with low pressure drop + F7 or F9 folded opacimetric filters.
  - Dual-stage of folded opacimetric filters (M6+F7, M6+F9, F7+F9 or F9+F9).

  Important: G4 filters standard type supplied from the factory cannot be replaced by other types of filters because the thickness of the frames is different.

  Classification of the filters according to the new **ISO 16890 Standard**:
  - G4 → ISO Coarse 60%
  - M6 → ISO ePM2.5 50%
  - F7 → ISO ePM1 60%
  - F9 → ISO ePM1 90%
- Stop-drop in the indoor air coil. Recommended in cases where a high moisture content in the air is foreseen or when the air flow is high.

  Note: with hot water coil it is not possible to assemble the stop-drop.

Type of outdoor fan (Group 12)

- Axial 2-speed outdoor fan(s) directly coupled to the motor. Watertight motor class F, IP54 and internal thermal protection. Dynamically balanced propellers and outdoor protective grille.

External insulation (Group 13)

- Ceramic panel for thermal and acoustic insulation, with Euroclass fire classification A2-s1, d0 (M0) in panels not removable in contact with the indoor air (top, bottom panel).

  Note: the other panels and registers of the indoor unit always include thermal and acoustic insulation, with Euroclass fire classification A2-s1, d0 (M0).

Indoor unit configuration (Group 14)

- Condensate drain pan in stainless steel for corrosion protection.
- Control of the overpressure (available in CP, CQ, CW, TP and TW assemblies). In installations with different air flow in supply and return, to prevent the entry of outside air or to eliminate odours from inside, the fresh air damper and the exhaust damper will be managed independently.
- Differential pressure switch to detect clogged filters as safety protection.

Outdoor unit configuration (Group 15)

- Fresh air intake protection grid (mesh of 9 x 9 mm).
- Outdoor coil protective grille.
- Antivibration mounts made of rubber.
- Stop-drop at the fresh air intake. This stop-drop and the thermoenthalpic free-cooling are necessary in cases where a high moisture content in the air is foreseen.

Passive recovery (Group 16)

- The rotary heat exchanger is fitted into a module placed on one side of the unit (assemblies CW and TW). This module is supplied disassembled with the unit, for installation on site.

  This rotary recovery unit is used to transfer the sensible and latent heat from the air-conditioned room's return air to the fresh air used for ventilation, before it's discharged outdoors. This option reduces the compressors runtime, ensuring energy saving and benefiting the environment.

  The efficiency of energy recovery depend on the wheel selected: material, wheel diameters, channel cross section and type of speed control.

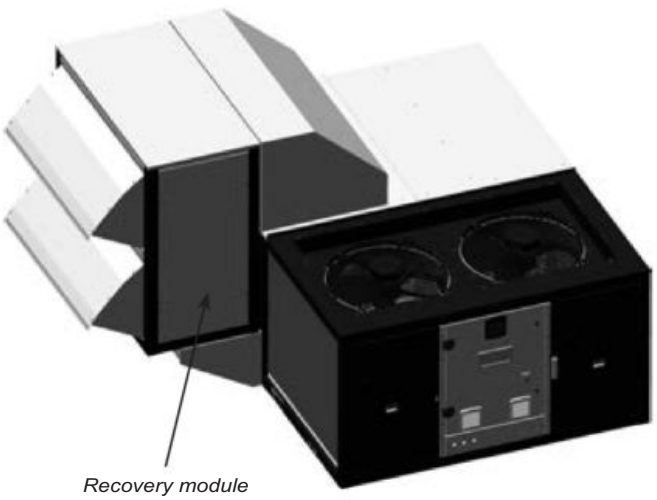

Recovery module

Extra heating (Group 17)

- Heat recovery coil (HRC). The coil function is to pre-heat the air that will pass through the main indoor coil. For this, it uses the temperature of an outdoor water installation.

  The coil is supplied with a 3-way valve for installation outside the unit but manages by the electronic control.

  This option is compatible with C0, CS, CF, CQ, CT, T0 and TS assemblies.
- With CF assembly, 100% fresh air, it is possible to incorporate a preheater module (electrical heater) coupled to the fresh air intake. This module is supplied in kit for installation on site.

  The electrical heater with proportional control will modulate capacity to get the condenser inlet conditions within the operating limits of the cooling circuit in case of very low outdoor temperatures.

  Two values of power are available: low (B) and nominal (N).

Note: The electrical connection of the kit is the responsibility of the installer.

Special applications (Group 18)

- **Active dehumidification** with condensation coil. Extra condensation coil for dehumidification applications in high relative humidity ambients.

  The dehumidification process is done by the main refrigerant coil. Hot gas recovered is injected in the additional condensation coil to reheat the air.

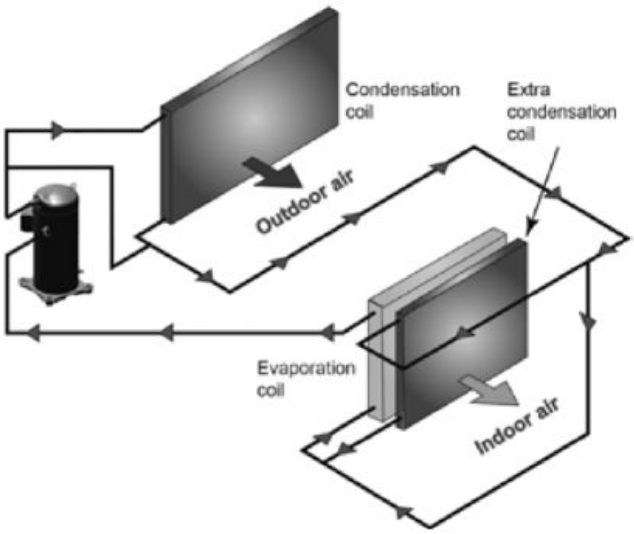

This new option is the solution for applications which require the highest degree of indoor comfort and humidity control.

It could be of particular interest to the supermarkets, restaurants, museums and in cases of high latent cooling load and/or in humid climates.

It's used in low temperature stock applications to avoid condensation over goods or refrigerantion cabinets glass doors.

It allows controlling the maximum levels of humidity in the room in the most efficient way, and independently of the location and the part-load of the unit.

The use of the extra condensation battery to reheat the air after the evaporator provides a flexible and efficient operation to accurately compensate for the room demand.

This option also allows an additional reheating using the auxiliary electrical heaters (Group 8).

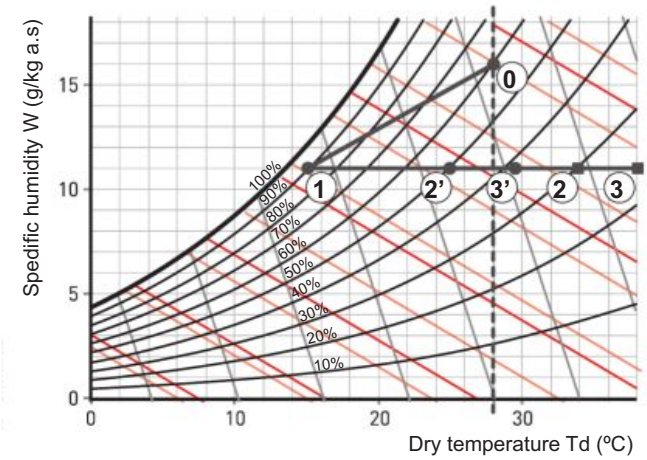

0 → 1: Normal evolution in the evaporator without using extra condensation coil

1 → 2: Reheating using extra condensation coil in units of 1 circuit

1 → 2': Reheating using extra condensation coil in units of 2 circuits

2 → 3: Additional reheating using the auxiliary electrical heaters in units of 1 circuit

2' → 3': Additional reheating using the auxiliary electrical heaters in units of 2 circuits

The "Selection software" allows to obtain the value of the supply air temperature for the point 2 (or 2 ') according to the extra condensation coil. It will also calculate point 3 (or 3') according to the power selected for the auxiliary electrical heaters.

Note: the active dehumidification is not compatible with the hot water coil, the gas boiler and the air zoning.

- **Zoning of the air flow** up to 4 different zones.

  This option allows the management of the air flow of the unit to condition up to 4 different zones with a minimum air flow of 35% (all in one operating mode: heating or cooling).

  The air zoning includes 4 zone terminals and a control board in a separate box. The zone terminals, the servomotors of the dampers as well as the main board of the Vectic control are connected to this box.

  The unit adapts the air flow and the capacity according to the needs and active zones at any time. The electronic control sends the control signal to the servomotors of the dampers.

  Important: the dampers and servomotors are not supplied from the factory.

  Note: the active dehumidification is not compatible with the air zoning.

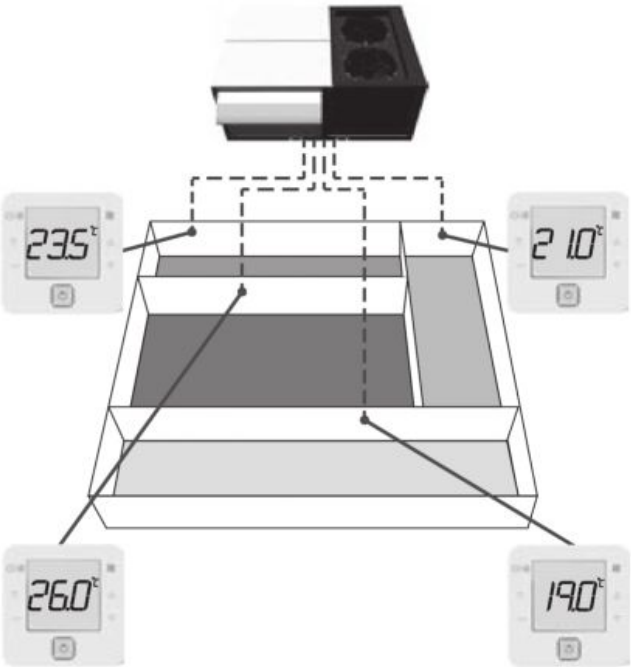

- **Low return temperature application**.

  This option is particularly interesting in certain applications for food conservation and it can be used in large storage facilities.

  With this option, the unit, operating in cooling mode, is adapted to manage an installation with low return temperature (15ºC).

- The mounting **100% fresh air** with no return or extraction air flow (CF assembly) will address special requests where return air flow cannot be used, in order to avoid contamination (kitchens, and some other places with indoor odours or other pollutants).

  In order to keep the cooling circuit working inside operation limits, and depending on design conditions, the unit could be selected with lower air flow than minimum used for the same size in the rest of assemblies.

  Depending on the heating design conditions, it is also necessary to select an additional electrical heating in the fresh air intake (preheater module, Group 17).

Sensors (Group 19)

- Sensor(s) of ambient temperature. There are 3 options:
  - One NTC sensor connected to the control board.

    Note: An ambient sensor with RS485 communication is required for installation at more than 30 meters.
  - One to four sensors with RS485 communication.
  - Sensor(s) installed on the master unit of the local network (pLAN).
- One to four sensors of ambient temperature + humidity, with RS485 communication or installed on the pLAN network. This sensor is compulsory in units with enthalpic or thermoenthalpic free-cooling (optional). In this case, the outdoor air humidity sensor is also added.

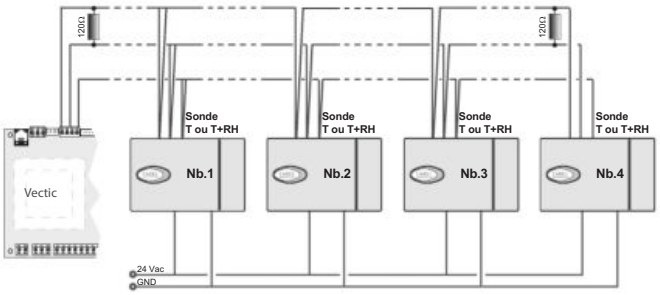

- Smoke detecting sensor. Smoke detecting station in accordance with the NF S 61-961 standard.
- Air quality sensor to enable measuring CO_2. There are 3 options:
  - Sensor for installation in the environment.
  - Sensor duct-mounted (attached picture),
  - Sensor installed on the master unit of the local network (pLAN).

Free-cooling + outdoor humidity (Group 20)

- Running the unit in free-cooling mode allows it to make best use of outdoor air conditions when these are more favourable than the return air conditions. This allows the cooling capacity to be reduced. The percentage of outdoor air can vary between 0% and 100%.

  There are three options for free-cooling management:
  - Thermal, by comparing the temperatures.
  - Enthalpic, by comparing the enthalpies. Recommended in cases where a high moisture content in the air is foreseen.
  - Thermoenthalpic, by comparing the enthalpies and correcting for temperature. This is the optimum solution as it takes the variability of the climate into account.

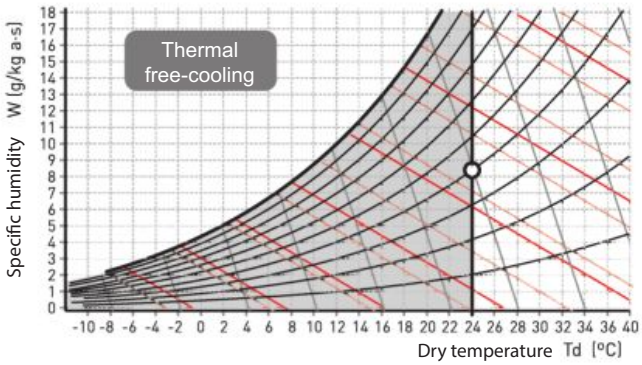

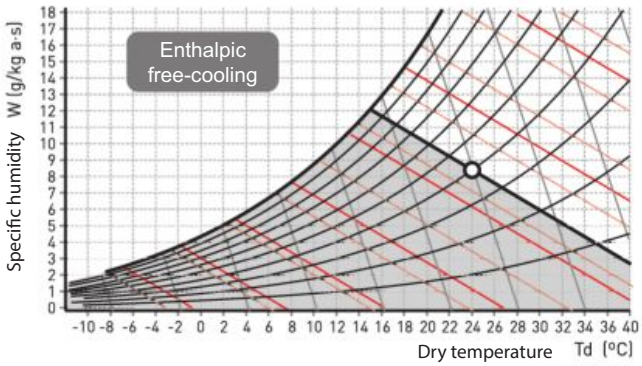

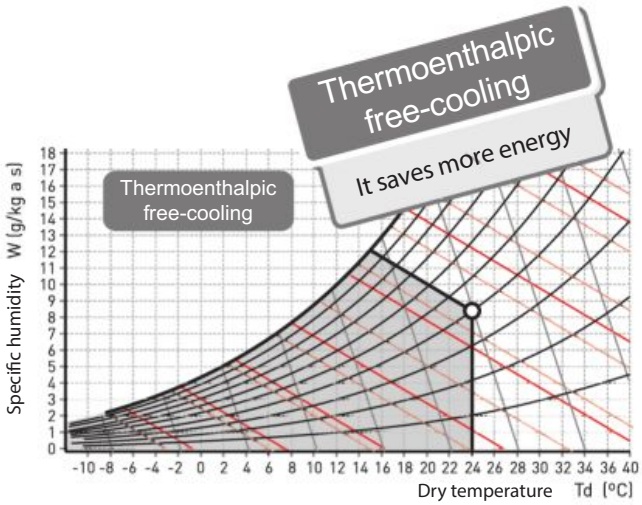

- Outdoor air humidity sensor (compulsory in units with optional enthalpic or thermoenthalpic free-cooling). There are 2 options:
  - Sensor supplied with the unit.
  - Sensor installed on another unit of the local network (pLAN).

Terminal + unit communication (Group 21)

- By default, the electronic control Vectic is supplied with a graphic terminal installed in the electrical cabinet of the unit, but these other configurations also are available:

VecticGD graphic terminal

TCO user terminal

  - TCO user terminal installed in the electrical cabinet, instead of the VecticGD graphic terminal.
  - VecticGD graphic terminal installed in the electrical cabinet and TCO user terminal remote up to 100 meters.
  - TCO user terminal installed in the electrical cabinet and VecticGD graphic terminal remote up to 200 meters (two TCONN bypass cards must be used from 50 to 200 meters).
  - VecticGD terminal installed in the electrical cabinet and VecticGD terminal remote up to 200 meters (two TCONN bypass cards must be used from 50 to 200 meters).

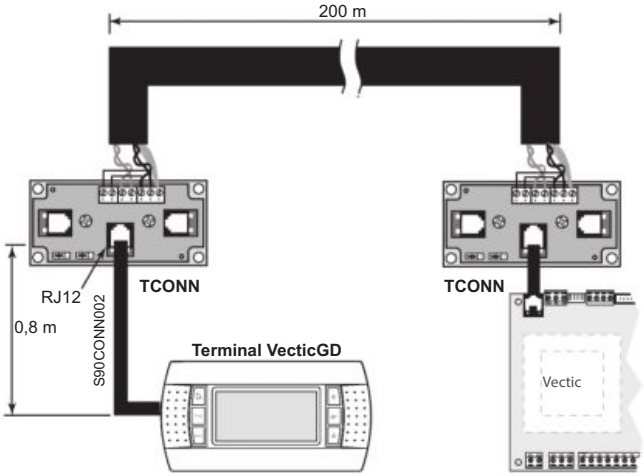

  - Control without terminal (for units with shared terminal in a pLAN network).
- By default, the electronic control is configured for a stand-alone unit, but it is also possible to place it in a pLAN network (µPC MEDIUM Local Area Network) as Master or Slave.
- This control allows the connection to a centralised technical management system by using a specific BMS card for some of the following communication protocols:
  - RS485 serial cards for network communication with protocols: Carel, Modbus, LonWorks®, BACnet™ MSTP, Konnex.
  - Ethernet pCO Web card for network communication with protocols: Modbus TCP/IP, BACnet™ Ethernet, TCP/IP, SNMP V1-2-3, FTP and HTTP.

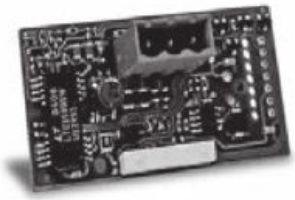

RS485 Carel/Modbus card

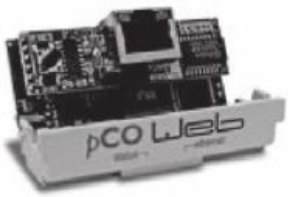

Ethernet pCO Web card

Supervision solutions

Different solutions of supervision are available bases on the dimensions of the installation for unit fitted with Ethernet pCO Web and RS485 Carel / Modbus cards.

- **pCO Web**

  It is the solution for the management and supervision of a single unit if this incorporates the Ethernet pCO Web card.

- **PlantWatchPRO3**

  This is a solution designed for the monitoring of small and medium-size installations, capable of manage up to 30 units. Suitable for technical environments, no parts are in movement. It's available in two versions: panel and wall.

  Includes: 7 " touch display, buzzer for notifications, 1 USB port and 1 SD card slot for downloading reports, charge devices models and applying service packs.

- **BOSS**

  This is the solution for the management and supervision of air-conditioning installations with up to 300 units. Integrated Hotspot Wi-Fi.

  It offers advanced monitoring and maintenance functions and allows zones and groups to be created to simplify the management of the installation. It also allows energy meters to be integrated to monitor the installation electricity consumption.

  BOSS is available in two versions:

  - CPU device.
  - CPU device, monitor, keyboard and screen.

  For this option, each unit needs one RS485 Carel / Modbus board.

  For this option, each unit needs one RS485 Carel / Modbus board.

These systems are used to manage the installation remotely. All the information on the system can be accessed via a simple Internet connection. The online interface, the same one used by the local user, enables monitoring and complete configuration of the installation: from the office or anywhere else the user happens to be.

To control multiple sites remotely, there are special tools dedicated to centralized management, such as **RemotePRO** and **RemoteValue**.

Miscellaneous item 1 (Group 22)

- Management of an humidifier with proportional or on/off control.
- Energy meter for monitoring of the power consumption of the installation.
- Energy meter and calculation of the cooling and heating capacities. In addition to the energy meter, the unit incorporates mixing and supply enthalpic sensors with RS485 communication that enable cooling and heating capacities to be calculated.
- Refrigerant leak detector. This allows prompt identification of gas leaks, guaranteeing the safety of any people in the vicinity. Installation of the device ensures compliance with European standards F-GAS and EN378 as well as ASHRAE 15.

Miscellaneous item 2 (Group 23)

- Compressor soft starter.
- Tropicalization: tropicalised components on the electrical cabinet with protective varnish: control board, cards and terminals.
- High performance phase monitoring relay, which allows the protection settings to be adjusted (highly recommended for installations with power system voltage instability, lag between current and voltage, high level of electromagnetic disturbances EMC, etc.
- High performance electrical switchgear.

Centrifugal return fan (Group 24)

- Centrifugal return fan, coupled by pulleys and belts. Electric motor with tensioner, class F, IP55 and internal thermal protection. Turbine with an impeller of front-curved blades. Greased spherical bearings, with no maintenance required. Available in CQ and CT assemblies.

  There are 9 fan options depending on:

  - The air flow: low, nominal and high.
  - The available pressure: low, nominal and high.

Pre-assembly roofcurbs

- The "Cross flow" assemblies can rest on standardised pre-assembly roofcurbs with adjustable height, built in galvanised steel panelling with polyester paint and thermal insulation.

  The levelling system uses angle pieces that allow adjustments in the X and Y axes.

- The "Tunnel flow" assemblies have a wide range of adaptation roofcurbs which are ready for the replacement on site of existing units from different manufacturers (upon request).

TECHNICAL CHARACTERISTICS (EN-14511-2018)

RPJ series		0090	0120	0140	0160	0180	0190	0200	0220	0240	0280	0320	0360	0380
Cooling capacities	Cooling capacity ① (kW)	23,00	29,01	34,98	38,96	43,58	45,21	50,10	54,50	60,20	69,06	73,15	81,26	90,85
	Power input ② (kW)	7,17	9,34	10,65	12,14	14,15	14,92	15,61	17,30	20,00	21,51	22,93	26,38	30,18
	EER performance	3,21	3,11	3,28	3,21	3,08	3,03	3,21	3,15	3,01	3,21	3,19	3,08	3,01
	SEER	4,92	4,89	4,60	4,46	4,34	4,33	4,66	4,58	4,50	4,51	4,50	4,32	4,26
	ηs	194%	193%	181%	175%	171%	170%	183%	180%	177%	177%	177%	170%	167%
Outdoor circuit fan	Nominal air flow (m^3/h)	9.000	14.500	17.000	17.000	17.000	17.750	31.000	31.000	31.000	33.000	33.000	34.500	35.000
	Available static pressure (mm.w.c)	5												
	Type	Electronic axial fan												
	Number / Diameter (mm)	1 / 630	1 / 800					2 / 800						
	Motor output (kW)	0,9	2,6					2 x 2,6						
	Maximum speed (r.p.m.)	1.140	1.020					1.020						
	Maximum absorbed current (A)	1,6	3,9					7,8						
Indoor circuit supply fan	Nominal air flow (m^3/h)	5.100	6.500	8.500	8.750	9.000	9.000	12.000	12.500	12.500	15.500	15.500	16.000	16.000
	Available static pressure (mm.w.c)	12	12	12	15	15	15	20	20	20	20	20	20	25
	Type	Electronic plug-fan												
	Number / Diameter (mm)	1 / 500		1 / 500				2 / 500					2 / 500	
	Motor output (kW)	1 x 2,65		1 x 2,83				2 x 2,65					2 x 2,83	
	Power input (kW)	0,62	1,01	1,79	1,90	2,00	2,04	2,04	2,20	2,20	3,53	3,53	3,42	3,75
	Speed (r.p.m.)	1.700												
	Maximum absorbed current (A)	4,2		4,3				8,4					8,6	
Compressor	Type	Scroll												
	No. compressors / stages / circuits	2 / 2 / 1												
	Oil type	Copeland 3MAF 32cST, Danfoss POE 160SZ, ICI Emkarate RL 32CF, Mobil EAL Artic 22CC												
	Volume of oil (l)	2,5	2,5	3,3	3,5	3,5	3,5	3,6	5,0	5,0	5,0	6,5	6,8	6,8
Electrical characteristics	Mains voltage	400 V / III ph / 50 Hz (±10%)												
	Power supply	3 Wires + Ground + Neutral												
	Maximum absorbed current (A)	18,9	26,5	26,4	29,9	33,6	34,0	42,6	49,0	53,5	54,6	55,7	61,3	74,3
Refrigerant	Type	R-410A												
	Global warming potential (GWP) ③	2.088												
	Charge (kg)	7,3	7,6	9,7	9,7	10,0	10,3	9,7	9,7	10,0	17,0	17,5	17,5	18,0
	Environment impact (tCO2eq)	15,2	15,9	20,3	20,3	20,9	21,5	20,3	20,3	20,9	35,5	36,5	36,5	37,6
	Additional charge of optional active dehumidification (kg)	3,3	3,3	5,4	5,4	5,4	5,4	10,5	10,5	10,5	10,5	10,5	10,5	10,5
	Environment impact of active dehumidification (tCO2eq)	6,9	6,9	11,3	11,3	11,3	11,3	21,9	21,9	21,9	21,9	21,9	21,9	21,9
Weight	C0 assembly (kg)	594	617	699	698	704	701	914	929	936	1.035	1.059	1.057	1.078

① Cooling capacity calculated in accordance with the EN-14511-2018 standard given for indoor temperature conditions 27ºC, 19ºC WB and 35ºC outdoor temperature.
② Total power input by compressors and motorised fans under nominal conditions, calculated in accordance with the EN-14511-2018 standard.
③ Climatic warming potential of a kilogram of fluorinated greenhouse gas in relation to a kilogram of carbon dioxide over a period of 100 years.

EUROVENT CERTIFIED PERFORMANCE
www.eurovent-certification.com

Eurovent certified values

TECHNICAL CHARACTERISTICS (EN-14511-2018)

IPJ series		0090	0120	0140	0160	0180	0190	0200	0220	0240	0280	0320	0360	0380
Cooling capacities	Cooling capacity ① (kW)	22,51	28,04	33,83	37,32	41,97	44,42	53,71	58,34	60,95	69,04	73,04	81,58	91,20
	Power input ③ (kW)	7,04	9,03	10,30	11,84	13,47	14,33	16,62	18,47	19,47	21,36	23,00	25,89	29,08
	EER performance	3,20	3,11	3,28	3,15	3,12	3,10	3,23	3,16	3,13	3,23	3,18	3,15	3,14
	SEER	4,91	4,89	4,60	4,46	4,35	4,40	4,83	4,85	4,90	4,66	4,57	4,47	4,47
	ηs	193%	193%	181%	175%	171%	173%	190%	191%	193%	183%	180%	176%	176%
Heating capacities	Heating capacity ② (kW)	21,99	27,86	33,21	36,79	42,03	44,78	50,96	56,07	58,86	68,01	72,12	80,77	90,10
	Power input ③ (kW)	5,80	7,96	9,06	10,17	11,95	12,90	14,38	15,95	16,82	18,90	20,19	22,82	25,79
	COP performance	3,79	3,50	3,67	3,62	3,52	3,47	3,54	3,51	3,50	3,60	3,57	3,54	3,49
	SCOP	3,48	3,45	3,45	3,45	3,47	3,45	3,60	3,68	3,50	3,43	3,59	3,56	3,58
	ηs	136%	135%	135%	135%	136%	135%	141%	144%	137%	134%	140%	140%	140%
Outdoor circuit fan	Nominal air flow (m^3/h)	9.000	14.500	17.000	17.000	17.000	17.750	31.000	31.000	31.000	33.000	33.000	34.500	35.000
	Available static pressure (mm.w.c)	5												
	Type	Electronic axial fan												
	Number / Diameter (mm)	1 / 630	1 / 800					2 / 800						
	Motor output (kW)	0,9	2,6					2 x 2,6						
	Maximum speed (r.p.m.)	1.140	1.020					1.020						
	Maximum absorbed current (A)	1,6	3,9					7,8						
Indoor circuit supply fan	Nominal air flow (m^3/h)	5.100	6.500	8.500	8.750	9.000	9.000	12.000	12.500	12.500	15.500	15.500	16.000	16.000
	Available static pressure (mm.w.c)	12	12	12	15	15	15	20	20	20	20	20	20	25
	Type	Electronic plug-fan												
	Number / Diameter (mm)	1 / 500		1 / 500				2 / 500					2 / 500	
	Motor output (kW)	1 x 2,65		1 x 2,83				2 x 2,65					2 x 2,83	
	Power input (kW)	0,62	1,01	1,79	1,90	2,00	2,04	2,04	2,20	2,20	3,53	3,53	3,42	3,75
	Speed (r.p.m.)	1.700												
	Maximum absorbed current (A)	4,2		4,3				8,4					8,6	
Compressor	Type	Scroll												
	No. compressors / stages / circuits	2 / 2 / 1						4 / 4 / 2						
	Oil type	Copeland 3MAF 32cST, Danfoss POE 160SZ, ICI Emkarate RL 32CF, Mobil EAL Artic 22CC												
	Volume of oil (l)	2,5	2,5	3,3	3,5	3,5	3,5	2,5 + 2,5	2,5 + 2,5	2,5 + 3,3	3,3 + 3,3	3,3 + 3,5	3,5 + 3,5	3,5 + 3,5
Electrical characteristics	Mains voltage	400 V / III ph / 50 Hz (±10%)												
	Power supply	3 Wires + Ground + Neutral												
	Maximum absorbed current (A)	18,9	26,5	26,4	29,9	33,6	34,0	48,1	53,5	53,2	56,3	60,2	68,8	73,8
Refrigerant	Type	R-410A												
	Global warming potential (GWP) ④	2.088												
	Charge (kg)	8,0	8,3	11,0	11,0	11,3	11,6	2 x 6,3	2 x 6,4	2 x 6,5	2 x 10,0	2 x 10,2	2 x 10,2	2 x 10,3
	Environment impact (tCO2eq)	16,7	17,3	23,0	23,0	23,6	24,2	26,1	26,7	27,1	41,8	42,4	42,4	42,8
	Additional charge of optional active dehumidification (kg) ⑤	4,9	4,9	4,6	4,6	4,6	4,6	11,2	11,2	11,2	11,5	11,5	11,5	11,5
	Environment impact of active dehumidification (tCO2eq)	10,2	10,2	9,6	9,6	9,6	9,6	23,4	23,4	23,4	24,0	24,0	24,0	24,0
Weight	C0 assembly (kg)	585	610	675	680	685	690	990	995	1.040	1.155	1.160	1.165	1.170

① Cooling capacity calculated in accordance with the EN-14511-2018 standard given for indoor temperature conditions 27ºC, 19ºC WB and 35ºC outdoor temperature.
② Heating capacity calculated in accordance with the EN-14511-2018 standard given for indoor temperature conditions 20ºC and 6ºC WB outdoor temperature.
③ Total power input by compressors and motorised fans under nominal conditions, calculated in accordance with the EN-14511-2018 standard.
④ Climatic warming potential of a kilogram of fluorinated greenhouse gas in relation to a kilogram of carbon dioxide over a period of 100 years.
⑤ In two-circuit models, additional charge on circuit 2.

EUROVENT CERTIFIED PERFORMANCE
www.eurovent-certification.com

Eurovent certified values

Overall dimensions of the different assemblies

Cross flow

Vectios™ PJ	C0, CS and CF assemblies			CK, CA, CP and CR assemblies			CW assembly			CQ and CT assemblies		
	Length (mm)	Width (mm)	Height (mm)	Length (mm)	Width (mm)	Height (mm)	Length (mm)	Width (mm)	Height (mm)	Length (mm)	Width (mm)	Height (mm)
0090	2.225	1.750	1.230	2.230	1.755	1.905	2.230	2.565	1.905	2.230	1.760	1.975
0120	2.225	1.750	1.230	2.230	1.755	1.905	2.230	2.565	1.905	2.230	1.760	1.975
0140	2.225	1.750	1.230	2.230	1.755	1.905	2.230	2.565	1.905	2.230	1.760	1.975
0160	2.225	1.750	1.230	2.230	1.755	1.905	2.230	2.565	1.905	2.230	1.760	1.975
0180	2.225	1.750	1.230	2.230	1.755	1.905	2.230	2.565	1.905	2.230	1.760	1.975
0190	2.225	1.750	1.230	2.230	1.755	1.905	2.230	2.565	1.905	2.230	1.760	1.975
0200	3.000	2.200	1.230	3.000	2.205	1.905	3.000	3.015	1.905	3.000	2.210	1.995
0220	3.000	2.200	1.230	3.000	2.205	1.905	3.000	3.015	1.905	3.000	2.210	1.995
0240	3.000	2.200	1.230	3.000	2.205	1.905	3.000	3.015	1.905	3.000	2.210	1.995
0280	3.650	2.200	1.230	3.655	2.205	1.905	3.655	3.015	1.905	3.655	2.210	1.995
0320	3.650	2.200	1.230	3.655	2.205	1.905	3.655	3.015	1.905	3.655	2.210	1.995
0360	3.650	2.200	1.230	3.655	2.205	1.905	3.655	3.015	1.905	3.655	2.210	1.995
0380	3.650	2.200	1.230	3.655	2.205	1.905	3.655	3.015	1.905	3.655	2.210	1.995

Tunnel flow

Vectios™ PJ	T0 and TS assemblies			TP assembly			TW assembly		
	Length (mm)	Width (mm)	Height (mm)	Length (mm)	Width (mm)	Height (mm)	Length (mm)	Width (mm)	Height (mm)
0200	3.000	2.200	1.230	3.865	2.200	1.230	4.675	2.210	1.905
0220	3.000	2.200	1.230	3.865	2.200	1.230	4.675	2.210	1.905
0240	3.000	2.200	1.230	3.865	2.200	1.230	4.675	2.210	1.905
0280	3.650	2.200	1.230	3.655	2.210	1.905	4.465	2.210	1.905
0320	3.650	2.200	1.230	3.655	2.210	1.905	4.465	2.210	1.905
0360	3.650	2.200	1.230	3.655	2.210	1.905	4.465	2.210	1.905
0380	3.650	2.200	1.230	3.655	2.210	1.905	4.465	2.210	1.905

Cross flow (all models)

Tunnel flow (models 0200 to 0380)

OPERATION LIMITS

Inlet air conditions		Cooling		Heating
		RPJ	IPJ	IPJ
Indoor coil	Minimum	9,7ºC WB		10ºC
	Maximum	24ºC WB		27ºC
Outdoor coil	Minimum	12ºC ①		-15ºC WB ②
	Maximum	52ºC	48ºC	15ºC WB

① With a condensation pressure control operating down to -10ºC.

② When the outdoor temperature is usually below 5ºC WB, the installation of a support element is recommended.

SOUND LEVELS dB(A)

Sound power level (LW)

Vectios™ PJ	0090	0120	0140	0160	0180	0190	0200	0220	0240	0280	0320	0360	0380
63 Hz	55,2	60,8	61,4	60,9	61,3	63,1	64,3	64,5	64,9	64,8	64,6	64,6	65,3
125 Hz	64,2	66,7	68,9	66,1	70,0	71,1	69,6	69,9	71,5	72,4	71,3	71,4	74,0
250 Hz	71,8	74,8	76,1	72,9	76,3	76,4	77,0	77,7	78,9	79,7	78,4	77,9	79,3
500 Hz	70,2	76,7	76,4	76,8	77,1	78,3	79,5	80,1	80,4	79,9	80,1	80,2	80,9
1000 Hz	72,0	76,2	76,3	77,5	77,3	78,2	79,4	79,9	80,2	79,8	80,4	80,6	80,7
2000 Hz	69,7	73,5	74,3	75,3	74,1	75,5	77,0	77,4	77,8	77,7	78,3	78,1	77,7
4000 Hz	62,6	69,2	70,3	70,6	70,4	72,2	73,1	73,4	73,7	73,8	73,9	74,2	74,4
8000 Hz	59,0	63,7	65,5	65,8	65,6	67,5	67,9	68,2	68,6	68,9	69,1	69,4	69,6
Total dB(A)	77,5	82,0	82,5	82,5	83,0	84,0	85,0	85,5	86,0	86,0	86,0	86,0	86,5

Sound pressure level (LP)

Measurement conditions: in a clear field, measured at a distance of 5 metres, directivity 2 and at 1,5 metres from the ground.

Vectios™ PJ	0090	0120	0140	0160	0180	0190	0200	0220	0240	0280	0320	0360	0380
Total dB(A)	51,0	55,5	56,0	56,0	56,5	57,5	58,3	58,8	59,3	59,3	59,1	59,1	59,6

Note: The sound pressure level depends on the installation conditions and, as such, it only indicated as a guide. Values obtained according to the ISO 3744 standard.

ELECTRICAL CONNECTIONS

No.	Vectios™ PJ		0090 to 0380
1	Main power supply	400 III (±10%)	3 Wires + Ground + Neutral
2	Remote connection of graphic terminal (by default installed on the electrical cabinet) ①		telephone cable 6 wires standard (RJ12 connector)
4	Remote off/on (optional)		2 wires
5	General fault signal (optional)		2 wires
6	Circulation pump signal for HWC (antifreeze sec.) (opt.)		1 wire
7	Ambient probe	NTC	2 wires
		RS485	5 wires ②
8	Air quality probe (optional)		3 wires

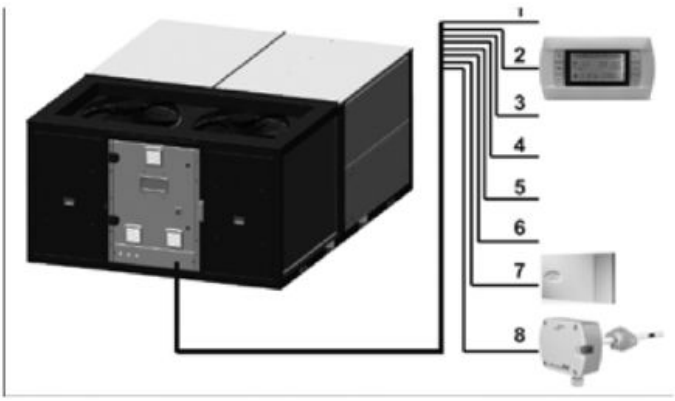

① In this case, it´s posible to install the user terminal on the electrical cabinet.

② Up to four RS485 ambient sensors can be connected in series on the field-bus of the control board.

OPTIONS FOR THE OUTDOOR UNIT

Axial 2-speed outdoor fan

Vectios™ PJ		0090	0120	0140	0160	0180	0190	0200	0220	0240	0280	0320	0360	0380
Nominal air flow	(m^3/h)	9.000	14.500	17.000	17.000	17.000	17.750	31.000	31.000	31.000	33.000	33.000	34.500	35.000
Available static pressure	(mm.w.c.)	4												
Number	(mm)	1	1					2						
Diameter	(mm)	630	800					800						
Output	(kW)	0,4 / 0,6	1,2 / 1,9					2 x (1,2 / 1,9)						
Maximum speed	(r.p.m.)	690 / 840	670 / 880					670 / 880						
Maximum absorbed current	(A)	1,2	3,9					2 x 3,9						

OPTIONS FOR THE INDOOR UNIT

Stop-drop in the indoor air coil

Air flow at which it is recommended to install a stop-drop in the indoor coil.

Vectios™ PJ	0090	0120	0140	0160	0180	0190	0200	0220	0240	0280	0320	0360	0380
Air flow (m^3/h)	7.776	7.776	10.206	10.206	10.206	10.206	14.580	14.580	14.580	14.580	18.468	18.468	18.468

Note: for operating conditions with high dehumidification in the indoor coil (e.g. in installations close to the coast) it may be necessary to install a separator even if the flow is less than the previous one.

Note: the stop-drop in the indoor coil is not compatible with the hot water coil or the gas boiler.

Supply plug-fan EC with high (H) or low (L) available pressure

Vectios™ PJ			0090	0120	0140	0160	0180	0190	0200	0220	0240	0280	0320	0360	0380
Nominal air flow		(m^3/h)	5.100	6.500	8.500	8.750	9.000	9.000	12.000	12.500	12.500	15.500	15.500	16.000	16.000
Nominal available static pressure		(mm.w.c.)	12	12	12	15	15	15	20	20	20	20	20	20	25
Low pressure (L)	Number / Diameter	(mm)	1 / 500		--							--		2 / 500	
	Output	(kW)	1,3		--				5,6			--		2 x 2,6	
	Speed	(r.p.m.)	1.350		--				2.200			--		1.700	
	Maximum absorbed current	(A)	2,1		--				8,9			--		2 x 4,0	
High pressure (H)	Number / Diameter	(mm)	1 / 500		2 / 500				2 / 500						
	Output	(kW)	2,8		2 x 2,6				2 x 5,6						
	Speed	(r.p.m.)	1.700		1.700				2.200						
	Maximum absorbed current	(A)	4,3		2 x 4,2				2 x 8,4						

Note: the value of power input according to the selected flow can be found at our “Selection Software”.

Axial return fan (CA assembly)

Vectios™ PJ		0090	0120	0140	0160	0180	0190	0200	0220	0240	0280	0320	0360	0380
Maximum air flow	(m^3/h)	5.100	6.500	8.500	8.750	9.000	9.000	12.000	12.500	12.500	15.500	15.500	16.000	16.000
Available static pressure	(mm.w.c.)	5												
Number / Diameter	(mm)	1 / 500		2 / 450				2 / 500			3 / 500			
Output	(kW)	0,7		2 x 0.5				2 x 0.7			3 x 0.7			
Speed	(r.p.m.)	1.390		1.360				1.390			1.390			
Maximum absorbed current	(A)	1,4		2 x 1,0				2 x 1,4			3 x 1,4			

524

Centrifugal return fan (CQ / CT assemblies)

Vectios™ PJ			0090	0120	0140	0160	0180	0190	0200	0220	0240	0280	0320	0360	0380
Option 1: Low flow + nominal pressure	Available pressure	(mm.w.c.)	20												
	Air flow	(m^3/h)	4.080	5.200	6.800	7.000	7.200	7.200	9.600	10.000	10.000	12.400	12.400	12.800	12.800
	Motor output	(kW)	0,75	1,10	1,50	2,20	2,20	2,20	2,20	2,20	2,20	2 x 1,50	2 x 1,50	2 x 1,50	2 x 1,50
	Power input	(kW)	0,73	1,20	1,46	1,65	1,73	1,73	1,88	2,06	2,06	2 x 1,22	2 x 1,22	2 x 1,30	2 x 1,30
	Max. abs. current	(A)	2,10	3,20	4,10	6,90	6,90	6,90	6,90	6,90	6,90	2 x 4,10	2 x 4,10	2 x 4,10	2 x 4,10
	Speed	(r.p.m.)	888	976	806	830	839	839	683	696	696	779	779	788	788
	Code		OPK0671	OPK0673	OPK0677	OPK0684	OPK0684	OPK0684	OPK0682	OPK0682	OPK0682	2 x OPK0677	2 x OPK0677	2 x OPK0677	2 x OPK0677
Option 2: Low flow + high pressure	Available pressure	(mm.w.c.)	50												
	Air flow	(m^3/h)	4.080	5.200	6.800	7.000	7.200	7.200	9.600	10.000	10.000	12.400	12.400	12.800	12.800
	Motor output	(kW)	1,50	2,20	3,00	3,00	3,00	3,00	3,00	4,00	4,00	2 x 2,20	2 x 2,20	2 x 2,20	2 x 2,20
	Power input	(kW)	1,26	1,78	2,26	2,50	2,59	2,59	2,96	3,12	3,12	2 x 2,02	2 x 2,02	2 x 2,11	2 x 2,11
	Max. abs. current	(A)	4,10	6,90	7,20	7,20	7,20	7,20	7,20	9,00	9,00	2 x 6,90	2 x 6,90	2 x 6,90	2 x 6,90
	Speed	(r.p.m.)	1.326	1.341	1.133	1.139	1.142	1.142	954	958	958	1.130	1.130	1.131	1.131
	Code		OPK0672	OPK0674	OPK0680	OPK0680	OPK0680	OPK0680	OPK0681	OPK0683	OPK0683	2 x OPK0676	2 x OPK0676	2 x OPK0676	2 x OPK0676
Option 3: Nominal flow + nominal pressure	Available pressure	(mm.w.c.)	20												
	Air flow	(m^3/h)	5.100	6.500	8.500	8.750	9.000	9.000	12.000	12.500	12.500	15.500	15.500	16.000	16.000
	Motor output	(kW)	1,10	1,50	1,50	2,20	2,20	2,20	2,20	2,20	2,20	2 x 1,50	2 x 1,50	2 x 1,50	2 x 1,50
	Power input	(kW)	1,15	1,26	1,55	1,73	1,81	1,81	2,00	2,18	2,18	2 x 1,30	2 x 1,30	2 x 1,38	2 x 1,38
	Max. abs. current	(A)	3,20	4,10	4,10	6,90	6,90	6,90	6,90	6,90	6,90	2 x 4,10	2 x 4,10	2 x 4,10	2 x 4,10
	Speed	(r.p.m.)	967	783	656	672	679	679	545	553	553	637	637	644	644
	Code		OPK0673	OPK0677	OPK0678	OPK0682	OPK0682	OPK0682	OPK0685	OPK0685	OPK0685	2 x OPK0678	2 x OPK0678	2 x OPK0678	2 x OPK0678
Option 4: Nominal flow + high pressure	Available pressure	(mm.w.c.)	50												
	Air flow	(m^3/h)	5.100	6.500	8.500	8.750	9.000	9.000	12.000	12.500	12.500	15.500	15.500	16.000	16.000
	Motor output	(kW)	2,20	2,20	3,00	3,00	3,00	3,00	4,00	4,00	4,00	2 x 3,00	2 x 3,00	2 x 3,00	2 x 3,00
	Power input	(kW)	1,72	2,07	2,56	2,79	2,88	2,88	3,46	3,67	3,67	2 x 2,30	2 x 2,30	2 x 2,39	2 x 2,39
	Max. abs. current	(A)	6,90	6,90	7,20	7,20	7,20	7,20	9,00	9,00	9,00	2 x 7,20	2 x 7,20	2 x 7,20	2 x 7,20
	Speed	(r.p.m.)	1.338	1.130	949	951	953	953	797	799	799	949	949	949	949
	Code		OPK0674	OPK0676	OPK0681	OPK0681	OPK0681	OPK0681	OPK0686	OPK0686	OPK0686	2 x OPK0681	2 x OPK0681	2 x OPK0681	2 x OPK0681
Option 5: High flow + nominal pressure	Available pressure	(mm.w.c.)	20												
	Air flow	(m^3/h)	6.120	7.800	10.200	10.500	10.800	10.800	14.400	15.000	15.000	18.600	18.600	19.200	19.200
	Motor output	(kW)	1,10	1,50	2,20	2,20	2,20	2,20	3,00	4,00	4,00	2 x 2,20	2 x 2,20	2 x 2,20	2 x 2,20
	Power input	(kW)	1,13	1,24	2,28	1,72	1,79	1,79	2,90	3,14	3,14	2 x 1,88	2 x 1,88	2 x 2,01	2 x 2,01
	Max. abs. current	(A)	3,20	4,10	6,90	6,90	6,90	6,90	7,20	9,00	9,00	2 x 6,90	2 x 6,90	2 x 6,90	2 x 6,90
	Speed	(r.p.m.)	766	633	711	533	536	536	585	597	597	683	683	693	693
	Code		OPK0675	OPK0678	OPK0682	OPK0685	OPK0685	OPK0685	OPK0687	OPK0689	OPK0689	2 x OPK0682	2 x OPK0682	2 x OPK0682	2 x OPK0682
Option 6: High flow + high pressure	Available pressure	(mm.w.c.)	50												
	Air flow	(m^3/h)	6.120	7.800	10.200	10.500	10.800	10.800	14.400	15.000	15.000	18.600	18.600	19.200	19.200
	Motor output	(kW)	2,20	2,20	4,00	4,00	4,00	4,00	5,50	5,50	5,50	2 x 3,00	2 x 3,00	2 x 4,00	2 x 4,00
	Power input	(kW)	1,90	2,26	3,35	3,12	3,21	3,21	4,51	4,83	4,83	2 x 2,96	2 x 2,96	2 x 3,07	2 x 3,07
	Max. abs. current	(A)	6,90	6,90	9,00	9,00	9,00	9,00	11,60	11,60	11,60	2 x 7,20	2 x 7,20	2 x 9,00	2 x 9,00
	Speed	(r.p.m.)	1.131	950	964	796	796	796	809	814	814	954	954	957	957
	Code		OPK0676	OPK0679	OPK0683	OPK0686	OPK0683	OPK0683	OPK0688	OPK0688	OPK0688	2 x OPK0681	2 x OPK0681	2 x OPK0683	2 x OPK0683
Option 7: Low flow + low pressure	Available pressure	(mm.w.c.)	8												
	Air flow	(m^3/h)	4.080	5.200	6.800	7.000	7.200	7.200	9.600	10.000	10.000	12.400	12.400	12.800	12.800
	Motor output	(kW)	0,55	0,55	1,10	1,50	1,50	1,50	1,10	1,10	1,10	2 x 0,55	2 x 0,55	2 x 1,10	2 x 1,10
	Power input	(kW)	0,42	0,41	0,89	1,05	1,11	1,11	0,56	0,56	0,56	2 x 0,40	2 x 0,40	2 x 0,78	2 x 0,78
	Max. abs. current	(A)	1,60	1,60	3,20	4,10	4,10	4,10	3,20	3,20	3,20	2 x 1,60	2 x 1,60	2 x 3,20	2 x 3,20
	Speed	(r.p.m.)	710	549	670	701	712	712	358	358	358	431	431	646	646
	Code		OPK0690	OPK0691	OPK0694	OPK0677	OPK0677	OPK0677	OPK0699	OPK0699	OPK0699	2 x OPK0693	2 x OPK0693	2 x OPK0694	2 x OPK0694
Option 8: Nominal flow + low pressure	Available pressure	(mm.w.c.)	8												
	Air flow	(m^3/h)	5.100	6.500	8.500	8.750	9.000	9.000	12.000	12.500	12.500	15.500	15.500	16.000	16.000
	Motor output	(kW)	0,55	0,55	1,10	0,75	1,10	1,10	1,50	1,50	1,50	2 x 1,10	2 x 1,10	2 x 1,10	2 x 1,10
	Power input	(kW)	0,41	0,40	0,80	0,66	0,56	0,56	1,16	0,95	0,95	2 x 0,74	2 x 0,74	2 x 0,80	2 x 0,80
	Max. abs. current	(A)	1,60	1,60	3,20	2,10	3,20	3,20	4,10	4,10	4,10	2 x 3,20	2 x 3,20	2 x 3,20	2 x 3,20
	Speed	(r.p.m.)	549	431	504	380	358	358	430	410	410	500	500	510	510
	Code		OPK0691	OPK0693	OPK0695	OPK0697	OPK0699	OPK0699	OPK0698	OPK0698	OPK0698	2 x OPK0695	2 x OPK0695	2 x OPK0695	2 x OPK0695
Option 9: High flow + low pressure	Available pressure	(mm.w.c.)	8												
	Air flow	(m^3/h)	6.120	7.800	10.200	10.500	10.800	10.800	14.400	15.000	15.000	18.600	18.600	19.200	19.200
	Motor output	(kW)	0,75	1,50	1,10	1,50	1,50	1,50	3,00	3,00	3,00	2 x 1,10	2 x 1,10	2 x 1,10	2 x 1,10
	Power input	(kW)	0,64	1,33	0,86	0,95	1,01	1,01	1,85	2,06	2,06	2 x 0,56	2 x 0,56	2 x 0,56	2 x 0,56
	Max. abs. current	(A)	2,10	4,10	3,20	4,10	4,10	4,10	7,20	7,20	7,20	2 x 3,20	2 x 3,20	2 x 3,20	2 x 3,20
	Speed	(r.p.m.)	613	752	403	410	416	416	486	501	501	358	358	358	358
	Code		OPK0692	OPK0677	OPK0696	OPK0698	OPK0698	OPK0698	OPK0700	OPK0700	OPK0700	2 x OPK0699	2 x OPK0699	2 x OPK0699	2 x OPK0699

Return plug-fan EC (CP / CR / CQ / CT / TP assemblies)

Vectios™ PJ		0090	0120	0140	0160	0180	0190	0200	0220	0240	0280	0320	0360	0380
Nominal air flow	(m^3/h)	5.100	6.500	8.500	8.750	9.000	9.000	12.000	12.500	12.500	15.500	15.500	16.000	16.000
Nominal available static pressure	(mm.w.c.)	12	12	12	15	15	15	20	20	20	20	20	20	25
Number / Diameter	(mm)	1 / 500						2 / 500						
Output	(kW)	2,6						2 x 2,6						
Speed	(r.p.m.)	1.700						1.700						
Maximum absorbed current	(A)	4,0						2 x 4,0						

Note: the value of power input according to the selected flow can be found at our “Selection Software”.

Return plug-fan EC (CW / TW assemblies)

Vectios™ PJ			0090	0120	0140	0160	0180	0190	0200	0220	0240	0280	0320	0360	0380
Nominal air flow		(m^3/h)	5.100	6.500	8.500	8.750	9.000	9.000	12.000	12.500	12.500	15.500	15.500	16.000	16.000
Nominal available static pressure		(mm.w.c.)	12	12	12	15	15	15	20	20	20	20	20	20	25
Nominal pressure (N)	Number / Diameter	(mm)	1 / 500						2 / 500						
	Output	(kW)	2,6						2 x 2,6						
	Speed	(r.p.m.)	1.700						1.700						
	Maximum absorbed current	(A)	4,0						2 x 4,0						
High pressure (H)	Number / Diameter	(mm)	--		1 / 500				--			2 / 500			
	Output	(kW)	--		2,8				--			2 x 2,8			
	Speed	(r.p.m.)	--		1700				--			1.700			
	Maximum absorbed current	(A)	--		4,3				--			2 x 4,3			

Note: the value of power input according to the selected flow can be found at our “Selection Software”.

Rotary heat exchange (CW / TW assemblies)

This rotary recovery unit is used to transfer the sensible and latent heat from the air-conditioned room’s return air to the fresh air used for ventilation, before it’s discharged outdoors.

The return air circulates in half of the heat recovery unit and the ventilation air circulates in the other half, in the opposite direction. As the rotor rotates, very fine channels of air which form the matrix come into contact with the fresh air and the return air in turn, thereby transferring heat and humidity from one to the other.

The efficiency of the recovery depends on the following factors:

- **Wheel diameters:**
  - 800 mm: models 0090 to 0190
  - 1200 mm: models 0200 to 0240
  - 1500 mm: models 0280 to 0380
- **Matrix materials:**
  - Aluminum: sensible heat recovery.
  - Epoxy coated aluminium: sensible heat recovery in aggressive environments.
  - Hybrid wheel: enthalpic recovery.
  - Silicagel coated aluminium: enthalpic recovery with high efficiency in the recovery of latent heat.
- **Channel cross section:**

  The wheel is formed of two panels of aluminium, one smooth and one fluted. The fluted panel can be provided in two different configurations:
  - 2.0 mm cross section: the commonly-used cross section due to its high efficiency and moderate pressure drops.
  - 2.5 mm cross section: low pressure drop. Designed for high frontal speeds with low pressure drops.

The rotary heat exchanger is fitted into a module placed on one side of the unit.

This module features filters on the fresh air intake and the exhaust air outlet: gravimetric filters G4 (default option), G4 with low pressure drop or G4 + M6 (optional).

This assembly can be supplied, in option, with a speed drive for the wheel which avoids the risk of ice forming on the wheel during the defrost operation.

Important: the calculations for the selection of a rotary heat exchanger according to the parameters described above should be done using our “Selection Software”.

Cooling recovery circuit (CR / CT assemblies)

Thermodynamic circuit dedicated to the recovery of the extracted air energy, with independent and proportional control, adapted to the air renewal requirements in order to raise COP, EER and seasonal efficiency of the unit set.

The circuit is composed of:

- Return EC plug-fan.
- Air circuit comprised of coils with copper pipes and aluminium fins.
- Electronic expansion valve.
- Hermetic scroll-type compressor with sound insulation, assembled over antivibration mounts.
- Crankcase heater.
- Four-way cycle reversing valve.
- Anti-acid dehydrator filter.
- High and low pressure transducers.
- Condensates drain pan.

CR assembly scheme

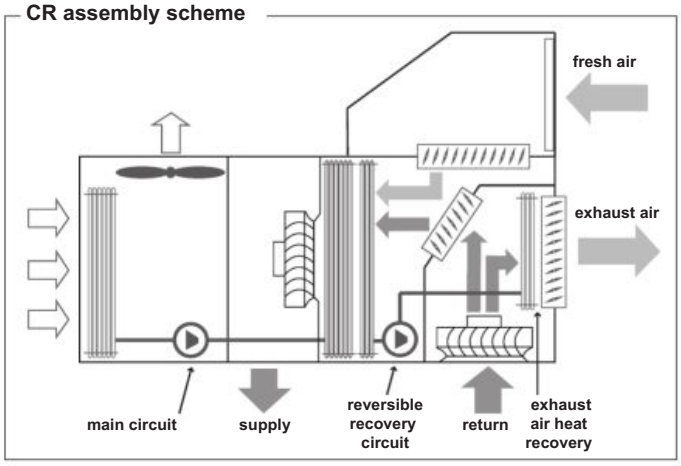

CT assembly scheme

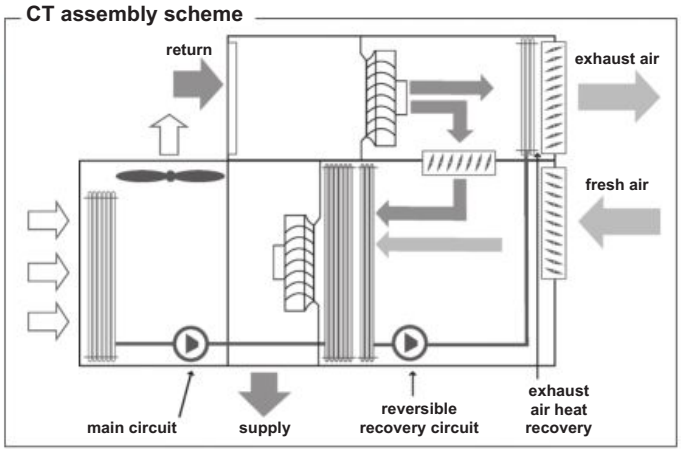

Vectios™ PJ		0090 to 0120	0140 to 0190	0200 to 0240	0280 to 0380
Compressor type		Scroll			
No. of compressors / circuits		1 / 1			
Max. absorbed current	(A)	5,4	7,2	10,1	12,1
Oil type		Copeland 3MAF 32cST, Danfoss POE 160SZ, ICI Emkarate RL 32CF, Mobil EAL Artic 22CC			
Volume of oil	(l)	0,7	1,2	1,7	1,8
Charge of R-410A	(kg)	1,7	2,5	3,0	3,4
Environment impact	(tCO2eq)	3,5	5,2	6,3	7,1

Total cooling capacity with recovery circuit

Vectios™ PJ				0090	0120	0140	0160	0180	0190	0200	0220	0240	0280	0320	0360	0380
Nominal air flow			(m^3/h)	5.100	6.500	8.500	8.750	9.000	9.000	12.000	12.500	12.500	15.500	15.500	16.000	16.000
Outdoor temperature 35ºC / 40% HR Indoor temperature 27ºC / 50% HR	20% fresh air	Pft	(kW)	29,6	36,2	45,7	49,5	54,3	56,7	70,4	75,4	77,9	90,7	94,7	103,5	112,8
		Pfs	(kW)	23,7	29,6	38,1	40,2	42,5	43,4	55,9	59,0	59,9	72,1	73,6	78,2	81,7
		Pa	(kW)	8,5	9,6	11,5	12,8	14,0	14,7	17,8	19,5	20,5	21,7	23,3	25,8	29,0
	40% fresh air	Pft	(kW)	31,3	37,9	48,3	52,0	56,9	59,4	73,7	78,8	81,4	95,2	99,3	108,1	117,7
		Pfs	(kW)	25,0	31,1	39,7	41,8	44,3	45,3	58,8	62,0	62,9	76,0	77,4	82,0	85,6
		Pa	(kW)	8,1	9,3	10,9	12,3	13,5	14,2	17,1	18,9	19,9	20,9	22,6	25,1	28,3
	80% fresh air	Pft	(kW)	33,6	40,3	51,9	55,7	60,8	63,3	78,7	84,0	86,8	102,3	106,4	115,2	125,4
		Pfs	(kW)	27,4	33,6	42,4	44,4	47,0	47,9	62,4	65,8	66,9	82,3	84,1	88,0	92,7
		Pa	(kW)	8,0	9,1	10,6	12,1	13,4	14,0	16,8	18,5	19,6	20,6	22,2	25,0	28,2

Pft: Total gross cooling capacity (sum of the power of the main circuit and the recovery circuit)

Total heating capacity with recovery circuit

Vectios™ PJ				0090	0120	0140	0160	0180	0190	0200	0220	0240	0280	0320	0360	0380
Nominal air flow			(m^3/h)	5.100	6.500	8.500	8.750	9.000	9.000	12.000	12.500	12.500	15.500	15.500	16.000	16.000
Outdoor temperature 6ºC WB Indoor temperature 20ºC	20% fresh air	Pct	(kW)	29,6	35,7	44,1	47,7	52,8	55,5	68,0	73,2	75,9	87,5	91,6	100,6	110,0
		Pa	(kW)	6,6	7,8	9,2	10,2	11,5	12,3	14,6	16,1	16,9	18,6	19,9	22,5	25,6
	40% fresh air	Pct	(kW)	30,9	37,0	45,9	49,6	54,8	64,2	70,6	75,9	78,7	90,7	94,8	103,9	113,4
		Pa	(kW)	6,4	7,5	8,8	9,8	11,0	11,8	14,0	15,4	16,3	17,9	19,1	21,5	24,5
	80% fresh air	Pct	(kW)	32,6	38,8	47,5	52,0	57,4	60,2	74,4	79,7	82,6	95,1	99,3	108,5	118,3
		Pa	(kW)	5,9	6,8	8,1	8,9	10,0	10,8	12,8	14,0	14,8	16,3	17,4	19,6	22,3

Pct: Total gross heating capacity (sum of the power of the main circuit and the recovery circuit)

Auxiliary electrical heaters

Auxiliary electrical heaters, with two power stages and on/off control, for assembly and connection inside the unit.

- Up to 3 values of total power available for each model:

Vectios™ PJ	E0L (Low)	E0N (Nominal)	E0H (High)
0090 to 0120	12 kW	18 kW	unavailable
0140 to 0190	12 kW	18 kW	27 kW
0200 to 0380	18 kW	27 kW	36 kW

- Characteristics:

Total power (kW)	12	18	27	36
Stages power (kW)	6 + 6	9 + 9	9 + 18	18 + 18
Current (A)	17,3	26,0	39,0	52,0
Power supply	400 V / III ph			

Auxiliary hot water coil

Auxiliary hot water coil, with three-way valve and proportional control, for assembly and connection inside the unit.
This option always incorporates an anti-freeze thermostat as safety system.

Vectios™ PJ			0090	0120	0140	0160	0180	0190	0200	0220	0240	0280	0320	0360	0380
Air pressure drop		(mm.w.c.)	2,4	3,5	3,5	3,6	4,3	4,3	3,4	3,6	3,6	3,5	3,7	3,7	3,7
Water 80/60ºC and inlet air 20ºC	Heating capacity	(kW)	27,6	32,0	47,6	48,4	49,2	49,2	95,8	98,3	98,3	129,0	129,0	131,5	131,5
	Water flow	(m^3/h)	1,4	1,6	2,1	2,1	2,1	2,1	2,7	2,8	2,8	3,6	3,6	3,7	3,7
	Water pressure drop	(m.w.c)	0,2	0,3	0,5	0,5	0,5	0,5	0,5	0,5	0,5	0,9	0,9	1,0	0,9
Water 90/70ºC and inlet air 20ºC	Heating capacity	(kW)	34,2	39,8	58,7	59,8	90,8	90,8	118,5	121,5	121,5	158,7	158,7	161,9	161,9
	Water flow	(m^3/h)	1,7	2,0	2,6	2,6	2,6	2,6	3,4	3,4	3,4	4,5	4,5	4,6	4,6
	Water pressure drop	(m.w.c)	0,3	0,4	0,7	0,7	0,8	0,8	0,7	0,7	0,7	1,3	1,4	1,4	1,4

Note: the hot water coil is not compatible with the stop-drop in the indoor coil, the heat recovery coil or the active dehumdification.

Position of the hydraulic connections of the hot water coil

Cross flow assemblies

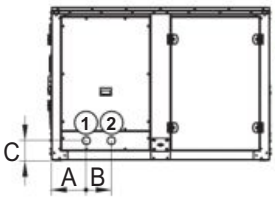

Dimensions (mm)	A	B	C	Ø
0090 to 0190	142	160	158	1 ¼”
0200 to 0240	159	245	158	2”
0280 to 0380	159	245	158	2”

1 Outlet 2 Inlet

Tunnel flow assemblies

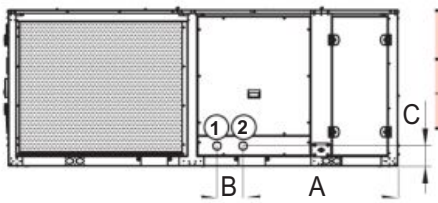

Dimensions (mm)	A	B	C	Ø
0200 to 0240	934	280	158	2”
0280 to 0380	1314	280	158	2”

1 Outlet 2 Inlet

Note: The Input / Output connections of the coil are located inside the unit. The connection can be established via the unit base using flexible tubing or via the side panel. In the above diagrams, the position of the sheet metal precuts is shown on the side panel.

“Great Cold” option (B0C)

Note: on units with the “Great Cold” option, air supply only may be lateral (factory-configured).

- This anti-freeze safety incorporates:
  - Circulation pump.
  - Water temperature sensors located in the inlet and the outlet of the coil.

  Important: this option is mandatory for an outdoor temperature lower than -20ºC WB. Consult for percentages of glycol water above 20%.

- Characteristics of the water circuit:

Vectios™ PJ		0090 to 0200	0220 to 0380
Circulation pump	Motor output (W)	90	140
	Max. absorbed current (A)	0,75	1,15

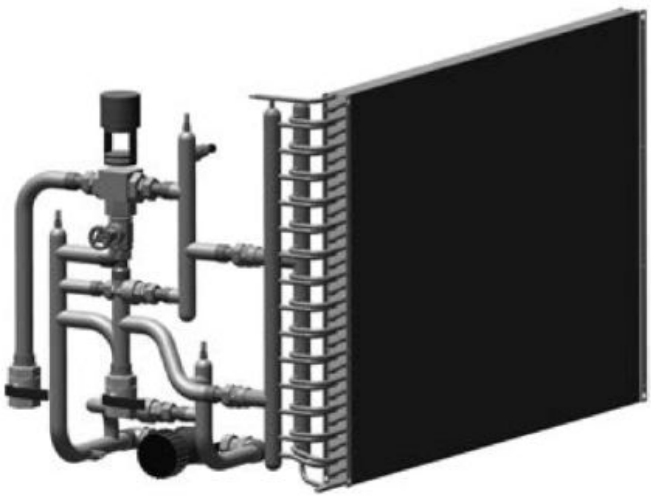

Gas boiler + Auxiliary hot water coil

Natural or propane gas boiler with modulating actuator, in accordance with the Gas Directive 2009/142/EC, mounted on the side of the unit.

EC certification: 0085CP0214.

- Up to 3 values of total power available for each model:

Vectios™ PJ	G1L (Low)	G1N (Nominal)	G1H (High)
0090 to 0190	unavailable	Condexa PRO 40 (coming soon)	Condexa PRO 70
0200 to 0380	Condexa PRO 50 (coming soon)	Condexa PRO 70	Condexa PRO 100

Note: the gas boiler is not compatible with the stop-drop in the indoor coil, the heat recovery coil or the active dehumdification.

- The key features of the boiler are:
  - Type of equipment: B23 - B53 - B53P
  - NOx Class (according to standard EN 297): 5
  - Burner with premixing and modulation technology that allows outputs close to 109% (Hi performance).
  - Heat exchanger made of stainless steel with a low carbon content.
  - Proportional air / gas valve. Low NOx emissions (class 5, according to standard EN 297).
  - Condensate drain with siphon.
  - Forced draught.
  - Electronic ignition.
  - Safety devices: safety thermostat, low water pressure safety switch, flowmeter, Delta-T control, smoke temperature sensor.
  - NTC sensor for boiler water temperature regulation.
  - Working temperature of water from -7ºC to 100ºC. Consult for percentages of glycol water above 20%.
  - Electronic controller with microprocessor and Multifunction LCD display for boiler's control, configuration and diagnostics. Possibility of ModBus communication.
  - The electronic control of the unit will only manage the boiler connection as heating support depending on the ambient conditions.
- The boiler is connected to the hydraulic circuit of the auxiliary hot water coil. The water circuit, installed inside the unit, is composed of:
  - Water coil.
  - Circulation pump.
  - Expansion vessel.
  - Gate valves.
  - Safety valve with a tare value of 4 bar.
  - Automatic air bleeder valve.

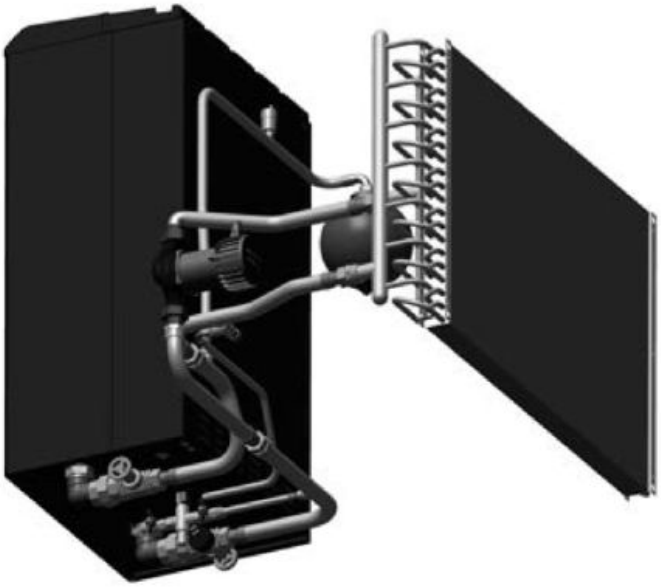

- Characteristics of the water circuit:

Vectios™ PJ		0090 to 0200	0220 to 0380
Expansion vessel	Volume (l)	5	5
	Filling pressure (kg/cm^2)	1,5	1,5
Circulation pump	Motor output (W)	90	140
	Max. absorbed current (A)	0,75	1,15

- Type of gas used depending on the destination country:

Country	Category	Gas	Pressure (mbar)	Gas	Pressure (mbar)
Italy, Ireland, Great Britain, Portugal, Slovenia, Slovakia, Greece	II2H3+	G20	20	G30/G31	28-30/37
Spain	II2H3+	G20	18	G30/G31	28-30/37
Romania, Bulgaria, Turkey, Denmark, Estonia, Sweden, Norway, Latvia, Lithuania, Finland, Russia	II2H3B/P	G20	20	G30	30
Hungary	II2H3B/P	G20	25	G30	30
Poland	II2H3B/P	G20	25	G30	37
Croatia	II2H3B/P	G20	20	G30/G31	30
Holland	II2H3B/P	G25	25	G30	30
Czech Republic, Austria, Switzerland	II2H3B/P	G20	20	G30	50
Luxembourg	II2H3B/P	G20	20	G30	50
	II2E3P	G20	20	G31	37
Belgium	I2E(S)	G20/G25	20/25	--	--
	I3+	--	--	G30/G31	28-30/37
France	II2E+3+,	G20/G25	20/25	G30/G31	28-30/37
Malta, Cyprus, Iceland	I3B/P	--	--	G30	30
Germany	II2ELL3B/P	G20/G25	25	G30	50

■ Technical characteristics of the boiler:

Model			Condexa PRO 40 (coming soon)	Condexa PRO 50 (coming soon)	Condexa PRO 70	Condexa PRO 100
Boiler performance	Total thermal power (Hs)	kW			76/15	108/21,6
	Total thermal power (Hi)	kW			68/14	97/19,4
	Nominal power supplied to the water 100% (80ºC - 60ºC)	kW			66,7	95,2
	Nominal power supplied to the water 100% (50ºC - 30ºC)	kW			73,5	105
	Nominal power supplied to the water 100% (60ºC - 40ºC)	kW			71	101
	Condensate hourly production 100% (50ºC - 30ºC) with gas G20	kg/h			8,5	12,3
	Performance with nominal power (80ºC - 60ºC)	%			98,1	98,1
	Performance with nominal power (50ºC - 30ºC)	%			108,1	108,2
	Performance with nominal power Tm = 50°C (60ºC - 40ºC)	%			104,4	104,1
	Performance with reduced load 30% (80ºC - 60ºC)	%			98,5	98,3
	Performance with reduced load 30% (50ºC - 30ºC)	%			109	109
	Performance with reduced load 30% Tm = 50°C (60ºC - 40ºC)	%			105,3	105
	Losses in enclosure (Tm = 70°C)	%	0,1			
	Energy efficiency marking (Directive 92/42 EC)		★★★★			
Energy efficiency	Seasonal energy efficiency class in heating				A	A
	Seasonal energy efficiency in heating	%			92,7	92,7
Gas supply	Gas category		II2H3+			
	Natural Gas consumption (G20) (nominal / minimum)	m^3/h			7,2/1,4	10,3/2,1
Electrical data	Power supply		230 Vac - 50 Hz			
	Power input at 100%	W			77	203
	Power input at 30%	W			30	31
	Power input in stand-by	W			13	6
	Ingress protection rating		IP X5D			
	Operating temperatures		de -15°C to +70°C			
Connections	Ø Gas supply				G1”	G1”
	Ø Flue outlet	mm			DN80	DN110
	Ø Condensate drain	mm			25	25
Heating circuit	Control of heating temperature (min. / max.)	ºC	20 / 80			
	Working pressure (max. / min.)	bar	6 / 0,7			

Heat recovery coil

The function of the heat recovery coil is to pre-heat the air that will pass through the main indoor coil. For this, it uses the temperature of an outdoor water installation. This function is managed by the unit’s electronic control.

The coil is supplied with a 3-way valve for installation outside the unit but manages by the unit’s electronic control.

This option is compatible with C0, CS, CF, CQ, CT, T0 and TS assemblies.

Note: the heat recovery coil is not compatible with the hot water coil, the gas boiler or the gas burner.

Vectios™ PJ			0090	0120	0140	0160	0180	0190	0200	0220	0240	0280	0320	0360	0380
Air pressure drop		(mm.w.c.)	2,6	3,9	5,0	5,5	5,7	5,7	4,3	4,6	4,6	4,5	4,5	4,7	4,7
Water 35/30ºC (30% MEG) and inlet air 20ºC	Heating capacity	(kW)	11,19	13,01	16,92	17,53	17,75	17,75	23,76	24,27	24,27	32,77	32,77	33,37	33,37
	Water flow	(m^3/h)	2,08	2,40	3,20	3,30	3,30	3,30	4,40	4,60	4,60	6,08	6,08	6,30	6,30
	Water pressure drop	(m.w.c)	1,2	1,6	2,8	3,0	3,1	3,1	1,9	2,0	2,0	4,0	4,0	4,1	4,1
Water 35/30ºC (30% MEG) and inlet air 15ºC	Heating capacity	(kW)	16,89	19,63	25,26	26,18	26,55	26,55	35,65	36,52	36,52	48,55	48,55	49,44	49,44
	Water flow	(m^3/h)	2,08	2,40	3,20	3,30	3,30	3,30	4,40	4,60	4,60	6,08	6,08	6,30	6,30
	Water pressure drop	(m.w.c)	2,6	3,3	5,8	6,2	6,3	6,3	4,0	4,1	4,1	8,2	8,2	8,5	8,5

Water (inlet air 20ºC)	30/35ºC	*/40ºC	*/45ºC
Correction coefficients	1,00	1,35	1,70

% of MEG	10%	20%	30%
Correction coefficients	1,06	1,03	1,00

Position of the hydraulic connections of the heat recovery coil

Cross flow assemblies

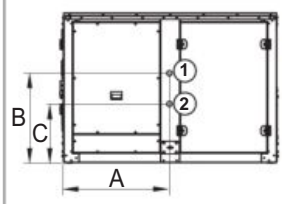

Dimensions (mm)	A	B	C
0090 to 0190	872	721	443
0200 to 0240	1099	721	443
0280 to 0380	1099	721	443

(1) Outlet, Ø1/2” (2) Inlet, Ø1/2”

Tunnel flow assemblies

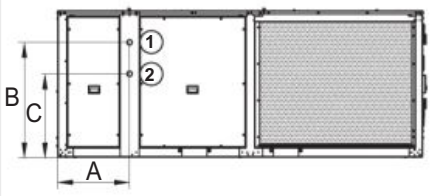

Dimensions (mm)	A	B	C
0200 to 0240	534	721	443
0280 to 0380	914	721	443

(1) Outlet, Ø1/2” (2) Inlet, Ø1/2”

Gas burner

Natural or propane gas burner with modulating actuator, in accordance with the Gas Directive 2009/142/EC, installed inside a pre-assembly roofcurb. The PJ unit with lower air supply will be placed on this roofcurb.

EC certification: 0694CP1457.

- Up to 3 values of total power available for each model:

Vectios™ PJ	G0L (Low)	G0N (Nominal)	G0H (High)
0090 to 0190	PCH020	PCH034	PCH045
0200 to 0240	unavailable	PCH065	PCH080
0280 to 0380	unavailable	PCH080	PCH105

Note: the gas burner is not compatible with the heat recovery coil.

- The key features of the boiler are:
  - Condensation boiler with premixing and modulation technology that allows outputs close to 109% (Hi performance).
  - The premixed burner, in combination with the air/gas valve, ensures a “clean” combustion. Low NOx emissions (class 5, according to standard EN 297).
  - The combustion chamber and the burner are entirely made of stainless steel.
  - Electronic controller with microprocessor and multifunction LCD display, located inside the burner, for burner’s control, configuration and diagnostics.
  - The electronic control of the unit will only manage the burner connection as heating support depending on the ambient conditions.

Note: It’s recommended to use the clogged filter pressostat (optional)in units with gas burner.

Model			PCH020		PCH034		PCH045		PCH065		PCH080		PCH105	
Type of equipment			B23P - B53P - C13 - C43 - C53 - C63 - C83											
EC certification		PIN.	0694CP1457											
NOx Class		Val	5											
Heater performance	Range		Min.	Max	Min.	Max	Min.	Max	Min.	Max	Min.	Max	Min.	Max
	Thermal output (Hi)	kW	4,75	19,00	7,60	34,85	8,50	44,00	12,40	65,00	16,40	82,00	18,00	100,00
	Useful thermal output	kW	4,97	18,18	8,13	33,56	9,00	42,40	13,40	62,93	17,77	80,03	19,63	97,15
	Hi performance (L.C.V.)	%	104,63	95,68	106,97	96,30	105,88	96,37	108,06	96,82	108,35	97,60	109,06	97,15
	Hs performance (H.C.V.)	%	94,26	86,20	96,37	86,76	95,39	87,36	97,36	87,22	97,62	87,93	98,25	87,52
	Flue losses with burner off (Hi)	%	0,4	4,3	0,6	3,7	0,5	3,7	0,2	3,2	0,3	2,4	0,2	2,8
	Flue losses with burner off (Hi)	%	<0,1											
	Losses in enclosure ①		0%											
	Max. condensation ②	l/h	0,4		0,9		1,1		2,1		3,3		2,7	
Exhaust gases - Polluting emissions	Carbon monoxide - C0 - (0% of O2) ③	ppm	< 5											
	Nitrogen oxides - NOx - (0% of O2) ④		40 mg/kWh - 22,28 ppm		41 mg/kWh - 23,24 ppm		35 mg/kWh - 19,84 ppm		40 mg/kWh - 22,68 ppm		34 mg/kWh - 19,27 ppm		45 mg/kWh - 25,51 ppm	
	Available pressure at flue	Pa	80		90		100		120					
Electrical data	Power supply		230 Vac - 50 Hz monofásico											
	Power input		12	45	11	74	24	82	15	97	40	123	20	130
	Power input in stand-by		<5											
	Ingress protection rating		IP X5D											
	Operating Temperatures		from -15°C to +40°C											
Connections	Ø gas connection	GAS	UNI/ISO 7/1- 3/4”											
	Ø intake/exhaust pipes	mm	80/80											

① Enclosure losses match those of the machine housing the PCH.
② Max. condensation produced acquired from testing 30%Qn.
③ Value referenced to cat. H (G20)
④ Weighted value to EN1020 ref. to class H (G20), referred to Hi (L.C.V.).

■ Gas setting:

Gas type	Gas settings		PCH020		PCH034		PCH045		PCH065		PCH080		PCH105	
			min.	max.	min.	max.	min.	max.	min.	max.	min.	max.	min.	max.
G20	Air supply pressure	mbar	20 [min 17-max 25]											
	Ø pilot nozzle	mm	0,7											
	Gas consumption (15°C-1013mbar)	m3/h	0,51	2,01	0,80	3,69	0,90	4,66	1,31	6,88	1,74	8,68	1,90	10,58
	Carbon dioxide - CO_2 content	%	8,8	9,1	8,7	9,1	8,7	9,1	8,7	9,1	8,7	9,1	8,5	9,1
	Fumes temperature	ºC	39	113	31	94	30	94	31	86	26,5	70	28	80
	Fume mass flow rate (max.)	kg/h	31		57		72		107		135		165	
	Gas butterfly valve	mm	5,8		7,4		7,5		11,0		12,2		15,8	
G25	Air supply pressure	mbar	25 [min 17-max 30] (20 for Germany)											
	Ø pilot nozzle	mm	0,7 (0,75 for Germany)											
	Gas consumption (15°C-1013mbar)	m3/h	0,59	2,34	0,93	4,29	1,05	5,41	1,53	8,00	2,02	10,1	2,21	12,30
	Carbon dioxide - CO_2 content	%	8,8	9,0	8,6	9,0	8,8	8,9	8,8	9,2	8,6	8,9	8,8	9,0
	Fumes temperature	ºC	39	113	31	94	30	94	31	86	26,5	70	28	80
	Fume mass flow rate (max.)	kg/h	--											
	Gas butterfly valve	mm	Not necessary											
G30	Air supply pressure	mbar	30 [min 25-max 35] - 50 [min 42,5-max 57,5]											
	Ø pilot nozzle	mm	0,51											
	Gas consumption (15°C-1013mbar)	m3/h	0,40	1,58	0,63	2,90	0,71	3,65	1,03	5,39	1,36	6,80	1,49	8,30
	Carbon dioxide - CO_2 content	%	10,8	11,4	10,8	11,5	10,8	10,9	10,7	11,3	11,2	11,6	10,9	11,2
	Fumes temperature	ºC	39	113	31	94	30	94	31	86	26,5	70	28	80
	Fume mass flow rate (max.)	kg/h	--											
	Gas butterfly valve	mm	3,7		5,0		5,2		6,5		7,0		9,3	
G31	Air supply pressure	mbar	30 [min 25-max 35] - 37 [min 25-max 45] - 50 [min 42,5-max 57,5]											
	Ø pilot nozzle	mm	0,51											
	Gas consumption (15°C-1013mbar)	m3/h	0,39	1,55	0,62	2,85	0,70	3,60	1,01	5,31	1,34	6,70	1,47	8,18
	Carbon dioxide - CO_2 content	%	9,3	9.,8	9,2	9,7	9,3	9,4	9,4	9,6	9,3	9,6	9,1	9,6
	Fumes temperature	ºC	39	113	31	94	30	94	31	86	26,5	70	28	80
	Fume mass flow rate (max.)	kg/h	24		45		58		84		107		130	
	Gas butterfly valve	mm	3,7		5,0		5,2		6,5		7,0		9,3	

■ Type of gas used depending on the destination country:

Country	Category	Gas	Pressure (mbar)	Gas	Pressure (mbar)
Austria, Switzerland	II2H3B/P	G20	20	G30/G31	50
Belgium < 70kW	I2E(S)B,I3P	G20/G25	20/25	G31	37
Belgium > 70kW	I2E(R)B,I3P	G20/G25	20/25	G31	37
Germany	II2ELL3B/P	G20	20	G30/G31	50
Denmark, Finland, Greece, Sweden, Norway, Italy, Czech Republic, Estonia, Lithuania, Slovenia, Albania, Macedonia, Bulgaria, Romania, Croatia, Turkey, Azerbaijan	II2H3B/P	G20	20	G30/G31	30
Spain, United Kingdom, Ireland, Portugal, Slovakia	II2H3P	G20	20	G31	37
France	II2Esi3P	G20/G25	20/25	G31	37
Luxembourg	II2E3P	G20/G25	20	G31	37/50
Netherlands	II2L3B/P	G25	25	G30/G31	50
Hungary	II2HS3B/P	G20/G25.1	25	G30/G31	30
Cyprus, Malta	I3B/P	--	--	G30/G31	30
Latvia	I2H	G20	20		
Iceland	I3P	--	--	G31	37
Poland	II2E3B/P	G20/G2.350 (*)	20/13	G30/G31	37
Russia	II2H3B/P	G20	20	G30/G31	30

(*) Consult the available burners with G2.350.

Recommended service clearance

Vectios™ PJ - 0090 to 0190: C0, CS, CK, CA, CP, CR, CQ and CT assemblies

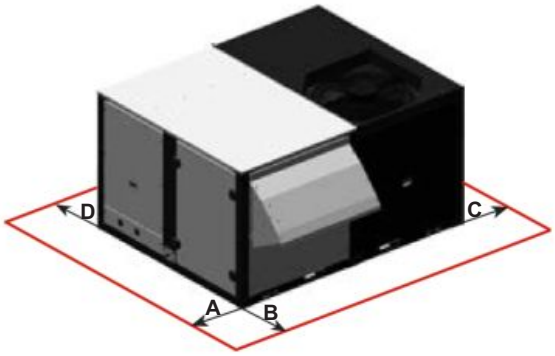

Distances	A	B	C	D
0090 to 0190 (mm)	1.200	1.000	1.000	1.600

Vectios™ PJ - 0090 to 0190: CW assembly

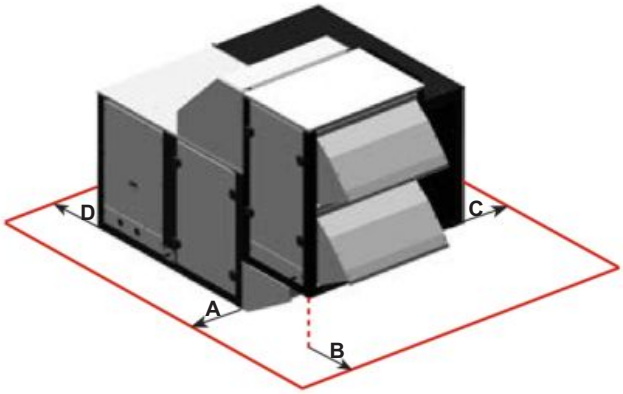

Distances	A	B	C	D
0090 to 0190 (mm)	1.200	1.000	1.000	1.600

Vectios™ PJ - 0200 to 0380: C0, CS, CK, CA, CP, CR, CQ and CT assemblies

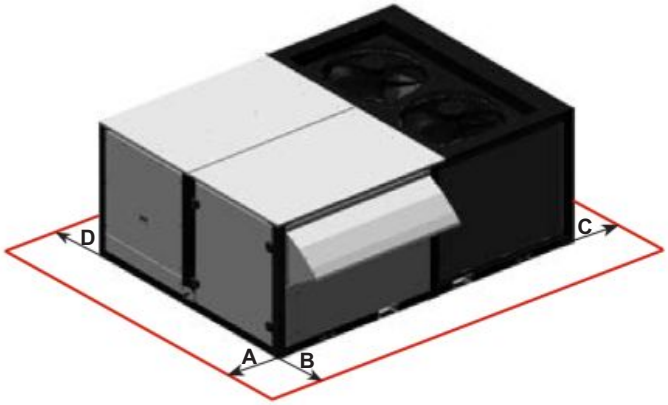

Distances	A	B	C	D
0200 to 0240 (mm)	1.600	1.000	1.000	1.000
0280 to 0380 (mm)	2.000	1.000	1.000	1.000

Vectios™ PJ - 0200 to 0380: CW assembly

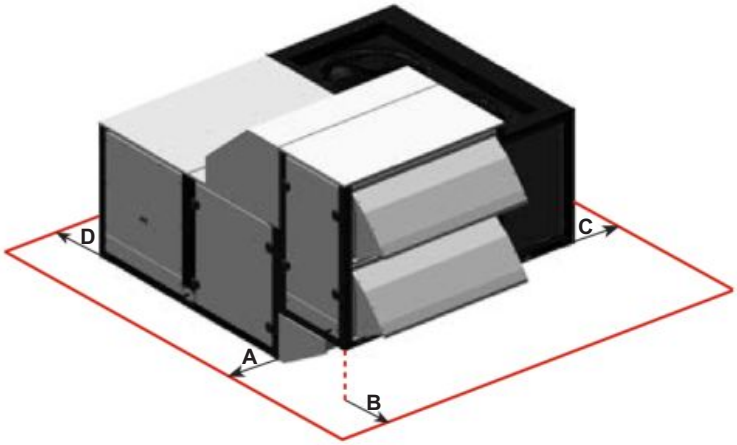

Distances	A	B	C	D
0200 to 0240 (mm)	1.600	1.000	1.000	1.000
0280 to 0380 (mm)	2.000	1.000	1.000	1.000

Note: Unit not designed to have overhead obstruction.

Recommended service clearance

Vectios™ PJ - 0200 to 0380: T0 and TS assemblies
Vectios™ PJ - 0280 to 0380: TP assembly

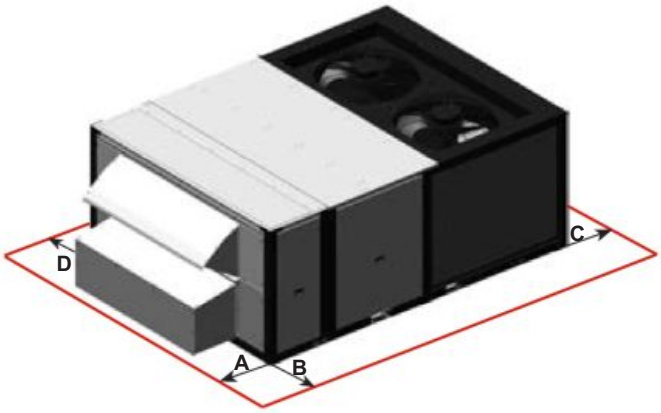

Distances	A	B	C	D
0200 to 0240 (mm)	1.000	1.000	1.300	2.200
0280 to 0380 (mm)	1.000	1.000	1.600	2.200

Vectios™ PJ - 0200 to 0240: TP assembly

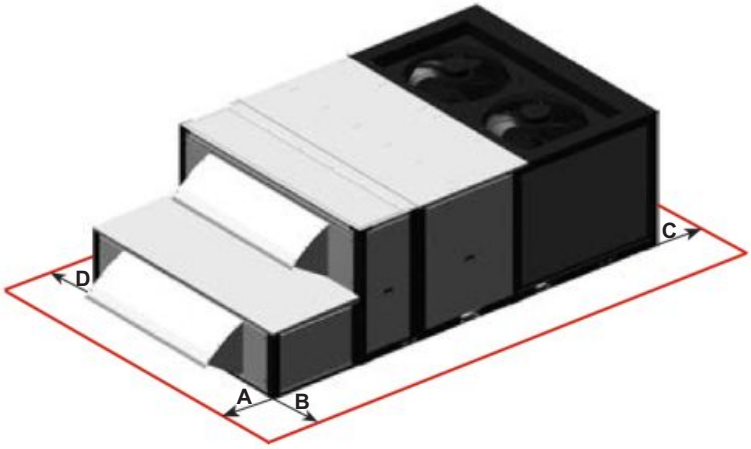

Distances	A	B	C	D
0200 to 0240 (mm)	1.000	1.000	1.300	2.200

Vectios™ PJ - 0200 to 0380: TW assembly

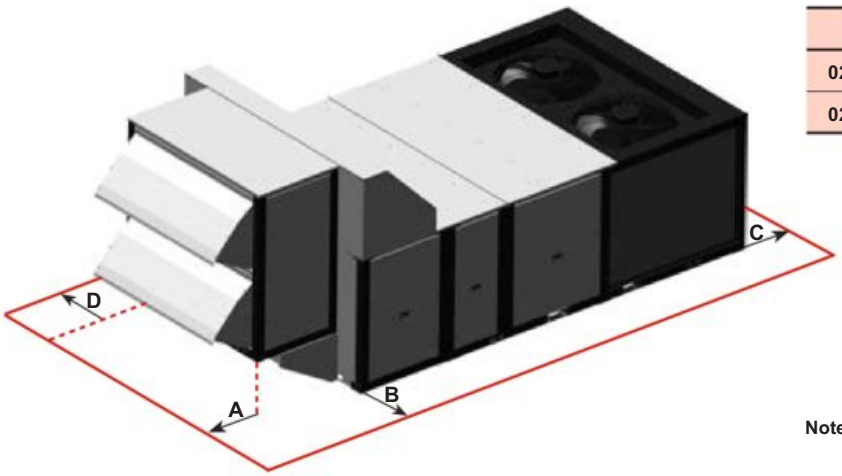

Distances	A	B	C	D
0200 to 0240 (mm)	1.000	1.000	1.300	2.200
0280 to 0380 (mm)	1.000	1.000	1.600	2.200

Note: Unit not designed to have overhead obstruction.

PRE-ASSEMBLY ROOFCURBS

Adjustable roofcurbs (for "Cross Flow" assemblies)

- (2) Standard indoor air circulation
- (6) Lower air supply
- (8) Lower air return

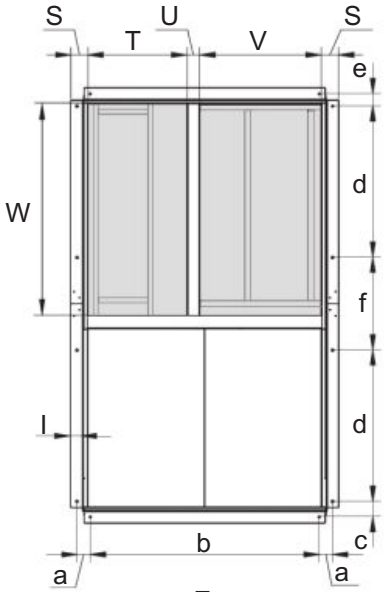

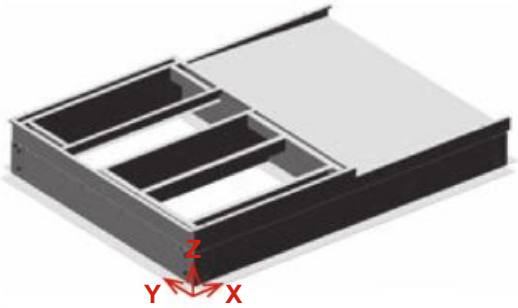

PJ roofcurb	Weight (kg)	Centre of gravity (mm)			Maximum slope	
		X	Y	Z	a	b
0090 to 0190	145	864	870	194	4º (7,0%)	3º (5,1%)
0200 to 0240	205	1.422	1.100	202	4º (7,0%)	3º (5,5%)
0280 to 0380	237	1.757	1.102	200	4º (7,0%)	2º (4,0%)

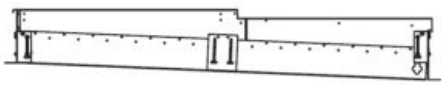

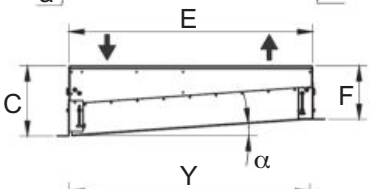

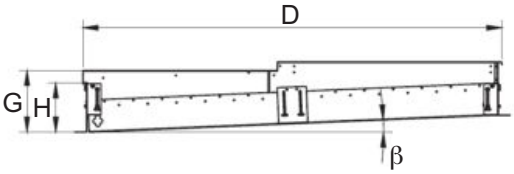

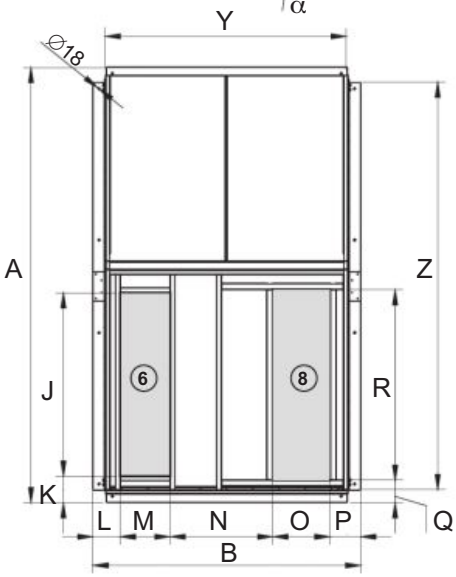

Dimensions	A	B	C	D	E	F	G	H	I	J	K	L	M	N	O	P
0090 to 0190 (mm)	2.163	1.759	547	2.026	1.560	440	477	375	95	848	143	183	297	721	376	182
0200 to 0240 (mm)	2.933	2.205	578	2.796	2.006	440	508	406	95	1.210	175	226	410	846	470	253
0280 to 0380 (mm)	3.586	2.205	578	3.450	2.006	440	508	406	95	1.510	219	226	410	846	470	253

Dimensions	Q	R	S	T	U	V	W	Y	Z	à	b	c	d	e	f
0090 to 0190 (mm)	148	830	142	817	100	558	907	1.539	1.938	110	1.439	123	919	101	0
0200 to 0240 (mm)	165	1.230	142	817	100	1.004	1.349	1.985	2.707	110	1.885	125	1.303	101	0
0280 to 0380 (mm)	184	1.570	142	817	100	1.004	1.749	1.985	3.358	110	1.885	127	1.247	101	764

Note: Drawings without scale. Refer to the certified dimensional drawings available on request, when designing an installation.

PRE-ASSEMBLY ROOFCURBS

Adjustable roofcurbs with gas burner (for "Cross Flow" assemblies)

- Standard indoor air circulation
- (6) Lower air supply
- (8) Lower air return
- (15) Burner drainage 1/2"M
- (16) Gas supply 3/4"M
- (17) Flue outlet, internal Ø 80mm (Flue connection)

Important : The flue of the gas burner is not supplied with the unit. Its design and installation is the responsibility of the installer and must comply with all the directives and regulations in force in the installation location.

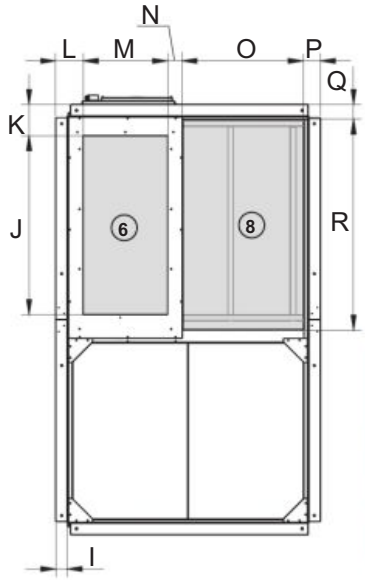

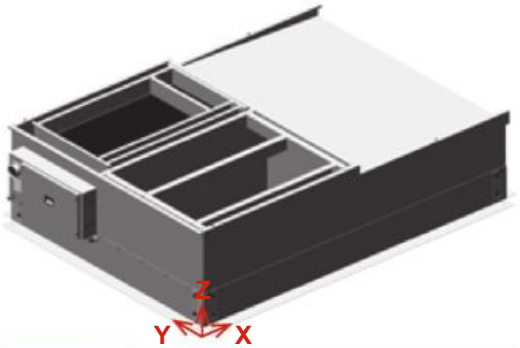

PJ burner roofcurb	Weight (kg)	Centre of gravity (mm)			Maximum slope	
		X	Y	Z	a	b
0090 to 0190	284	885	881	338	4º (7,0%)	3º (5,1%)
0200 to 0240	411	1.214	1.277	344	4º (7,0%)	3º (5,5%)
0280 to 0380	483	1.492	1.289	348	4º (7,0%)	2º (4,0%)

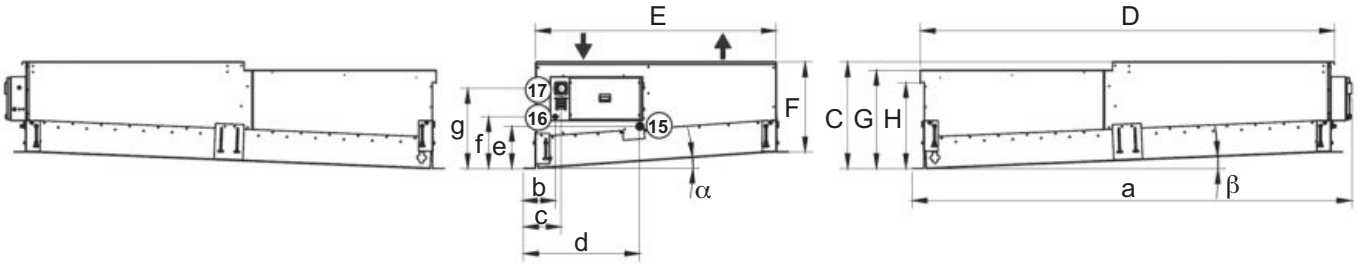

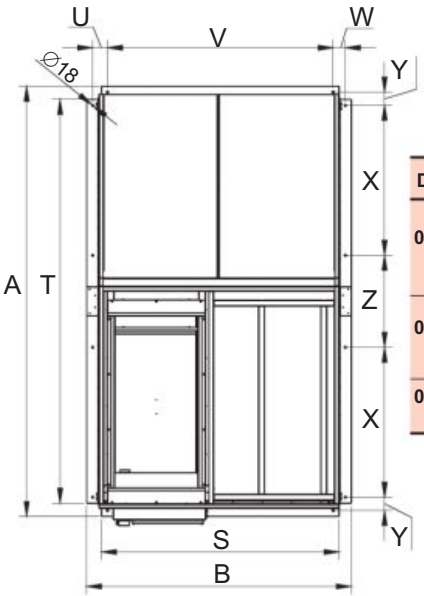

Dimensions	Burner	a	b	c	d	e	f	g
0090 to 0190 (mm)	PCH020 PCH034	2.239	313	364	862	321	400	635
	PCH045	2.239	313	364	933	321	400	635
0200 to 0240 (mm)	PCH065	3.009	263	314	883	354	433	668
	PCH080	3.009	263	314	968	354	433	668
0280 to 0380 (mm)	PCH080 PCH105	3.663	263	314	968	354	433	668

Dimensions	A	B	C	D	E	F	G	H	I	J	K	L	M	N	O	P	Q	R	S	T	U	V	W	X	Y	Z
0090 to 0190 (mm)	2.163	1.759	857	2.026	1.560	750	787	685	95	770	261	142	686	231	558	142	133	907	1.535	1.943	122	1.435	101	922	110	0
0200 to 0240 (mm)	2.933	2.205	890	2.796	2.006	750	820	718	95	1.219	261	230	619	210	1.004	142	133	1.349	1.980	2.713	124	1.880	101	1.307	110	0
0280 to 0380 (mm)	3.586	2.205	890	3.450	2.006	750	820	718	95	1.491	260	229	704	126	1.004	142	133	1.749	1.980	3.366	124	1.880	101	1.250	110	766

Note: Drawings without scale. Refer to the certified dimensional drawings available on request, when designing an installation.

This document is non-contractual. As part of its policy of continual product improvement, CIAT reserves the right to make any technical modification it feels appropriate without prior notification.
Ref.: NA19.757D

SPACE PF

Compact air-air rooftop units

Packaged unit ***all in one***
Haute ***efficacité***
Configuration ***flexibility***
Plug Fan *with EC HEE motor*

Cooling capacity: *92,8 to 287,0 kW*
Heating capacity: *99,3 to 290,7 kW*

Cooling only | **Cooling & heating** | **Heat recovery** | **Air filtration** | **Free cooling** | **Dehumidification** | **R410A**

EUROVENT CERTIFIED PERFORMANCE
www.eurovent-certification.com

Description

The **Space range** are compact, horizontal and autonomous air to air units, rooftop-type design. They are equipped with all the components required for the correct air conditioning to the installation.

- **RPF series:** Units for **cooling** operation.
- **IPF series:** Units for **reversible heat pump** operation.

The unit is connected directly to an air distribution ductwork without additional elements or equipment, pipes, cables, etc. taking up no floor space at all. This design reduces the cost of installation, facilities connections and ensures reliable operation.

The range of capacities of these units allows for the air conditioning of medium and large surface areas used for business or industry.

A vast number of options meet many operating requirements, such a:

- Recovery of the extracted air energy.
- Free-cooling.
- Air renewal.
- Indoor air quality control.
- Air filtration.
- Auxiliary devices for heating.
- Extension of operating limits for adaptation to extreme temperatures.

These units are equipped with electronic axial fans in the outdoor circuit, electronic plug-fans in the indoor circuit, air coils, hermetic scroll compressors and electronic control with microprocessor, optimized components for the refrigerant R-410A.

All of the units are tested and checked in the factory.

Range

RPF - IPF series	Models	Dimensions L x W x H
2 circuits / 4 compressors	415 - 480	3326 x 2205 x 2095 (mm)
	420 - 485 - 540 - 600	4816 x 2205 x 1795 (mm)
	650 - 720	4816 x 2205 x 2095 (mm)
4 circuits / 4 compressors	840 - 960	4816 x 2205 x 2095 (mm)
	1100 - 1200	6316 x 2205 x 2095 (mm)

Remarque : Dimensions pour la configuration standard.

Compliance

- Machinery Directive 2006/42/EC (MD)
- Electromagnetic Compatibility Directive 2014/30/EU (EMC)
- Low Voltage Directive 2014/35/EU (LVD)
- Pressure Equipment Directive 2014/68/EU (Category 2) (PED)
- RoHS Directive 2011/65/EU (RoHS)
- Eco-design Directive 2009/125/EC (Eco-design)
- Energy Labelling Directive 2017/1369/EU (Eco-labelling)
- Harmonised Standard: EN 378-2:2012 (Refrigerating systems and heat pumps - Safety and environmental requirements).

Operation limits

Inlet air conditions		Cooling	Heating
Indoor coil	Minimum	13ºC WB	10ºC
	Maximum	24ºC WB	27ºC
Outdoor coil	Minimum	12ºC ❶	-12ºC WB ❷
	Maximum	48ºC	15ºC WB

With a condensation pressure control operating down to -10ºC.
❶ When the outdoor temperature is usually below 5ºC WB, the installation of a
❷ support element is recommended.

Unit components

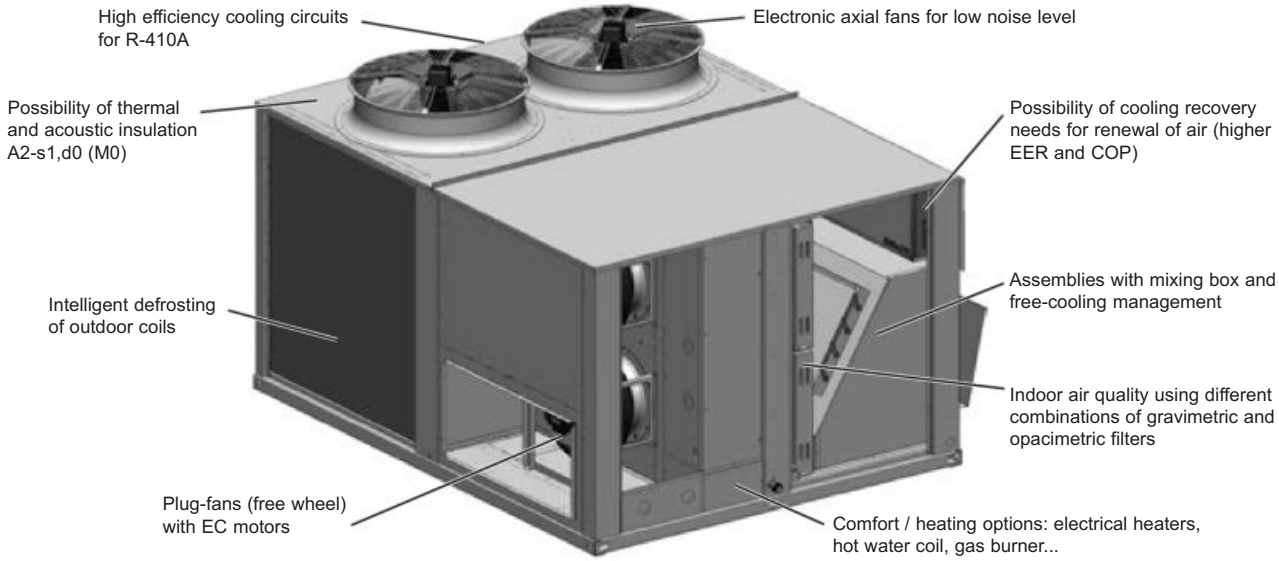

Casing

- Casing made of galvanised steel metal with polyester paint, white colour RAL 7035. Thermal insulation, 9 mm thick, with B-s3,d0 (M1) fire classification.
- Self-supporting frame. Hinges + quarter-turn latches mounted on the access panels to filters, supply fans, compresssors and electrical cabinet.

Outdoor unit

- EC electronic axial fans which adapt their rotation speed to the installation's requirements, thereby reducing electricity consumption, the sound level at partial charge and improving the unit's average seasonal efficiency.
- Coils with copper pipes and aluminium fins.

Unité intérieure

- EC electronic supply plug-fans directly coupled with variable control speed and flow rate controller. In tertiary sector installation, a high percentage of the annual air conditioning energy consumption comes from the use of fans for transporting air. Using fans which are more efficient has a direct impact on reducing consumption. Plug-fans with direct drive and variable speed offer the following advantages:
  - Elimination of friction losses during transmission thanks to the direct drive.
  - Greater aeraulic efficiency of the rotor (reactive blades with an optimized profile), running at very high operating pressures.
  - Greatly increased motor efficiency. Permanent magnets DC motors activated using electronic switching integrated into the motor itself.
  - Variable speed to ensure a constant supply air flow rate, independent of the filters clogging level.
  - Measuring the flow rate thought a calibrated section at the fan intake and a differential pressure sensor allows the control to handle the flow rate reliably and precisely in both on CAV and VAV systems.
- Reusable air filters, mounted on a frame.
- Coils with copper pipes and aluminium fins.
- Condensates drain pan.

Cooling circuit

- Hermetic scroll-type compressors with sound insulation, assembled over antivibration mounts. Control of phase equilibrium and the direction of rotation.

  Models 415 to 720 in tandem design which improves the management of stages, and therefore the energy efficiency of the unit.

- Crankcase heater
- Thermostatic expansion valves with external equalisation.
- Four-way cycle reversing valves (heat pump units).
- Acid-resistant filters dryer.
- Cooling design based on 2-air volumes.

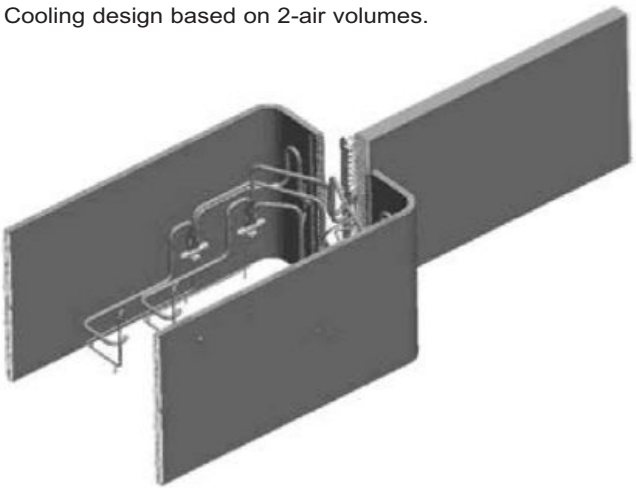

Protections

- High and low pressure pressostats.
- Compressor discharge temperature control.
- Main door switch.
- Magnetothermic protection switches for the compressor(s) power line and fan motor.
- Automatic switch in the control circuit.

Electrical cabinet

- Complete and fully wired electrical cabinet. Insulated panel cover to prevent condensation. Forced ventilation of the electrical cabinet. Protection IP55.
- Transformer for power supply without neutral in electrical panel.
- Main ground connection.
- Compressor and fan motor contacts.

CIATrtc electronic control

The **CIATrtc** control consist of a µPC MEDIUM control board, sensors, a pGD1 graphic terminal and a TCO user terminal (optional).

This system uses a RS485 field-bus to manage additional components.

A BMS card (optional) allows the control board to be connected to a centralised technical management system.

It also manages a local connection between units through a pLAN network (µPC MEDIUM Local Area Network), allowing data and information to be exchanged between units, for a maximum of 15 units.

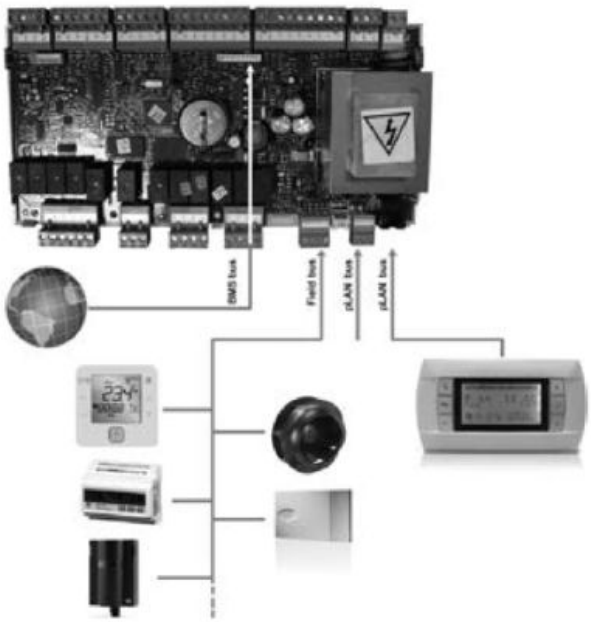

Main functions:

- Selection of setpoint and operating mode: HEATING / COOLING / AUTO / VENTILATION.
- Continuous control of the operating parameters.
- Display of the values measured by the sensors.
- Compressors time delays.
- Temporisations des compresseurs.
- Defrosting management (in heat pump units).
- Control of the supply air temperature.
- All-seasons operation via the condensation and evaporation pressure control.

  The management of the unit in cooling mode is based on the principle of a high floating pressure. The condensation pressure setpoint is continually calculated depending on the outdoor temperature. This pressure is regulated by adjusting the air flow on the oudoor fans.
- Setpoint compensation based on the outdoor temperature.
- Hourly and weekly schedule.
- Fire protection.
- Diagnosis of faults and general alarm.

Optional functions:

This control is used to manage addition components such as:

- External air damper for the renewal of fresh air, depending on the temperature of the mixed air or depending on the air quallity sensor.
- Mixing box for thermal, enthalpic or thermoenthalpic free-cooling.
- Cooling circuit for the recovery of the extracted air energy.
- Rotary heat exchanger with proportional or on/off control.
- Auxiliary electrical heaters: two-stage with on/off control or single-stage with proportional control.
- Hot water coil with 3-way valve, with proportional or on/off control.
- Gas burner with proportional control.
- Humidifier with proportional or on/off control.
- Air flow rate controller (with centrifugal fans).
- Clogged filter pressostat.
- Smoke detection station.
- Refrigerant leak detector.
- Air quality sensor for measuring CO2 and/or volatile compounds.
- Energy meter and and calculation of the cooling and heating capacities.
- Zoning into 2 areas with dampers.

pGD1 terminal:

This terminal, fitted on the electrical cabinet, is very easy to use. It provides detailed explanations of control in easy to understand English. No decoding is required.

Only 6, large, easy-to-use buttons are required to maneuver through the entire menus.

This terminal is used to:

- Carry out initial programming of the unit.
- Modify operating parameters.
- Switch the unit ON / OFF.
- Select the operating mode.
- Adjust the setpoints.
- Display the variables controlled and sensor values measured.
- Display the current alarms and their historical record.

TCO user terminal (optional):

This terminal can be installed on the electrical cabinet, instead of pGD1 terminal. In this case, the remote connection of the pGD1 terminal is posible. Please consult “Control options”.

TCO terminal is used to:

- Switch the unit ON / OFF.
- Select the operating mode.
- Adjust the setpoints.
- Display the installation’s temperatures and humidity, outdoor temperature, supply air temperature, CO_2 sensor and opening of the outdoor damper.
- Display alarms codes.

FACTORY OPTIONS AND ACCESSORIES

Configuration options

(Depending on the indoor air circulation)

Montage	Légende
Mwxy Soufflage d´air (0 : standard, 1 : option, 2 : option) Reprise d´air (0 : standard, 1 : option, 2 : option) Type de montage	I = Soufflage d´air R = Reprise d´air N = Entrée d´air neuf E = Extraction d´air

Standard assembly

- **M0 assemblies:** Change of supply and/or return air position in the indoor circuit.

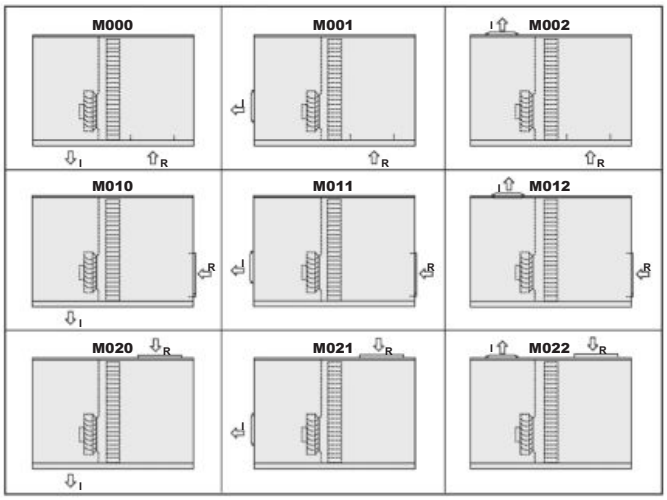

Assemblies with mixing box and free-cooling

- **MS assemblies:** Fresh air intake with damper, interlocked with return damper (mixing box of 2 dampers).

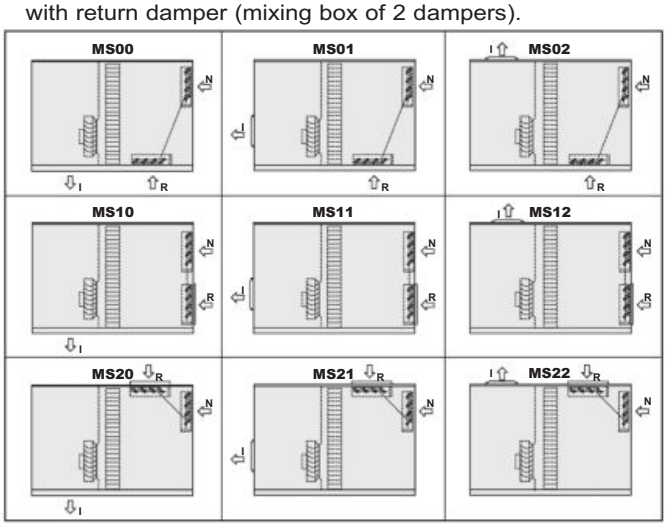

- **ME assemblies:** Axial air extraction fan (mixing box of 3 dampers).

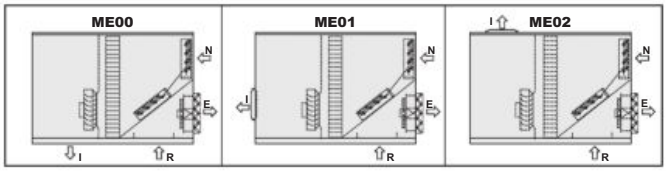

- **MA assemblies:** Axial return and air extraction fan (mixing box of 3 dampers).

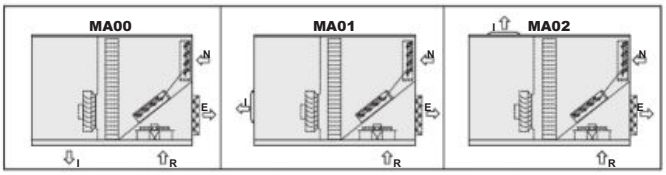

- **MC0 assemblies:** Electronic lower EC plug-fan (mixing box of 3 dampers).

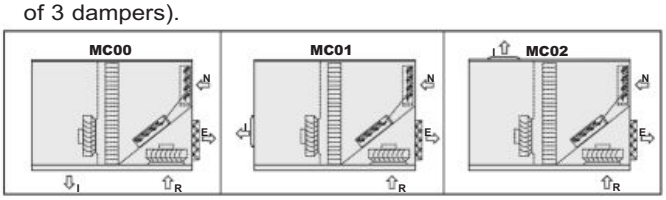

- **MRC0 assemblies:** Lower EC plug-fan (mixing box of 3 dampers) + cooling recovery circuit

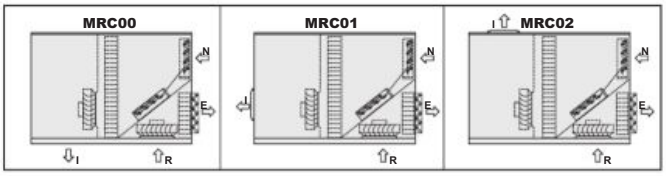

- **MC1 assemblies:** EC plug-fan or centrifugal fan in top box (mixing box of 3 dampers).

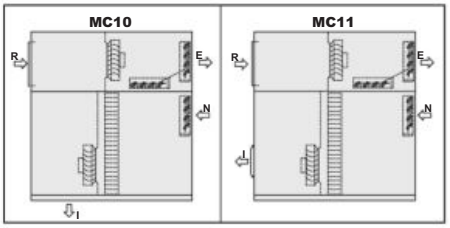

- **MRC1 assemblies:** EC plug-fan or centrifugal fan in top box (mixing box of 3 dampers) + cooling recovery circuit.

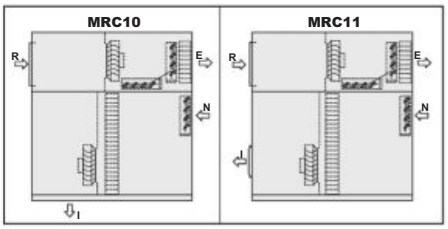

- **MWC1 assemblies (models 415 to 960):** EC plug-fan in top box (mixing box of 3 dampers) + rotary heat exchanger.

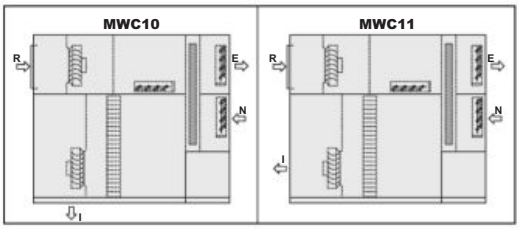

External environment options

Temperature

- Thermal and acoustic insulation 50 mm thick, with fire classification Euroclase A2-s1, d0 (M0).

Cover loss:

Conditions	Winter	
Indoor	20ºC	50% RH
Outdoor	-20ºC	94% RH
9mm NBR (std)	1790 W	2.0% HC
50mm rock wool	437 W	0.4% HC

Conditions	Summer	
Indoor	27ºC	50% RH
Outdoor	35ºC	40% RH
9mm NBR (std)	615 W	1.00% TCC
50mm rock wool	151 W	0.24% TCC

- Anti-freeze protection for low outdoor temperatures (GREAT COLD):
  - Electrical heater for protection of the components of the electrical cabinet. This is compulsory if the outdoor temperature is lower than -8ºC WB. With an outdoor temperature lower than -16ºC WB will be compulsory a reinforced resistance.
  - Compressor with protection for low temperature (supplementary crankcase heater). This is compulsory if the outdoor temperature is lower than -8ºC WB.
  - Dampers of the mixing box with spring for automatic closing in case of a tension cut. This is compulsory if the outdoor temperature is lower than -8ºC WB.
  - Electrical heater for antifreeze protection of dampers of the mixing box. This is compulsory if the outdoor temperature is lower than -12ºC WB.
  - Hot water coil circuit with anti-freeze technology based on the water temperature: mandatory for an outdoor temperature lower than -20ºC WB. This protection is made up of a circulation pump and two sensors inserted in the input and the output of the coil.

    Consult for percentages of glycol water above 20%.

Corrosion

- Coils (outdoor, indoor and/or auxiliary) with copper pipes and copper fins.
- INERA® coils (outdoor, indoor and/or auxiliary) with copper pipes and fins of an aluminium alloy of high performance and great resistance to the corrosion.
- Coils (outdoor, indoor and/or auxiliary) with copper pipes and aluminium fins with polyurethane and blygold coating.
- Condensate drain pan for the indoor circuit in stainless steel.

Humidity

- Stop-drop in the indoor air coil (optional from model 415 to 960 and included in models 1100 and 1200). Recommended in cases where a high moisture content in the air is foreseen or when the air flow is high.
- Stop-drop at the fresh air intake. This stop-drop and the thermoenthalpic free-cooling are necessary in cases where a high moisture content in the air is foreseen.
- Tropicalised components on the electrical cabinet with protective varnish: control board, cards and terminals.
- Tropicalised motors and fans (please consult).

Comfort / heating options

- Auxiliary hot water coil, with three-way valve. This option always incorporates an anti-freeze thermostat as safety system.
- Auxiliary electrical heaters, with two power stages and on/off control, for assembly and connection inside the unit.

  Note: the differential pressure switch for checking the air flow is included with centrifugal fan (optional).
- Natural or propane gas burner with modulating actuator, in accordance with the Gas Directive 2009/142/EC, installed inside a module attached to the supply of the unit, in assemblies wtih lateral supply. Available for all the models, except 415 and 480.

  Important: with centrifugal fan (optional), it's compulsory the differential pressure switch for checking the air flow.

  Note: with this option, it's recommended to install the differential pressure switch for detecting clogged filters.

  Note: a protection kit of low temperature is available for an outdoor temperature lower than -15ºC.

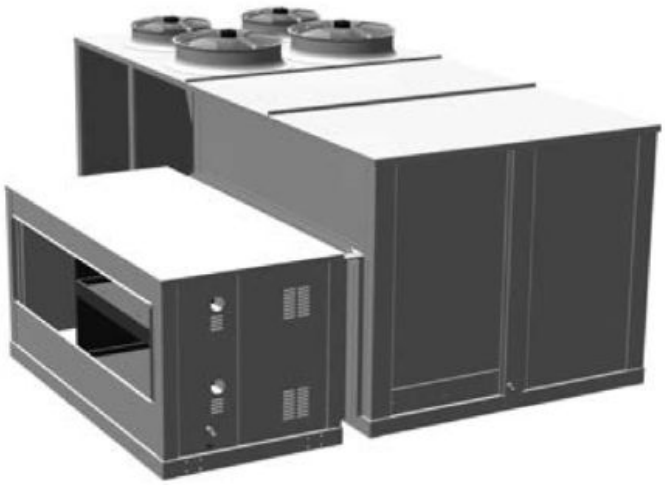

Comfort / indoor air quality options

- Different combinations of filters are available:
  - Gravimetric filters G4.
  - Gravimetric filters G4 of low pressure drop (l.p.d.).
  - Gravimetric filters G4 + opacimetric folded filters M6, F7, F8 or F9.
  - Gravimetric filters G4 + opacimetric folded filters F7 or F9 of low pressure drop.
  - Dual-stage of opacimetric folded filters (F+F standard or F+F of low pressure drop). With this option, a technical consultation must be made due to changes in unit dimensions (with MS assembly and top or bottom return).

Classification of the filters according to the new **ISO 16890 Standard:**

- G4 → ISO Coarse 60%
- G4 b.p.c. → ISO Coarse 65%
- M6 → ISO ePM10 60%
- F7 → ISO ePM1 50%
- F7 b.p.c. → ISO ePM1 60%
- F8 → ISO ePM1 65%
- F9 → ISO ePM1 80%
- F9 b.p.c. → ISO ePM1 90%

- Air quality sensor for installation in the environment or duct-mounted (attached picture) to enable measuring CO_2.

Energy saving / recovery options

Free-cooling management

- Running the unit in free-cooling mode allows it to make best use of outdoor air conditions when these are more favourable than the return air conditions. This allows the cooling capacity to be reduced. The percentage of outdoor air can vary between 0% and 100%.

  There are three options for free-cooling management:

  - Thermal, by comparing the temperatures.
  - Enthalpic, by comparing the enthalpies. Recommended in cases where a high moisture content in the air is foreseen.
  - Thermoenthalpic, by comparing the enthalpies and correcting for temperature. This is the optimum solution as it takes the variability of the climate into account.

Active recovery

- Thermodynamic circuit dedicated to recovery of the extracted air energy, with independent control, adapted to the air refreshing requirements in order to raise COP, EER and seasonal efficiency of the unit set.

  The circuit is composed of:

  - EC plug-fan or centrifugal fan (MRC0 or MRC1 assemblies).
  - Air circuit comprised of coils with copper pipes and aluminium fins.
  - Thermostatic expansion valve with external equalisation
  - Hermetic scroll-type compressor with sound insulation, assembled over antivibration mounts.
  - Crankcase heater.
  - Four-way cycle reversing valve (heat pump units).
  - Anti-acid dehydrator filter.
  - Condensates drain pan.

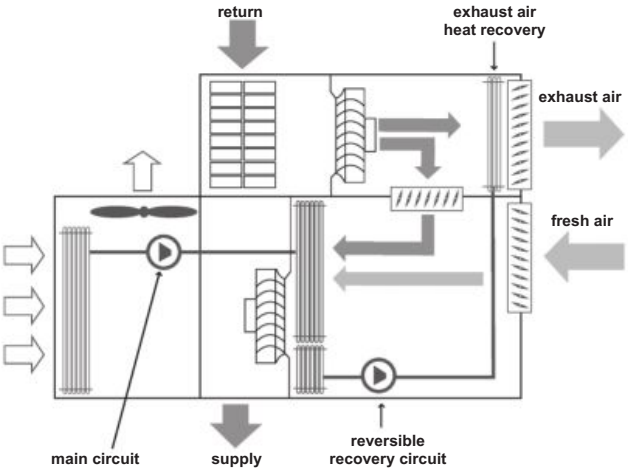

Passive recovery

- The rotary heat exchanger is fitted into a module attached to the side of the unit on site (MWC1 assembly). Available for models 415 to 960.

  This rotary recovery unit is used to transfer the sensible and latent heat from the air-conditioned room's return air to the fresh air used for ventilation, before it's discharged outdoors. This option reduces the compressors runtime, ensuring energy saving and benefiting the environment.

  The efficiency of energy recovery depend on the wheel selected: material, wheel diameters, channel cross section and type of speed control.

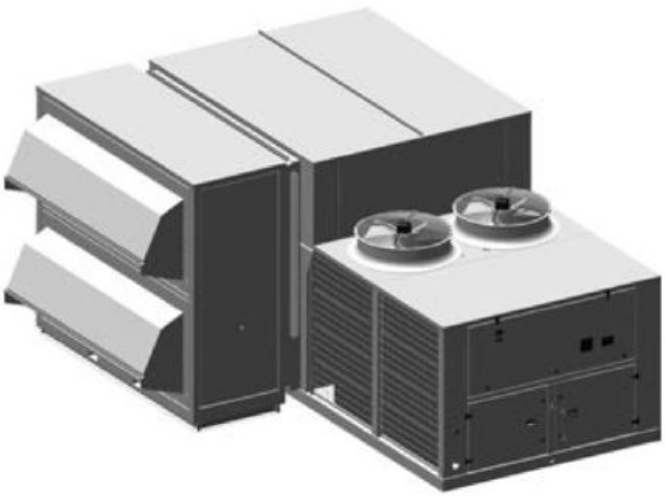

Installation options

- Axial 2-speed outdoor fan(s) directly coupled to the motor. Watertight motor class F, IP54 and internal thermal protection. Dynamically balanced propellers and outdoor protective grille.

  Important: models 840 1200 with these fans do not comply with ErP regulation (only for countries outside the European Union).
- Supply air and/or return air EC plug-fans, with high or low available pressure.

  Important: our "Selection Software" will choose the supply fan with lower consumption for the available pressure required.
- Centrifugal supply air and/or return air fans, coupled by pulleys and belts. Electric motor(s) with tensioner, class F, IP55 and internal thermal protection. Turbines with an impeller of front-curved blades. Greased spherical bearings, with no maintenance required. Optionally, high available pressure.

  Important: centrifugal supply fans do not comply with ErP regulation (only for countries outside the European Union).
- Control of the overpressure with the MC0, MRC0, MC1 and MRC1 assemblies.
- Condensates drain pan for the outdoor circuit in galvanised steel (consult the change of dimensions). This option is not available when transport by sea in a shipping container is required.

- Standardised pre-assembly roofcurbs made of galvanised steel panelling with polyester paint, thermally insulated. Adjustable height.

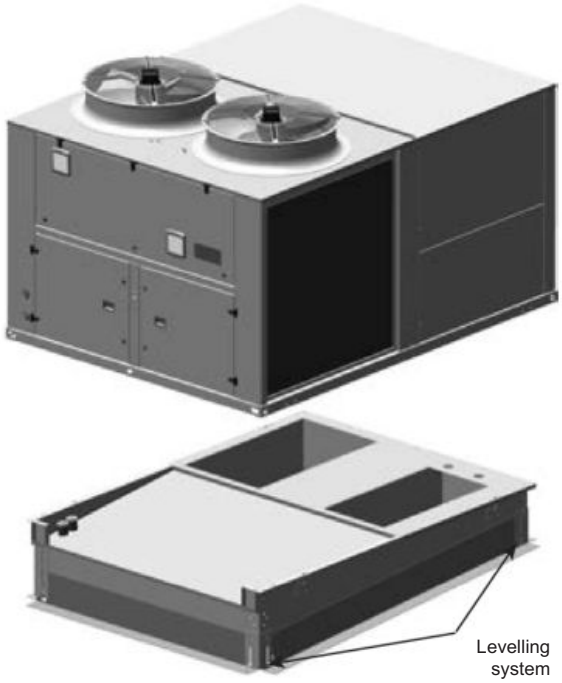

- Antivibration mounts made of rubber.
- Adaptation roofcurbs for the replacement of existing units on site.

- Protective grille for the outdoor coil.
- Hail guard protective grille for the outdoor coil.

Safety options

- Soft starter of the optional centrifugal supply air and/or return air fans, increasing the warm-up time, mainly intented to installations with fabric ducts. Compulsory with motors of 15 kW and above.
- Differential pressure switch to detect clogged filters.
- Differential pressure switch for checking the air flow, with centrifugal fan (optional).
- Smoke detecting station in accordance with the NF S 61-961 standard.
- Refrigerant leak detector. This allows prompt identification of gas leaks, guaranteeing the safety of any people in the vicinity. Installation of the device ensures compliance with European standards F-GAS and EN378 as well as ASHRAE 15.

Packing options

- Maritime packing SEI4C (with or without gas burner).
- Skis for transporting in closed container (except with assemblies MC1, MWC1 and MRC1).

Electrical cabinet options

- Electrical power supply with neutral.
- Numeration of components in the electrical panel.
- Numeration of wired.
- High performance phase monitoring relay, which allows to adjust the protection settings (highly recommended for installations with power system voltage instability, lag between current and voltage, high level of electromagnetic disturbances EMC, etc
- Energy meter for monitoring of the power consumption of the installation.
- Energy meter and cooling and heating capacities measurement. The unit incorporates, in addition to the energy meter, mixing and supply enthalpic sensors with RS485 communication that enable the calculation of cooling and heating capacities.

Control / communication options

- TCO user terminal, for installation on the electrical cabinet, instead of pGD1 terminal.
- Control without pGD1 terminal (for units with shared terminal).
- Kit remote control to 200 meters with pGD1 terminal (pGD1 terminal + 2 TCONN bypass cards). In this case it´s possible to install the TCO terminal on the electrical cabinet.

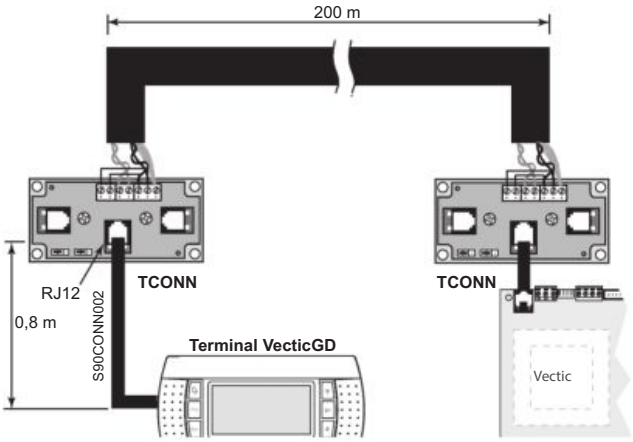

- Ambient temperature sensor with RS485 communication. By default the control incorporates a NTC sensor.

  Note: An ambient sensor with RS485 communication is required for installation at more than 30 m.
- Two to four ambient temperature sensor with RS485 communication.
- Ambient T+RH sensor with RS485 (compulsory in units with enthalpic or thermoenthalpic free-cooling as optional). In this case also added outdoor air humidity sensor.
- Air quality sensor for installation in the environment or in duct to enable measuring CO_2.
- Change to **AVANT+** electronic control with TCO terminal as standard and pGD1 terminal as optional (available for models 415 to 720): this control does not manage cooling recovery circuit, passive recovery or gas burner.

Communication

CIATrtc and **AVANT+** controls allow the connection to a centralised technical management system by using a specific BMS card for some of the following communication protocols:

- RS485 serial cards for network communication with protocols: Carel, Modbus, LonWorks®, BACnetTM MSTP, Konnex.
- Ethernet pCO Web card for network communication with protocols: Modbus TCP/IP, BACnetTM Ethernet, TCP/IP, SNMP V1-2-3, FTP and HTTP.

Supervision solutions

Different solutions of supervision are available bases on the dimensions of the installation for unit fitted with Ethernet pCO Web and RS485 Carel / Modbus cards.

- **pCO Web**

  It is the solution for the management and supervision of a single unit if this incorporates the Ethernet pCO Web card.
- **PlantWatchPRO3**

  This is a solution designed for the monitoring of small and medium-size installations, capable of manage up to 30 units. Suitable for technical environments, no parts are in movement. It's available in two versions: panel and wall.

  Includes: 7 " touch display, buzzer for notifications, 1 USB port and 1 SD card slot for downloading reports, charge devices models and applying service packs.

  For this option, each unit needs one RS485 Carel / Modbus board.
- **BOSS**

  This is the solution for the management and supervision of air-conditioning installations with up to 300 units. Integrated Hotspot Wi-Fi.

  It offers advanced monitoring and maintenance functions and allows zones and groups to be created to simplify the management of the installation. It also allows energy meters to be integrated to monitor the installation electricity consumption.

  BOSS is available in two versions:

  • CPU device.

  • CPU device, monitor, keyboard and screen.

  For this option, each unit needs one RS485 Carel / Modbus board.

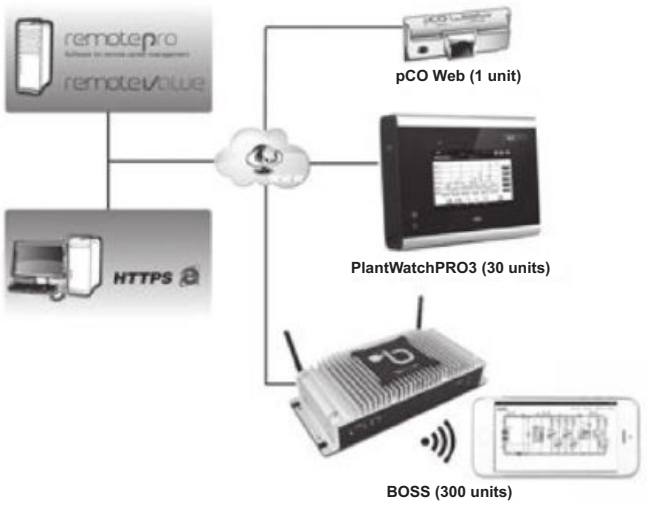

These systems are used to manage the installation remotely. All the information on the system can be accessed via a simple Internet connection. The online interface, the same one used by the local user, enables monitoring and complete configuration of the installation: from the office or anywhere else the user happens to be.

To control multiple sites remotely, there are special tools dedicated to centralized management, such as **RemotePRO** and **RemoteValue.**

TECHNICAL CHARACTERISTICS (EN-14511-2018)

Space PF		415	420	480	485	540	600	650	720	840	960	1100	1200
Cooling capacities	Cooling capacity ❶ (kW)	92,84	104,55	108,90	113,04	126,81	138,30	153,34	169,93	199,15	221,32	262,02	287,04
	Power input ❸ (kW)	32,92	32,27	37,42	36,12	41,44	47,04	48,07	56,46	67,05	76,85	88,52	98,98
	EER performance	2,82	3,24	2,91	3,13	3,06	2,94	3,19	3,01	2,97	2,88	2,96	2,90
	SEER	3,78	3,61	3,58	3,73	3,64	3,58	3,51	3,29	3,29	3,15	3,09	3,14
	ηs	148%	142%	140%	146%	143%	140%	138%	129%	129%	123%	121%	123%
Heating capacities	Heating capacity ❷ (kW)	99,26	106,35	108,20	115,56	129,79	141,20	159,56	178,07	208,50	230,58	266,58	290,66
	Power input ❸ (kW)	28,36	31,39	32,20	35,40	38,53	41,54	45,20	51,86	63,18	69,86	84,85	92,63
	COP performance	3,50	3,39	3,36	3,26	3,37	3,40	3,53	3,43	3,30	3,30	3,14	3,14
	SCOP	3,20	3,11	3,18	3,20	3,17	3,11	3,18	3,16	2,96	2,95	2,96	2,95
	ηs	125%	121%	124%	125%	124%	122%	124%	123%	116%	115%	115%	115%
Outdoor circuit fan	Nominal air flow (m^3/h)	30.000	42.000	30.000	42.000	42.000	42.000	55.000	56.000	75.000	75.000	112.500	112.500
	Available static pressure (mm.w.c)	4											
	Type	Electronic axial fan											
	Number x Diameter (mm)	2 x 800						2 x (630 + 800)		4 x 800		6 x 800	
	Motor output (kW)	2 x 2,2						2 x (0,9 + 2,2)		4 x 2,2		6 x 2,2	
	Power input in COOLING (kW)	2,18	4,11	2,18	4,11	4,11	4,11	3,56	4,30	7,56	7,56	11,68	11,68
	Power input in HEATING (kW)	3,00	5,44	3,00	5,44	5,44	5,44	5,34	5,49	9,48	9,48	14,67	14,67
	Speed (r.p.m.)	980						1000 / 980		980		980	
Indoor circuit supply fan	Nominal air flow (m^3/h)	18.000	18.000	18.200	18.200	20.400	24.000	27.500	30.000	33.000	37.000	42.000	46.000
	Available static pressure (mm.w.c)	25	25	25	25	30	30	35	35	35	35	35	35
	Type	Electronic plug-fan											
	Number x Diameter (mm)	3 x 500					4 x 500			5 x 500		5 x 500	
	Motor output (kW)	3 x 2,68					4 x 2,68			5 x 2,68		5 x 5,5	
	Power input (kW)	3,12	3,21	3,18	3,34	4,12	5,05	6,37	7,10	8,33	9,58	13,20	15,20
	Speed (r.p.m.)	3 x 1.700					4 x 1.700			5 x 1.700		5 x 2.200	
Compressor	Type	Scroll											
	No. compressors / stages / circuits	4 / 4 / 2								4 / 4 / 4			
	Oil type	Copeland 3MAF 32cST, Danfoss POE 160SZ, ICI Emkarate RL 32CF, Mobil EAL Artic 22CC											
	Volume of oil (l)	4 x 3,3	4 x 3,3	4 x 3,3	4 x 3,3	4 x 3,3	4 x 3,3	4 x 3,3	4 x 6,2	4 x 6,2	4 x 6,2	4 x 6,2	4 x 6,2
Electrical characteristics	Mains voltage	400 V / III ph / 50 Hz (±10%)											
	Power supply	3 Wires + Ground											
Maximum absorbed current	Compressor(s) (A)	74,0	74,0	80,4	80,4	92,0	96,2	100,4	122,0	140,6	159,2	182,2	205,2
	Outdoor fan(s) (A)	6,8	6,8	6,8	6,8	6,8	6,8	10,8	10,8	13,6	13,6	20,4	20,4
	Indoor fan (A)	12,5	12,5	12,5	12,5	12,5	16,7	16,7	16,7	20,9	20,9	42,0	42,0
	Control (A)	1,8	1,8	1,8	1,8	1,8	1,8	1,8	1,8	1,8	1,8	1,8	1,8
	Total (A)	95,1	95,1	101,5	101,5	113,1	121,5	129,7	151,3	176,9	195,5	246,4	269,4
Refrigerant	Type	R-410A											
	Global warming potential (GWP) ❹	2.088											
	Charge (kg)	34,0	34,0	29,0	34,0	42,0	43,0	53,0	52,0	58,0	58,0	57,2	62,0
	Environment impact (tCO_2eq)	71,0	71,0	60,6	71,0	87,7	89,8	110,7	108,6	121,1	121,1	119,4	129,5
Dimensions	Length (mm)	3.326	4.816	3.326	4.816			4.816				6.316	
	Width (mm)	2.205	2.205	2.205	2.205			2.205				2.205	
	Height (mm)	2.095	1.795	2.095	1.795			2.095				2.095	
Weight	(kg)	1.703	1.926	1.726	1.951	1.950	1.999	2.213	2.264	2.390	2.487	2.998	3.111
Condensate outlet Ø		1 1/4" adaptor											

❶ Cooling capacity calculated in accordance with the EN-14511-2018 standard given for indoor temperature conditions 27ºC, 19ºC WB and 35ºC outdoor temperature.
❷ Heating capacity calculated in accordance with the EN-14511-2018 standard given for indoor temperature conditions 20ºC and 6ºC WB outdoor temperature.
❸ Total power input by compressors and motorised fans under nominal conditions, calculated in accordance with the EN-14511-2018 standard.
❹ Climatic warming potential of a kilogram of fluorinated greenhouse gas in relation to a kilogram of carbon dioxide over a period of 100 years.

EUROVENT CERTIFIED PERFORMANCE
www.eurovent-certification.com

Eurovent certified values

Overall dimensions of the different assemblies

Space PF	M0, MS, MA, ME, MC0, MRC0 assemblies			MC1, MRC1 assemblies			MWC1 assembly		
	Length (mm)	Width (mm)	Height (mm)	Length (mm)	Width (mm)	Height (mm)	Length (mm)	Width (mm)	Height (mm)
415 / 480	3326	2205	2095	3326	2205	2605	3326	3368	2605
420 / 485 / 540 / 600	4816	2205	1795	4816	2205	2305	4816	3368	2305
650 / 720 / 840 / 960	4816	2205	2095	4816	2205	2605	4816	3368	2605
1100 / 1200	6316	2205	2095	6316	2205	2605	--	--	--

Electrical connections

Nb.	Space PF		415 à 1200
1	Main power supply	400 III (±10%)	3 wires + ground
2	Remote connection of pGD1 terminal (by default installed on the electrical cabinet) ❶		telephone cable 6 wires standard (RJ12 connector)
3	Connection of TCO user terminal on the electrical cabinet (optional) ❷		2 wires for power supply 230V + 1 shielded cable for communication type AGW20 / 22 (1 braided pair + drainwire + shielding)
4	Remote off/on (optional)		2 wires
5	General fault signal (optional)		2 wires
6	Circulation pump signal for HWC (antifreeze sec.) (opt.)		1 wire
7	Ambient probe	NTC (std)	2 wires
		RS485 (opt.)	5 wires ❸
8	Air quality sensor (opt.)		3 wires

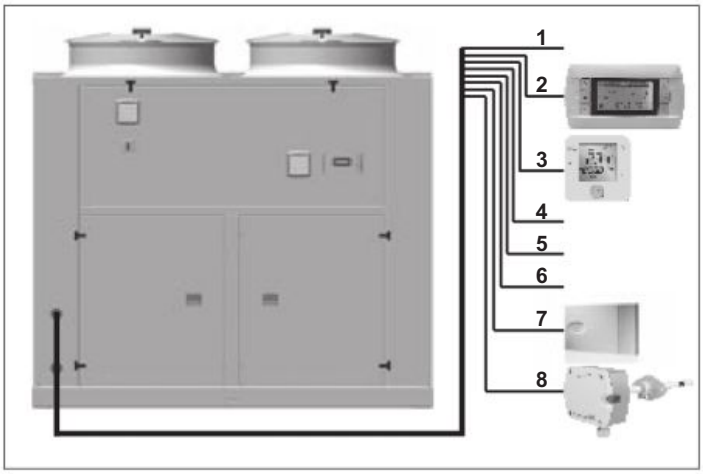

❶ In this case, it´s posible to install the TCO terminal on the electrical cabinet.
❷ It's necessary that the terminal uses the same power supply that the control board.
❸ Up to four RS485 ambient sensors can be connected in series on the field-bus of the control board.

Options for the outdoor unit

Outdoor condensates pan

Space PF			415	480	420	485	540	600	650	720	840	960	1100	1200
Overall dimensions	Length	(mm)	3.326		4.816								6.316	
	Width ❶	(mm)	2.329		2.329									
	Height	(mm)	2.095		1.795				2.095					

❶ The unit includes two condensates pans, one on each side.

Axial 2-speed outdoor fan

Space PF		415	420	480	485	540	600	650	720	840 ❶	960 ❶	1100 ❶	1200 ❶
Nominal air flow	(m^3/h)	30.000	42.000	30.000	42.000	42.000	42.000	55.000	56.000	75.000	75.000	112.500	112.500
Available static pressure	(mmCE)	4											
Number / Diameter	(mm)	2 x 800						2 x 630 + 2 x 800		4 x 800		6 x 800	
Output	(kW)	2 x 2,0 / 1,3						2 x 0,7 / 0,4 + 2 x 2,0 / 1,3		4 x 2,0 / 1,3		6 x 2,0 / 1,3	
Maximum speed	(tr/min)	895 / 685						875 / 650 895 / 685		895 / 685		895 / 685	
Maximum absorbed current	(A)	8,6						11,2		17,2		25,8	

❶ These models do not comply with ErP regulation (only for countries outside the European Union).

OPTIONS FOR THE INDOOR UNIT

Supply EC plug-fan with high or low available pressure

Space PF			415	420	480	485	540	600	650	720	840	960	1100	1200
Nominal air flow		(m^3/h)	18.000	18.000	18.200	18.200	20.400	24.000	27.500	30.000	33.000	37.000	42.000	46.000
Nominal available static pressure		(mmCE)	25	25	25	25	30	30	35	35	35	35	35	35
High pressure (HP)	Number x Diameter	(mm)	--				3 x 500		3 x 560		4 x 560		5 x 560	
	Output	(kW)	--				3 x 5,5		3 x 4,7		4 x 4,7		5 x 4,7	
	Speed	(tr/min)	--				3 x 2.200		3 x 1.750		4 x 1.750		5 x 1.750	
	Max. absorbed current	(A)	--				25,2		21,9		29,2		36,5	
Low pressure (LP)	Number x Diameter	(mm)	2				2	3			4		6	
	Output	(kW)	2 x 2,83				2 x 2,68	3 x 2,83			4 x 2,83		6 x 2,83	
	Speed	(tr/min)	2 x 1.780				2 x 1.700	3 x 1.780			4 x 1.780		6 x 1.780	
	Max. absorbed current	(A)	8,6				8,3	12,9			17,2		25,8	
Extra low pressure (XLP)	Number x Diameter	(mm)	2				--	3			4		5	
	Output	(kW)	2 x 2,68				--	3 x 2,68			4 x 2,68		5 x 2,83	
	Speed	(tr/min)	2 x 1.700				--	3 x 1.700			4 x 1.700		5 x 1.780	
	Max. absorbed current	(A)	9,3				--	12,5			16,7		21,5	
Extra extra low pressure (XXLP)	Number x Diameter	(mm)	--										5 x 500	
	Output	(kW)	--										5 x 2,7	
	Speed	(tr/min)	--										5 x 1.700	
	Max. absorbed current	(A)	--										20,9	

Note: the value of power input according to the selected flow can be found at our "Selection Software".

Centrifugal supply fan

Space PF		415	420	480	485	540	600	650	720	840	960	1100	1200
Nominal air flow	(m^3/h)	18.000	18.000	18.200	18.200	20.400	24.000	27.500	30.000	33.000	37.000	42.000	46.000
Available static pressure	(mmCE)	12,5	12,5	15,0	15,0	15,0	15,0	17,5	17,5	17,5	17,5	17,5	17,5
Number / No. turbines		2 / 2								3 / 3		1 / 3	
Output	(kW)	2 x 2,2	2 x 1,5	2 x 2,2	2 x 1,5	2 x 2,2	2 x 3	2 x 4	2 x 4	3 x 3	3 x 3	18,5	22
Nominal absorbed output	(kW)	2,72	2,04	2,94	2,18	2,88	4,06	5,15	6,21	5,87	7,49	13,47	16,62
Speed	(tr/min)	688	535	717	554	597	639	654	677	677	714	873	916
Maximum absorbed current	(A)	10,0	7,1	10,0	7,1	10,0	13,8	18,0	18,0	20,7	20,7	37,0	42,0

Note : These fans do not comply with ErP regulation (only for countries outside the European Union).

Return EC plug-fan (MC0 / MRC0 / MC1 MRC1 / MWC1 assemblies)

Space PF			415	420	480	485	540	600	650	720	840	960	1100	1200
Nominal air flow		(m^3/h)	18.000	18.000	18.200	18.200	20.400	24.000	27.500	30.000	33.000	37.000	42.000	46.000
Nominal available static pressure		(mmCE)	12,5	12,5	15,0	15,0	15,0	15,0	17,5	17,5	17,5	17,5	17,5	17,5
High pressure (HP)	Number x Diameter	(mm)	2 x 500	3 x 500			--	3 x 500		4 x 500			--	
	Output	(kW)	2 x 5,5	3 x 2,68			--	3 x 5,5		4 x 5,5			--	
	Speed	(tr/min)	2 x 2.200	3 x 1.700			--	3 x 2.200		4 x 2.200			--	
	Max. absorbed current	(A)	16,8	12,6	12,6	12,6	--	25,2		33,6			--	
No pressure (LP)	Number x Diameter	(mm)	2 x 500				3 x 500			4 x 500			4 x 500	
	Output	(kW)	2 x 2,68				3 x 2,68			4 x 2,68			4 x 5,5	
	Speed	(tr/min)	2 x 1.700				3 x 1.700			4 x 1.700			4 x 2.200	
	Max. absorbed current	(A)	8,3				12,5			16,7			33,6	
Low pressure (LP)	Number x Diameter	(mm)	--				2 x 500		--	3 x 500		--	4 x 500	
	Output	(kW)	--				2 x 2,68		--	3 x 2,68		--	4 x 2,68	
	Speed	(tr/min)	--				2 x 1.700		--	3 x 1.700		--	4 x 1.700	
	Max. absorbed current	(A)	--				8,3		--	12,5		--	16,7	

Note : the value of power input according to the selected flow can be found at our "Selection Software"..

Centrifugal return fan (MC1 assembly)

Space PF		415	420	480	485	540	600	650	720	840	960	1100	1200
Nominal air flow	(m^3/h)	18.000	18.000	18.200	18.200	20.400	24.000	27.500	30.000	33.000	37.000	42.000	46.000
Available static pressure	(mmCE)	12,5	12,5	15,0	15,0	15,0	15,0	17,5	17,5	17,5	17,5	17,5	17,5
Nominal power input	(kW)	2,50	1,76	2,56	1,80	2,28	3,22	4,32	5,25	4,10	5,14	10,05	13,05
Number / No. turbines		2 / 2								3 / 3		1 / 3	
Puissance	(kW)	2 x 1,5	2 x 1,1	2 x 2,2	2 x 1,1	2 x 1,5	2 x 2,2	2 x 3	2 x 4	3 x 2,2	3 x 2,2	15	18,5
Output	(tr/min)	634	488	673	489	509	546	577	600	536	554	709	770
Maximum absorbed current	(A)	7,2	5,4	10,0	5,4	7,2	10,0	13,8	18,0	15,0	15,0	29,0	37,0
Weight supplement	(kg)	-17	-16	-17	-16	-34	-27	-15	-44	2	2	96	96

MRC cooling recovery circuit

Space PF			415	420	480	485	540	600	650	720	840	960	1100	1200
Nominal flow		(m^3/h)	18.000	18.000	18.200	18.200	20.400	24.000	27.500	30.000	33.000	37.000	42.000	46.000
EC plug-fan (MRC0 / MRC1)	Available static pressure in return	(mm.w.c)	45,3	49,1	43,1	47,0	77,8	63,6	40,7	68,2	56,8	38,3	94,1	77,8
Centrifugal fan (MRC1)	Maximum available static pressure in return	(mm.w.c)	12,5	12,5	15,0	15,0	15,0	15,0	17,5	17,5	17,5	17,5	17,5	17,5
	Extra weight	(kg)	-17	-16	-17	-16	-34	-27	-15	-44	2	2	96	96
Recovery scroll compressor characteristics	No. of compressors / circuits		1 / 1											
	Oil type		Copeland 3MAF 32cST, Danfoss POE 160SZ, ICI Emkarate RL 32CF, Mobil EAL Artic 22CC											
	Volume of oil	(l)	3,0				3,3		4		6,2		6,2	
	Max. absorbed current	(A)	15,3				20,1		25,1		30,5		39,8	
Refrigerant charge R-410A		(kg)	8,0	8,5	8,2	9,0	10,0	10,0	10,0	10,0	9,5	9,5	10,5	10,5

Important : With this option, CIATrtc electronic control is mandatory, the change of control isn't allowed.

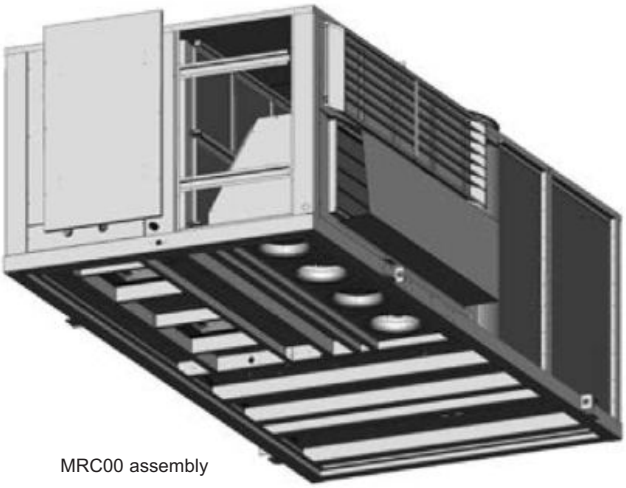

MRC00 assembly

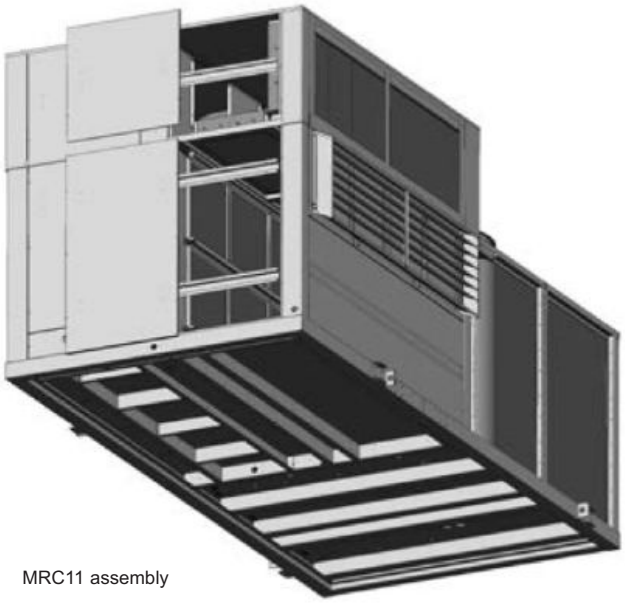

MRC11 assembly

Axial extraction fan (ME assembly)

Space PF		415	420	480	485	540	600	650	720	840	960	1100	1200
Nominal air flow	(m^3/h)	18.000	18.000	18.200	18.200	20.400	24.000	27.500	30.000	30.000	30.000	37.500	37.500
Number / Diameter	(mm)	3 x 500	4 x 500	3 x 500	4 x 500							5 x 500	
Power supply voltage		230 V / I ph / 50 Hz											
Output	(kW)	3 x 0,64	4 x 0,64	3 x 0,64	4 x 0,64							5 x 0,64	
Speed	(tr/min)	1.270											
Maximum absorbed current	(A)	9,0	12,0	9,0	12,0							15,0	

Axial return fan (MA assembly)

Space PF		415	420	480	485	540	600	650	720	840	960	1100	1200
Maximum air flow	(m³/h)	9.000	9.000	9.100	9.100	10.200	12.000	13.750	15.000	16.500	18.500	21.000	23.000
Number x Diameter	(mm)	2 x 450						3 x 450				4 x 450	
Power supply voltage		230 V / I ph / 50 Hz											
Output	(kW)	2 x 0,48						3 x 0,48				4 x 0,48	
Speed	(tr/min)	1.350											
Maximum absorbed current	(A)	4,2						6,3				8,4	

MWC1 rotary heat exchanger

MWC1 assembly, available for models 415 to 960.

This rotary recovery unit is used to transfer the sensible and latent heat from the air-conditioned room's return air to the fresh air used for ventilation, before it's discharged outdoors.

The return air circulates in half of the heat recovery unit and the ventilation air circulates in the other half, in the opposite direction. As the rotor rotates, very fine channels of air which form the matrix come into contact with the frsh air and the return air in turn, thereby transferring heat and humidity from one to the other.

The efficiency of the recovery depends on the following factors:

- Wheel diameters:

- 1500 mm: all models
- 1800 mm: all models except 415 and 480
- 2000 mm: all models except 415 and 480

- Matrix materials:

- Aluminum: sensible heat recovery.
- Epoxy coated aluminium: sensible heat recovery in aggressive environments.
- Hybrid wheel: enthalpic recovery.
- Silicagel coated aluminium: enthalpic recovery with high efficiency in the recovery of latent heat.

- Channel cross section :

The wheel is formed of two panels of aluminum, one smooth and one fluted.

The fluted panel can be provided in four different configurations:

- 1.5 mm cross section: very high efficiency for its great number of surface. It presents a greater pressure drop due to its smaller channels.
- 1.7 mm cross section: high efficiency.
- 2.0 mm cross section: the commonly-used cross section due to its high efficiency and moderate pressure drops.
- 2.5 mm cross section: low pressure drop. Designed for high frontal speeds with low pressure drops.

The rotary heat exchanger is fitted into a module attached to the side of the unit on site

This module is equipped with filters on the fresh air intake and on the exhaust air outlet: washable (default option), G4 or G4 with low pressure drop (optional).

With the MWC1 assembly, the supply air fans and the return air fans are electronic plug-fans. There are two fans depending on the available pressure. Consult the selection tables for these fans.

This assembly can be supplied, in option, with a speed drive for the wheel which avoids the risk of ice forming on the wheel during the defrost operation.

Important : the calculations for the selection of a rotary heat exchanger according to the parameters described above should be done using our selection software.

Important : With this option, CIATrtc electronic control is mandatory, the change of control isn't allowed.

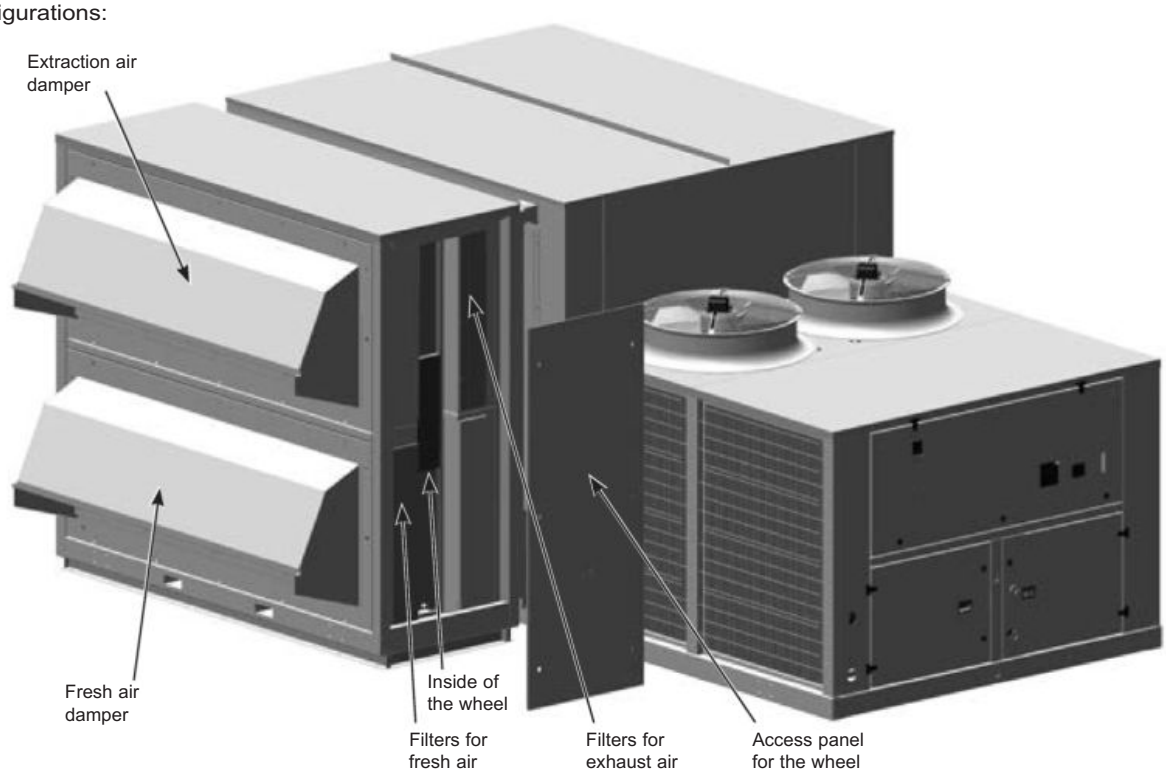

Hot water auxiliary coil

Space PF			415	420	480	485	540	600	650	720	840	960	1100	1200
Air pressure drop		(mm.w.c.)	2,7	2,1	2,7	2,1	2,5	3,3	2,9	3,4	4,0	4,8	4,5	5,3
Water 80/60ºC and inlet air 20ºC	Heating capacity	(kW)	146,3	181,2	147,3	182,5	196,0	216,3	255,0	268,7	284,3	303,8	326,7	352,4
	Water flow	(m^3/h)	6,5	8,0	6,5	8,1	8,7	9,2	11,3	11,9	12,6	13,5	14,4	15,6
	Water pressure drop	(m.w.c)	1,7	2,0	1,8	2,0	1,9	2,3	3,1	3,4	3,8	4,4	2,1	2,4
Water 90/70ºC and inlet air 20ºC	Heating capacity	(kW)	179,8	223,1	181,1	224,7	241,5	266,9	314,5	331,6	351,0	375,3	403,3	436,6
	Water flow	(m^3/h)	8,0	9,9	8,0	10,0	10,7	11,9	14,0	14,7	15,6	16,7	17,9	19,3
	Water pressure drop	(m.w.c)	2,6	2,4	2,6	2,5	2,8	3,5	3,9	4,3	4,8	5,5	3,2	3,7

Note: The hot water coil is not compatible with the stop-drop in the indoor air coil.

Note: This option always incorporates an antigel thermostat as safety system.

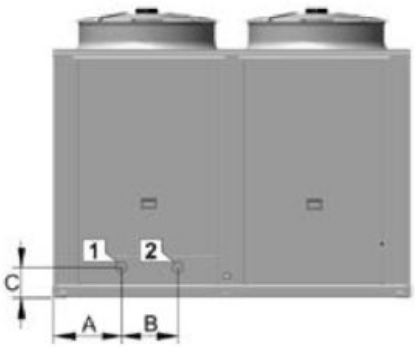

Position of the hydraulic connections of the hot water auxiliary coil (optional)

Space PF	A (mm)	B (mm)	C (mm)	Ø hydraulic connections: I/O
415 / 420 / 480 / 485 / 540 / 600	302	250	222	2”
650 / 720 / 840 / 960	302	250	222	2”
1100 / 1200	302	250	222	2 1/2”

LEGEND

1 Water outlet

2 Water inlet

Note: The I / O connections of the coil are located inside the unit.
The connection can be established via the unit base using flexible tubing or via the side panel. In the above diagram, the position of the sheet metal precuts is shown on the side panel.
To connections for the base to consult pre-assembly roofcurbs schemes.

Electrical heater

Auxiliary 2-stage electrical heaters for assembly and connection inside the unit.

Note: the differential pressure switch for checking the air flow is included with centrifugal fan (optional).

Space PF	Total output (kW)		27	36	45	54	72	90
	Stage power (kW)		9 + 18	18 + 18	18 + 27	27 + 27	36 + 36	45 + 45
415 / 480	Supply plug-fan (standard)	Current (A) (400V / IIIph / 50Hz)	39,0	52,0	65,0	unavailable		
420 / 485 / 540			39,0	unavailable				
600			unavailable	52,0	65,0	unavailable		
650 / 720			unavailable		65,0	78,0	unavailable	
840 / 960 / 1100 / 1200			unavailable		65,0	78,0	unavailable	
415 / 420 / 480 / 485	Supply centrifugal fan (optional)	Current (A) (400V / IIIph / 50Hz)	39,0	52,0	65,0	78,0	unavailable	
540			39,0	52,0	65,0	78,0	104,0	non disp.
600			non disp.	52,0	65,0	78,0	104,0	non disp.
650 / 720			unavailable		65,0	78,0	104,0	non disp.
840 / 960 / 1100 / 1200			unavailable		65,0	78,0	104,0	130,0

Note: With this option, the air flow controller is compulsory, if the unit does not incorporate supply plug-fan. Nevertheless, if the unit incorporates supply plug-fan, it is not possible to select the optional the air flow controller, since the proper fan realizes this function.

Stop-drop in the indoor air coil

Air flow at which it is recommended to install a stop-drop in the indoor coil (included in models 1100 and 1200).

Space PF		415	420	480	485	540	600	650	720	840	960	1100	1200
Air flow	(m^3/h)	27.700	30.090	27.700	30.090	30.090	30.090	37.030	37.030	37.030	37.030	incluido de serie	

Note: For operating conditions with high dehumidification in the indoor coil (e.g. in installations close to the coast) it may be necessary to install a separator even if the flow is less than the previous one.

Note: The stop-drop in the indoor air coil is not compatible with the hot water coil.

Gas burner

Natural or propane gas burner with modulating actuator, in accordance with the Gas Directive 2009/142/EC, installed inside a module attached to the supply the assemblies wtih lateral supply. Available for all the models, except 415 and 480.

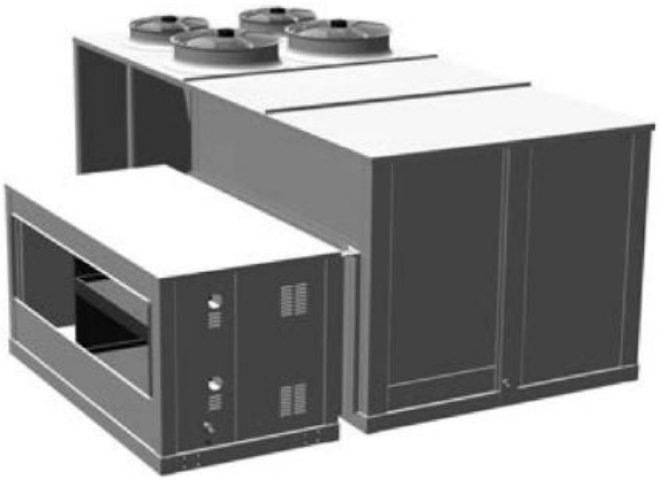

Important: With this option, CIATrtc electronic control is mandatory, the change of control isn't allowed.

■ The key features of the boiler are:

- Condensation boiler with premixing and modulation technology that allows outputs close to 109% (Hi performance).
- The premixed burner, in combination with the air/gas valve, ensures a "clean" combustion. Low NOx emissions (class 5, according to standard EN 297).
- The combustion chamber and the burner are entirely made of stainless steel.
- Electronic controller with microprocessor and multifunction LCD display, located inside the burner, for burner's control, configuration and diagnostics.
- The power control will be carried out by the burner's own control in accordance with the signal received from the CIATrtc control (0-10V).
- The electronic control shall manage the connection of the burner, in heating mode, via an ON/OFF signal.

Note: A protection kit of low temperature is available for an outdoor temperature lower than -15ºC.

Important: With centrifugal fan (optional), it's compulsory the differential pressure switch for checking the air flow.

Model			PCH065		PCH080		PCH105		PCH130 (2 x PCH65)		PCH160 (2 x PCH80)		PCH210 (2 x PCH105)	
Type of equipment			B23P - B53P - C13 - C43 - C53 - C63 - C83											
EC certification		PIN.	0694CP1457											
NOx Class		Val	5											
Heater Performance	Range		Min.	Max	Min.	Max	Min.	Max	Min.	Max	Min.	Max	Min.	Max
	Thermal output (Hi)	kW	12,40	65,00	16,40	82,00	21,00	100,00	12,40	130,00	16,40	164,00	21,00	200,00
	Useful thermal output	kW	13,40	62,93	17,77	80,03	22,77	97,15	13,40	125,86	17,77	160,06	22,77	194,30
	High efficiency perform. (L.C.V.)	%	108,06	96,82	108,35	97,60	108,40	97,15	108,06	96,82	108,35	97,60	108,40	97,15
	Hs Performance (H.C.V.)	%	97,36	87,22	97,62	87,93	97,68	87,52	97,36	87,22	97,62	87,93	97,68	87,52
	Flue losses with burner off (Hi)	%	0,2	3,2	0,3	2,4	0,2	2,8	0,2	3,2	0,3	2,4	0,2	2,8
	Flue losses with burner off (Hi)	%	<0,1											
	Losses in enclosure ❶		0%											
	Max. condensation ❷	l/h	2,1		3,3		2,7		4,2		6,6		5,4	
Exhaust gases - Polluting emissions	Carbon monoxide - C0 - (0% of O_2) ❸	ppm	< 5											
	Nitrogen oxides - NOx - (0% of O_2) ❹		40 mg/kWh - 22,68 ppm		34 mg/kWh - 19,27 ppm		45 mg/kWh - 25,51 ppm		40 mg/kWh - 22,68 ppm		34 mg/kWh - 19,27 ppm		45 mg/kWh - 25,51 ppm	
	Available pressure at flue	Pa	120											
Electrical data	Power supply		230 Vac - 50 Hz single-phase											
	Power input		15	97	40	123	20	130	30	194	80	246	40	260
	Power input in stand-by		<5											
	Ingress protection rating		IP X5D											
	Operating Temperatures (5)		from -15°C to +40°C											
Connections	Ø gas connection	GAZ	UNI/ISO 7/1- G 3/4"						UNI/ISO 7/1- G 1 1/2"					
	Ø intake/exhaust pipes	mm	80/80						2 x 80/80					

❶ Enclosure losses match those of the machine housing the PCH.
❷ Max. condensation produced acquired from testing 30%Qn
❸ Value referenced to cat. H (G20)
❹ Weighted value to EN1020 ref. to class H (G20), referred to Hi (L.C.V.).

The following table indicates the gas setting:

Type gaz	Gas settings		PCH065		PCH080		PCH105		PCH130 (2 x PCH65)		PCH160 (2 x PCH80)		PCH210 (2 x PCH105)	
			min.	max.	min.	max.	min.	max.	min.	max.	min.	max.	min.	max.
G20	Air supply pressure	mbar	20 [min 17-max 25]											
	Ø pilot nozzle	mm	0,7											
	Gas consumption (15°C-1013mbar)	m^3/h	1,31	6,88	1,74	8,68	1,90	10,58	2 x 1,31	2 x 6,88	2 x 1,74	2 x 8,68	2 x 1,90	2 x 10,58
	Carbon dioxide - CO_2 content	%	8,7	9,1	8,7	9,1	8,5	9,1	8,7	9,1	8,7	9,1	8,5	9,1
	Fumes temperature	ºC	31	86	26,5	70	28	80	31	86	26,5	70	28	80
	Fume mass flow rate (max.)	kg/h	107		135		165		2 x 107		2 x 135		2 x 165	
	Gas butterly valve	mm	11		12,2		15,8		11		12,2		15,8	
G25	Air supply pressure	mbar	25 [min 17-max 30] (20 for Germany)											
	Ø pilot nozzle	mm	0,7 (0,75 for Germany)											
	Gas consumption (15°C-1013mbar)	m^3/h	1,05	5,17	2,02	10,1	2,21	12,30	2 x 1,05	2 x 5,17	2 x 2,02	2 x 10,1	2 x 2,21	2 x 12,30
	Carbon dioxide - CO_2 content	%	8,8	9,2	8,6	9,1	8,8	9,0	8,8	9,2	8,6	9,1	8,8	9,0
	Fumes temperature	ºC	31	86	26,5	70	28	80	31	86	26,5	70	28	80
	Fume mass flow rate (max.)	kg/h	--											
	Gas butterly valve	mm	Not necessary											
G30	Air supply pressure	mbar	30 [min 25-max 35] - 50 [min 42,5-max 57,5]											
	Ø pilot nozzle	mm	0,51											
	Gas consumption (15°C-1013mbar)	m^3/h	1,03	5,39	1,49	6,80	1,70	8,30	2 x 1,03	2 x 5,39	2 x 1,49	2 x 6,80	2 x 1,70	2 x 8,30
	Carbon dioxide - CO_2 content	%	10,7	11,3	10,1	10,3	10,4	10,6	10,7	11,3	10,1	10,3	10,4	10,6
	Fumes temperature	ºC	31	86	26,5	70	28	80	31	86	26,5	70	28	80
	Fume mass flow rate (max.)	kg/h	--											
	Gas butterly valve	mm	6,5		7,0		9,3		6,5		7,0		9,3	
G31	Air supply pressure	mbar	30 [min 25-max 35] - 37 [min 25-max 45] - 50 [min 42,5-max 57,5]											
	Ø pilot nozzle	mm	0,51											
	Gas consumption (15°C-1013mbar)	m^3/h	1,01	5,31	1,34	6,70	1,47	8,18	2 x 1,01	2 x 5,31	2 x 1,34	2 x 6,70	2 x 1,47	2 x 8,18
	Carbon dioxide - CO_2 content	%	9,4	9,6	9,3	9,6	9,5	9,8	9,4	9,6	9,3	9,6	9,5	9,8
	Fumes temperature	ºC	31	86	36,5	70	28	80	31	86	36,5	70	28	80
	Fume mass flow rate (max.)	kg/h	84		107		130		2 x 84		2 x 107		2 x 130	
	Gas butterly valve	mm	6,5		7,0		9,3		6,5		7,0		9,3	

The following table indicates the type of gas used by the gas burner as a function of the destination country:

Country	Category	Gaz	Pressure (mbar)	Gaz	Pressure (mbar)
Austria, Switzerland	II2H3B/P	G20	20	G30/G31	50
Belgium < 70kW	I2E(S)B,I3P	G20/G25	20/25	G31	37
Belgium > 70kW	I2E(R)B,I3P	G20/G25	20/25	G31	37
Germany	II2ELL3B/P	G20	20	G30/G31	50
Denmark, Finland, Greece, Sweden, Norway, Italy, Czech Republic, Estonia, Lithuania, Slovenia, Albania, Macedonia, Bulgaria, Romania, Croatia, Turkey, Azerbaijan	II2H3B/P	G20	20	G30/G31	30
Spain, United Kingdom, Ireland, Portugal, Slovakia	II2H3P	G20	20	G31	37
France	II2Esi3P	G20/G25	20/25	G31	37
Luxembourg	II2E3P	G20/G25	20	G31	37/50
Netherlands	II2L3B/P	G25	25	G30/G31	50
Hungary	II2HS3B/P	G20/G25.1	25	G30/G31	30
Cyprus, Malta	I3B/P	--	--	G30/G31	30
Latvia	I2H	G20	20		
Iceland	I3P	--	--	G31	37
Poland	II2E3B/P	G20/G2.350 (*)	20/13	G30/G31	37
Russia	II2H3B/P	G20	20	G30/G31	30

Recommended service clearance

Space PF -
415, 420, 480, 485, 540, 600, 650, 720, 840 et 960

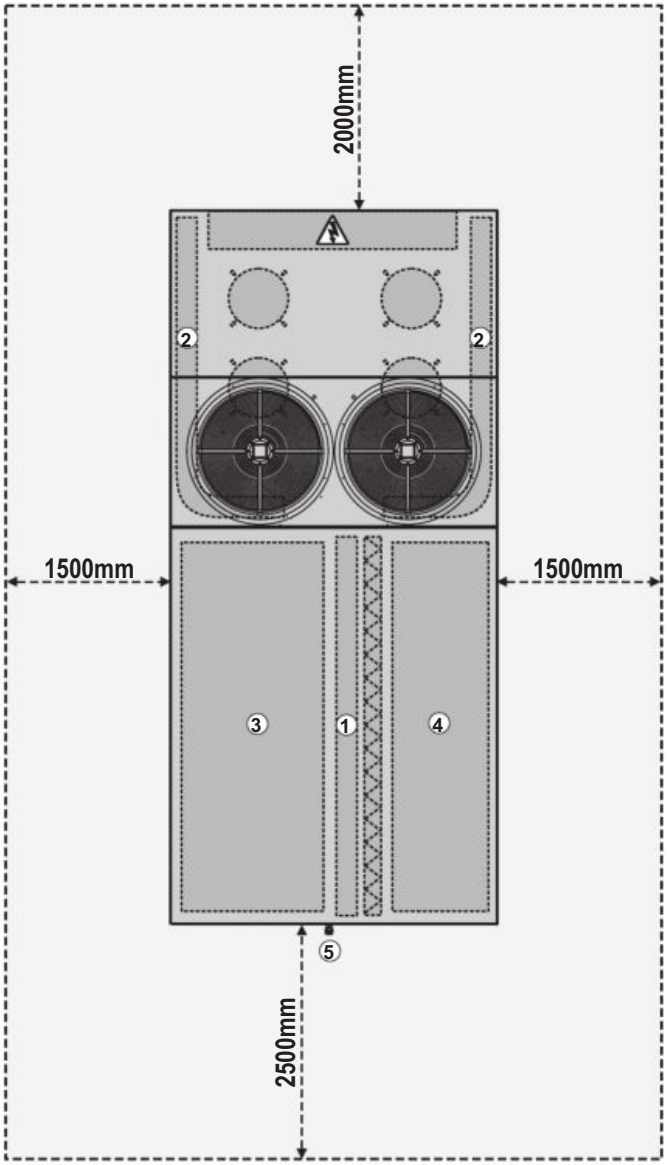

Space PF -
1100 et 1200

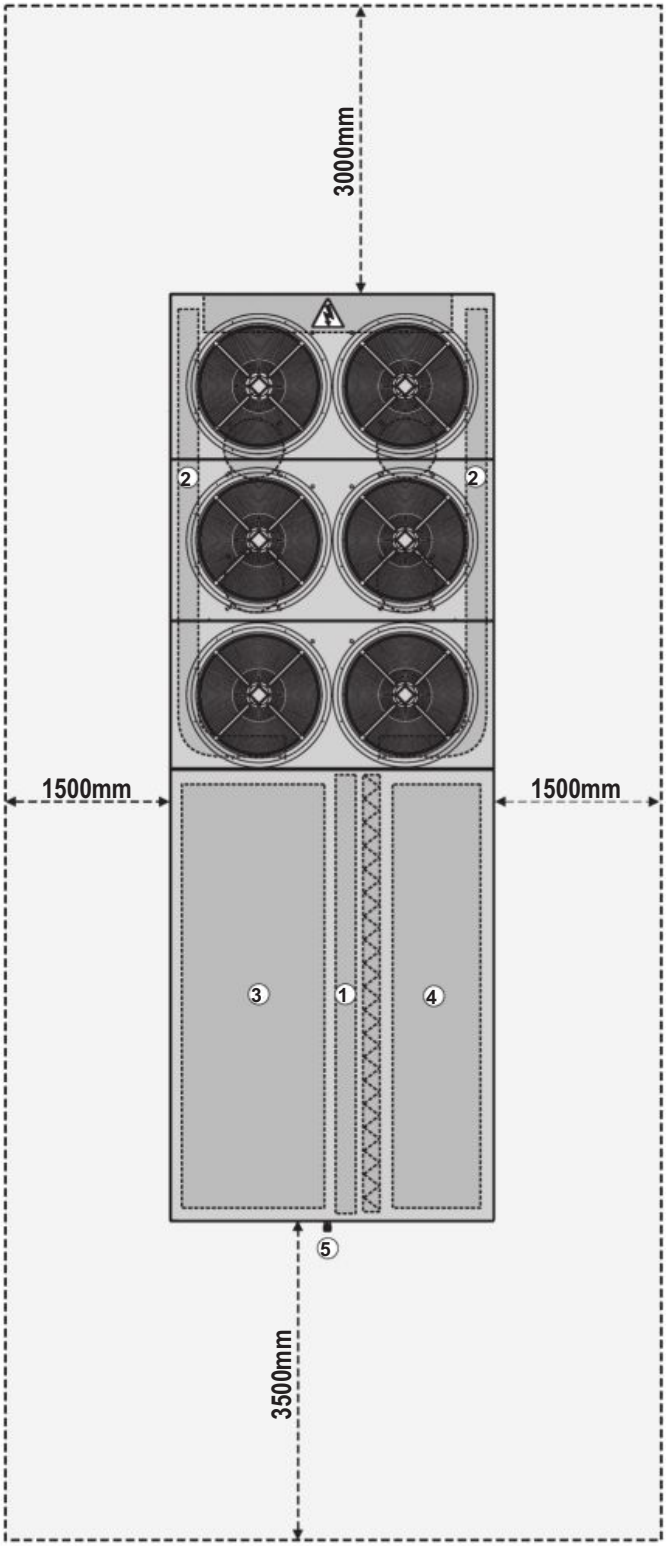

LEGEND

1. Indoor coil
2. Outdoor coil
3. Supply
4. Return
5. Condensates outlet

Note: Unit not designed to have overhead obstruction.

PRE-ASSEMBLY ROOFCURB (OPTIONAL)

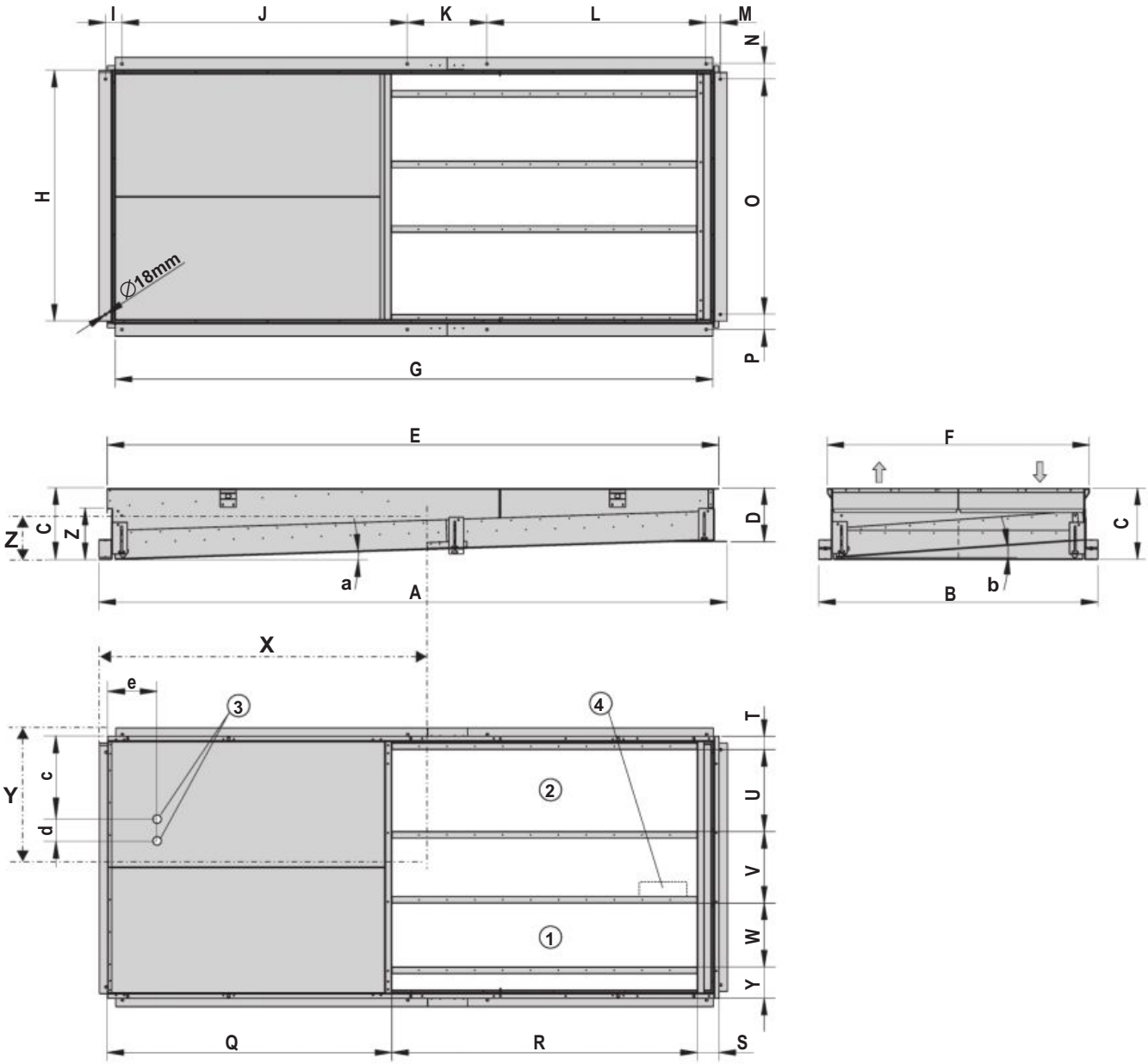

Space PF roofcurb	Weight (kg)	Centre of gravity (mm)			Maximum slope	
		X	Y	Z	a	b
415 / 480	290	1.517	940	290	2º (3,5%)	4º (7,0%)
420 à 960	385	2.507	1.050	228	2º (3,5%)	4º (7,0%)
1100 / 1200	475	3.222	1.050	228	1º (1,7%)	2º (3,5%)

LEGEND

1. In Space PF assemblies with lower discharge (Mwx0) 1)
2. In Space PF assemblies with lower return (Mw0y) 1)
3. Electric power supply connection Ø 64mm
4. Circulation area for the hydraulic connections of the optional hot water auxiliary coil

1) The available assemblies can be consulted on page 6 of this brochure

Space PF roofcurb	A	B	C	D	E	F	G	H	I	J	K	L	M	N	O	P	Q	R	S	T	U	V	W	Y	c	d	e
415 / 480	3238	2101	536	400	3112	1975	3007	1873	128	2146	0	760	103	114	1773	114	1248	1700	164	101	617	539	481	237	818	100	413
420 à 960	4728	2101	536	400	4602	1975	4498	1873	123	2148	600	1650	107	114	1773	114	2138	2300	164	101	617	539	481	237	818	100	415
1100 / 1200	6077	2101	536	400	5951	1975	5847	1873	118	2538	600	2609	111	114	1773	114	3089	2698	164	101	617	539	481	237	813	100	157

SPACE AQUA XF

Compact water-air rooftop units

Packaged unit ***all in one***
Silent *operation*
Configuration ***flexibility***
Plug Fan *with EC HEE motor (optional)*

Cooling capacity: *106,8 to 183,1 kW*
Heating capacity: *121,8 to 226,6 kW*

Cooling only

Cooling & heating

Heat recovery

Air filtration

Free cooling

Dehumidification

R410A

Description

The **Space Aqua range** are compact, horizontal and autonomous water to air units, rooftop-type design.

They are equipped with all the components required for the correct air conditioning to the installation.

- **RXF series:** Units for **cooling** operation.
- **IXF series:** Units for **reversible heat pump** operation.

The unit is connected directly to an air distribution ductwork without additional elements or equipment, pipes, cables, etc. taking up no floor space at all. This design reduces the cost of installation, facilities connections and ensures reliable operation.

The range of capacities of these units allows for the air conditioning of medium and large surface areas used for business or industry.

A vast number of options meet many operating requirements, such a:

- Recovery of the extracted air energy.
- Free-cooling.
- Air renewal.
- Indoor air quality control.
- Air filtration.
- Auxiliary devices for heating.
- Extension of operating limits for adaptation to extreme temperatures.

These units are equipped with centrifugal fans, plates exchangers, air coils, hermetic scroll compressors and electronic control with microprocessor, optimized components for the refrigerant R-410A.

All of the units are tested and checked in the factory.

Range

RXF - IXF series	Models	Dimensions L x W x H
2 circuits / 2 compressors	415 - 480	3326 x 2205 x 1873 (mm)
	420 - 485 - 540 - 600	4816 x 2205 x 1573 (mm)
2 circuits / 4 compressors	650 - 720	4816 x 2205 x 1873 (mm)

Note: Dimensions for the standard configuration.

Compliance

Machinery Directive 2006/42/EC (MD)
Electromagnetic Compatibility Directive 2014/30/EU (EMC)
Low Voltage Directive 2014/35/EU (LVD)
Pressure Equipment Directive 2014/68/EU (Category 2) (PED)
RoHS Directive 2011/65/EU (RoHS)
Eco-design Directive 2009/125/EC (Eco-design)
Energy Labelling Directive 2017/1369/EU (Eco-labelling)
Harmonised Standard: EN 378-2:2012 (Refrigerating systems and heat pumps - Safety and environmental requirements).

Operation limits

Condicions		Cooling	Heating
Air inlet	Minimum	14ºC BH	10ºC
	Maximum	22ºC BH	27ºC
water	Minimum	5ºC ❶❸	5ºC ❷❸
	Maximum	55ºC ❶	35ºC ❷

❶ Temperature of outlet water.
❷ Temperature of inlet water.
❸ Where there is risk of freezing of the plate exchanger will be required the use of glycol water.

UNIT COMPONENTS

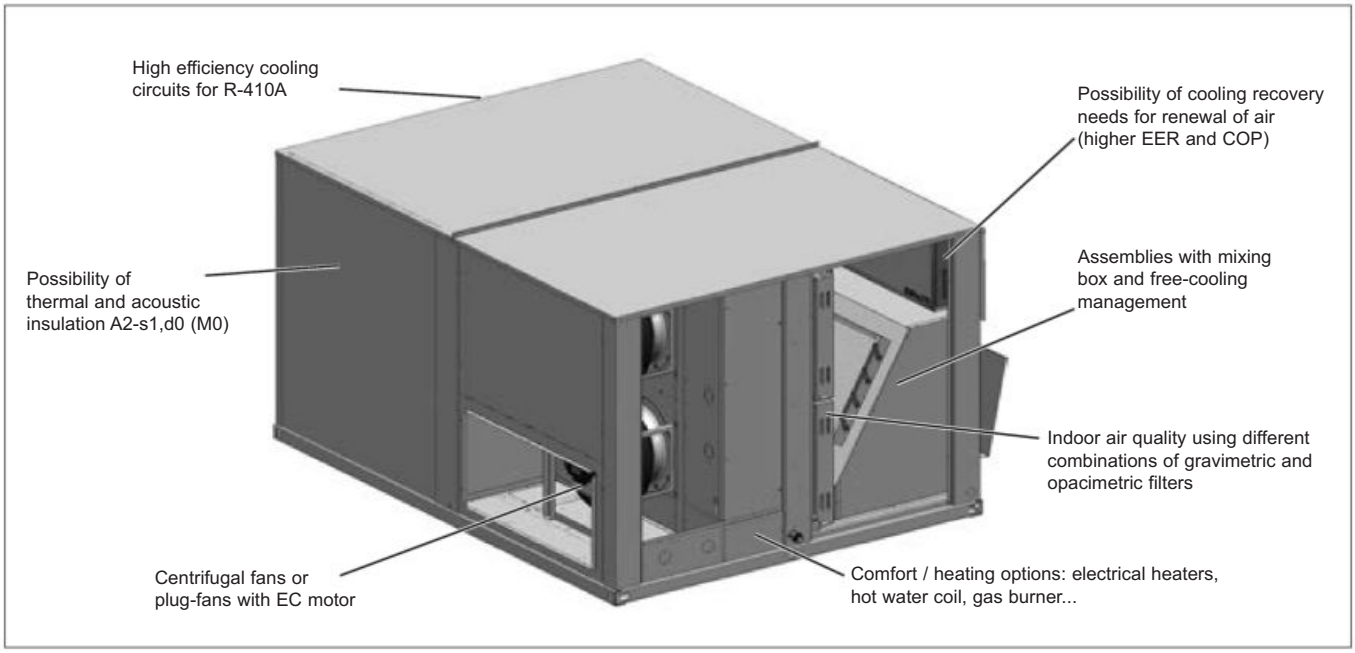

Casing

- Casing made of galvanised steel metal with polyester paint, white colour RAL 7035. Thermal insulation, 9 mm thick, with B-s3,d0 (M1) fire classification.
- Self-supporting frame. Hinges + quarter-turn latches mounted on the access panels to filters, supply fans, compresssors and electrical cabinet.

Cooling circuit

- Hermetic scroll-type compressors with sound insulation, assembled over antivibration mounts. Control of phase equilibrium and the direction of rotation.
- Crankcase heater.
- Thermostatic expansion valves with external equalisation.
- Liquid receivers.
- Four-way cycle reversing valves (heat pump units).
- Acid-resistant filters dryer.

Indoor unit

- Centrifugal fan(s) coupling by pulleys and belts. Electric motors with tensioner, class F, IP55 and internal thermal protection. One, two or three double-intake turbines, with an impeller of front-curved blades.Greased spherical bearings, with no maintenance required..
- Reusable air filters, mounted on a frame.
- Coils with copper pipes and aluminium fins.
- Condensates drainage pan

Outdoor unit

- Welded stainless steel plate exchangers.

Protections

- High pressure pressostat
- Low pressure pressostat.
- Compressor discharge temperature control.
- Main door switch.
- Magnetothermic protection switches for the compressor(s) power line and fan motor.
- Automatic switch in the control circuit.
- Anti-freeze protection built into the control (heat pumps).
- Water flow switch (heat pump units).
- Condensation and evaporation pressures control with three-way valve.

Electrical cabinet

- Complete and fully wired electrical cabinet.
- Insulated panel cover to prevent condensation.
- Forced ventilation of the electrical cabinet.
- Protection IP55.
- Transformer for power supply without neutral in electrical panel.
- Main ground connection.
- Compressor and fan motor contacts.

CIATrtc electronic control

The CIATrtc control consist of a µPC MEDIUM control board, sensors, a pGD1 graphic terminal and a TCO user terminal (optional).

This system uses a RS485 field-bus to manage additional components.

A BMS card (optional) allows the control board to be connected to a centralised technical management system.

It also manages a local connection between units through a pLAN network (µPC MEDIUM Local Area Network), allowing data and information to be exchanged between units, for a maximum of 15 units.

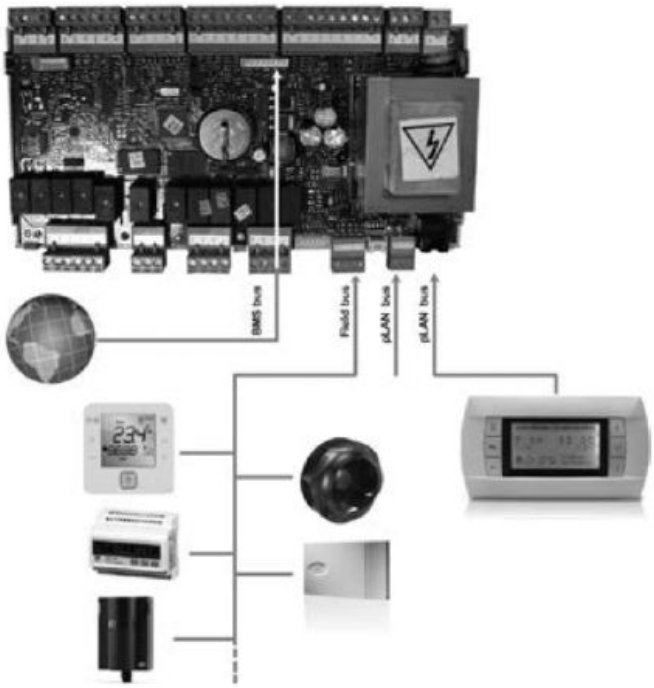

Main functions:

- Selection of setpoint and operating mode: HEATING / COOLING / AUTO / VENTILATION.
- Continuous control of the operating parameters.
- Display of the values measured by the sensors.
- Compressors time delays.
- Defrosting management (in heat pump units).
- Control of the supply air temperature.
- All-seasons operation via the condensation and evaporation pressure control with proportional three-way valve.
- Setpoint compensation based on the outdoor temperature.
- Hourly and weekly schedule.
- Fire protection.
- Diagnosis of faults and general alarm.

Optional functions:

This control is used to manage addition components such as:

- External air damper for the renewal of fresh air, depending on the temperature of the mixed air or depending on the air quality sensor.
- Mixing box for thermal, enthalpic or thermoenthalpic free-cooling.
- Cooling circuit for the recovery of the extracted air energy.
- Auxiliary electrical heaters: two-stage with on/off control or single-stage with proportional control.
- Hot water coil with 3-way valve, with proportional or on/off control.
- Gas burner with proportional control.
- Humidifier with proportional or on/off control.
- Air flow rate controller (with centrifugal fans).
- Clogged filter pressostat.
- Smoke detection station.
- Refrigerant leak detector.
- Air quality sensor for measuring CO_2 and/or volatile compounds.
- Energy meter and and calculation of the cooling and heating capacities.
- Zoning into 2 areas with dampers.

pGD1 terminal:

This terminal, fitted on the electrical cabinet, is very easy to use. It provides detailed explanations of control in easy to understand English. No decoding is required.

Only 6, large, easy-to-use buttons are required to maneuver through the entire menus.

This terminal is used to:

- Carry out initial programming of the unit.
- Modify operating parameters.
- Switch the unit ON / OFF.
- Select the operating mode.
- Adjust the setpoints.
- Display the variables controlled and sensor values measured.
- Display the current alarms and their historical record.

TCO user terminal (optional):

This terminal can be installed on the electrical cabinet, instead of pGD1 terminal. In this case, the remote connection of the pGD1 terminal is posible. Please consult “Control options”.

TCO terminal is used to:

- Switch the unit ON / OFF.
- Select the operating mode.
- Adjust the setpoints.
- Display the installation’s temperatures and humidity, outdoor temperature, supply air temperature, CO2 sensor and opening of the outdoor damper.
- Display alarms codes.

FACTORY OPTIONS AND ACCESSORIES

Configuration options

(Depending on the indoor air circulation)

Montage	Légende
Mwxy x — Soufflage d´air (0 : standard, 1 : option, 2 : option) w — Reprise d´air (0 : standard, 1 : option, 2 : option) M — Type de montage	I = Soufflage d´air R = Reprise d´air N = Entrée d´air neuf E = Extraction d´air

Standard assembly

- **M0 assemblies:** Change of supply and/or return air position in the indoor circuit.

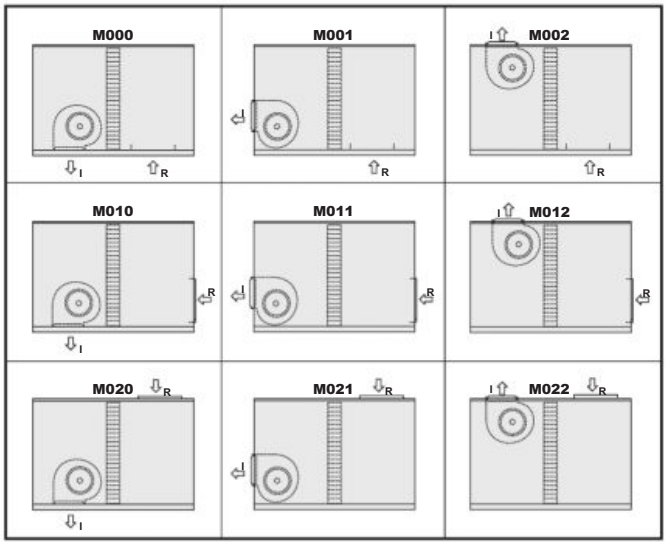

Assemblies with mixing box and free-cooling

- **MS assemblies:** Fresh air intake with damper, interlocked with return damper (mixing box of 2 dampers).

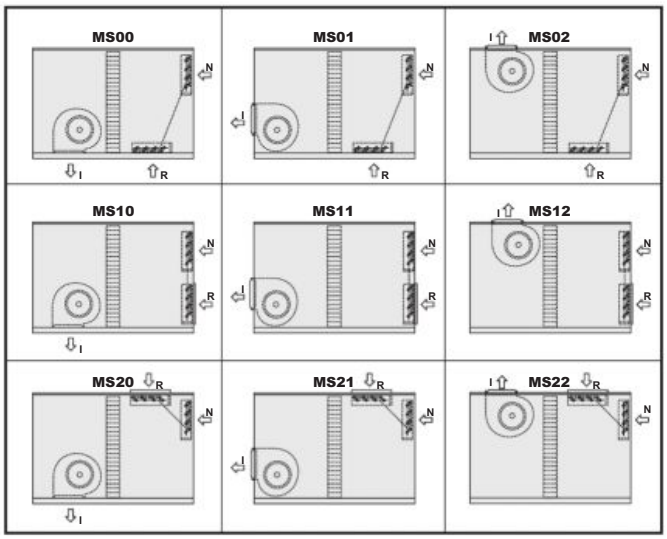

- **ME assemblies:** Axial air extraction fan (mixing box of 3 dampers).

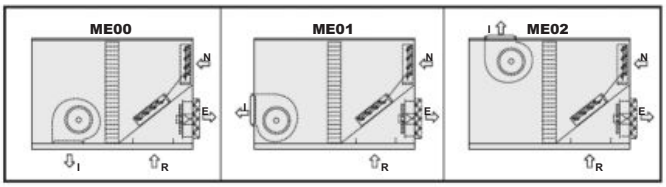

- **MA assemblies:** Axial return and air extraction fan (mixing box of 3 dampers).

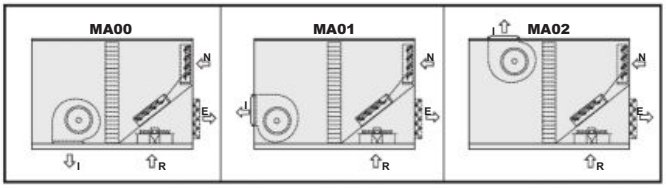

- **MC0 assemblies:** Electronic lower EC plug-fan (mixing box of 3 dampers).

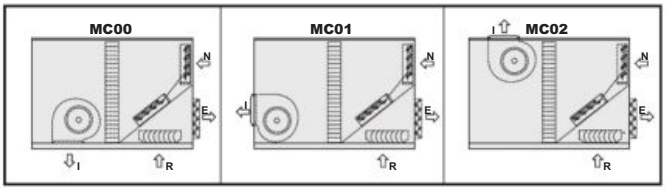

- **MRC0 assemblies:** Lower EC plug-fan (mixing box of 3 dampers) + cooling recovery circuit.

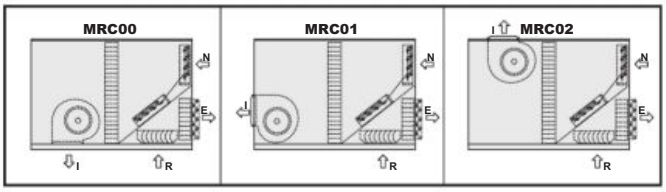

- **MC1 assemblies:** Centrifugal fan or EC plug-fan in top box (mixing box of 3 dampers).

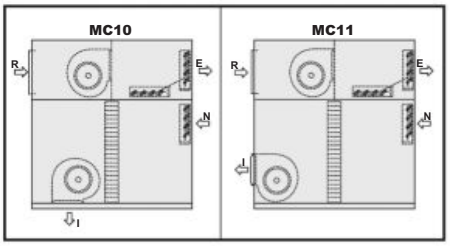

- **Montajes MRC1:** Centrifugal fan or EC plug-fan in top box (mixing box of 3 dampers) + cooling recovery circuit.

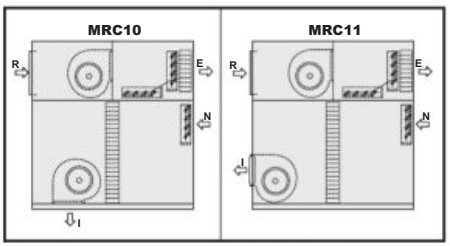

External environment options

Temperature

- Thermal and acoustic insulation 50 mm thick, with fire classification Euroclase A2-s1, d0 (M0).

Cover loss:

Conditions	Winter	
Indoor	20ºC	50% HR
Outdoor	-20ºC	94% HR
9mm NBR (std)	1790 W	2.0% HC
50mm rock wool	437 W	0.4% HC

Conditions	Summer	
Indoor	27ºC	50% HR
Outdoor	35ºC	40% HR
9mm NBR (std)	615 W	1.00% TCC
50mm rock wool	151 W	0.24% TCC

- Anti-freeze protection for low outdoor temperatures (GREAT COLD):
  - Electrical heater for protection of the components of the electrical cabinet. This is compulsory if the outdoor temperature is lower than -8ºC WB. With an outdoor temperature lower than -16ºC WB will be compulsory a reinforced resistance.
  - Compressor with protection for low temperature (supplementary crankcase heater). This is compulsory if the outdoor temperature is lower than -8ºC WB.
  - Dampers of the mixing box with spring for automatic closing in case of a tension cut. This is compulsory if the outdoor temperature is lower than -8ºC WB.
  - Electrical heater for antifreeze protection of dampers of the mixing box. This is compulsory if the outdoor temperature is lower than -12ºC WB.
  - Hot water coil circuit with anti-freeze technology based on the water temperature: mandatory for an outdoor temperature lower than -20ºC WB. This protection is made up of a circulation pump and two sensors inserted in the input and the output of the coil.

    Consult for percentages of glycol water above 20%..

Humidity

- Stop-drop in the indoor air coil.

  Recommended in cases where a high moisture content in the air is foreseen or when the air flow is high.
- Stop-drop at the fresh air intake. This stop-drop and the thermoenthalpic free-cooling are necessary in cases where a high moisture content in the air is foreseen.
- Tropicalised components on the electrical cabinet with protective varnish: control board, cards and terminals.
- Tropicalised motors and fans (please consult).

Corrosion

- Coils (indoor and/or auxiliary) with copper pipes and copper fins.
- INERA® coils (indoor and/or auxiliary) with copper pipes and fins of an aluminium alloy of high performance and great resistance to the corrosion.
- Coils (indoor and/or auxiliary) with copper pipes and aluminium fins with polyurethane and blygold coating.
- Condensate drain pan for the indoor circuit in stainless steel.

Comfort / heating options

- **Auxiliary hot water coil,** with three-way valve.

  This option always incorporates an anti-freeze thermostat as safety system.
- **Auxiliary electrical heaters,** awith two power stages and on/off control, for assembly and connection inside the unit.

  Note: the differential pressure switch for checking the air flow is included with centrifugal fan.
- Natural or propane **gas burner** with modulating actuator, in accordance with the Gas Directive 2009/142/EC, installed inside a module attached to the supply of the unit, in assemblies wtih lateral supply. Available for all the models, except 415 and 480.

  Important: it's compulsory the differential pressure switch for checking the air flow with centrifugal fan.

  Note: with this option, it's recommended to install the differential pressure switch for detecting clogged filters.

  Note: a protection kit of low temperature is available for an outdoor temperature lower than -15ºC.

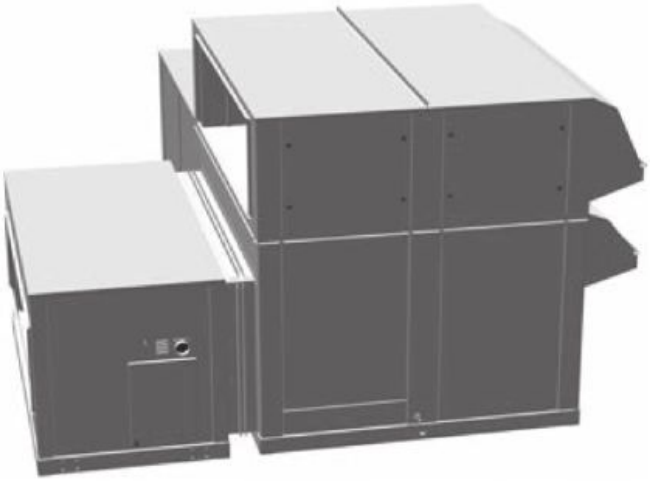

Comfort / indoor air quality options

- Different combinations of filters are available:
  - Gravimetric filters G4.
  - Gravimetric filters G4 of low pressure drop (l.p.d.).
  - Gravimetric filters G4 + opacimetric folded filters M6, F7, F8 or F9.
  - Gravimetric filters G4 + opacimetric folded filters F7 or F9 of low pressure drop.

- Dual-stage of opacimetric folded filters (F+F standard or F+F of low pressure drop). With this option, a technical consultation must be made due to changes in unit dimensions (with MS assembly and top or bottom return).

Classification of the filters according to the new ISO 16890 Standard:

- G4 → ISO Coarse 60%
- G4 b.p.c. → ISO Coarse 65%
- M6 → ISO ePM10 60%
- F7 → ISO ePM1 50%
- F7 b.p.c. → ISO ePM1 60%
- F8 → ISO ePM1 65%
- F9 → ISO ePM1 80%
- F9 b.p.c. → ISO ePM1 90%

- Air quality sensor for installation in the environment or duct-mounted (attached picture) to enable measuring CO_2.

Energy saving / recovery options

EC plug-fans

- Supply and return EC electronic plug-fans directly coupled with variable control speed and flow rate controller.

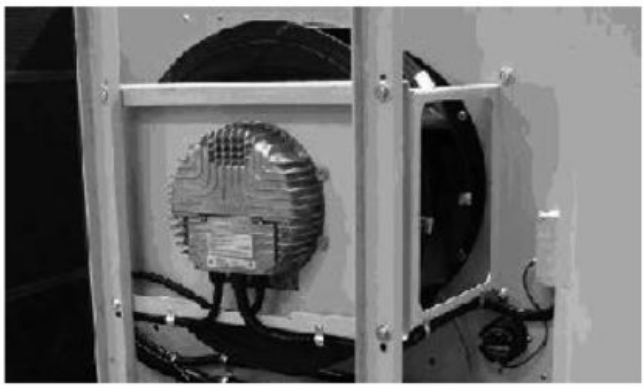

In tertiary sector installation, a high percentage of the annual air conditioning energy consumption comes from the use of fans for transporting air. Using fans which are more efficient has a direct impact on reducing consumption.

Plug-fans with direct drive and variable speed offer the following advantages:

- Elimination of friction losses during transmission thanks to the direct drive.
- Greater aeraulic efficiency of the rotor (reactive blades with an optimized profile), running at very high operating pressures.
- Greatly increased motor efficiency. Permanent magnets DC motors activated using electronic switching integrated into the motor itself.
- Variable speed to ensure a constant supply air flow rate, independent of the filters clogging level.
- Measuring the flow rate thought a calibrated section at the fan intake and a differential pressure sensor allows the control to handle the flow rate reliably and precisely in both on CAV and VAV systems.

Free-cooling management

- Running the unit in free-cooling mode allows it to make best use of outdoor air conditions when these are more favourable than the return air conditions. This allows the cooling capacity to be reduced. The percentage of outdoor air can vary between 0% and 100%.

There are three options for free-cooling management:

- Thermal, by comparing the temperatures.
- Enthalpic, by comparing the enthalpies. Recommended in cases where a high moisture content in the air is foreseen.
- Thermoenthalpic, by comparing the enthalpies and correcting for temperature. This is the optimum solution as it takes the variability of the climate into account.

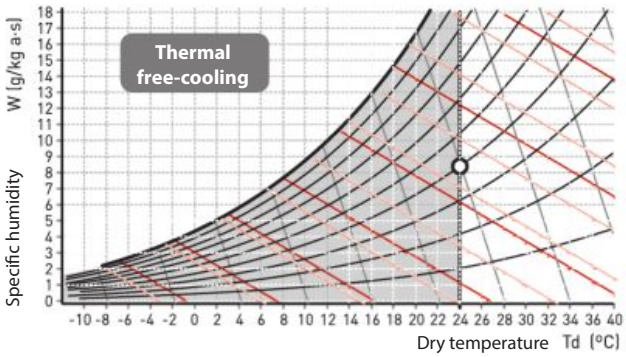

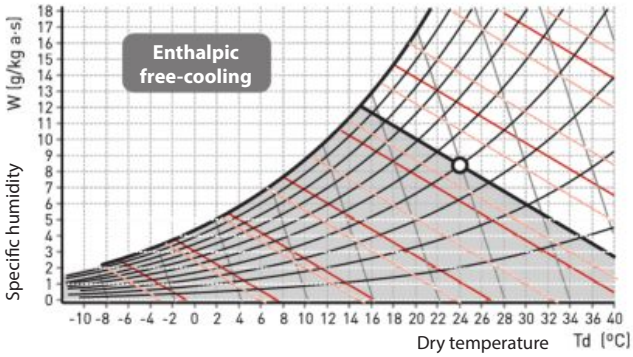

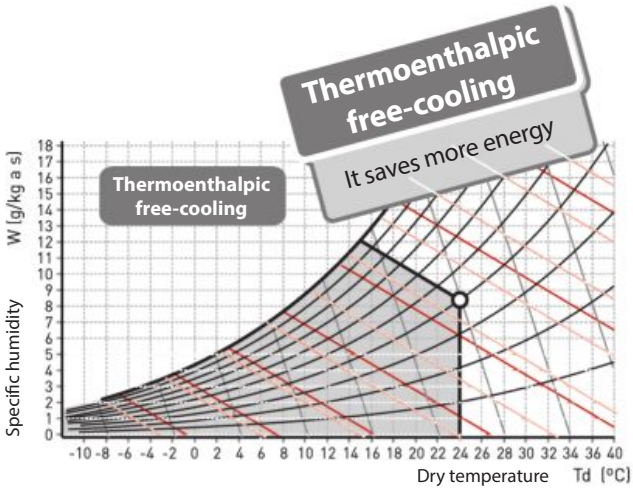

Compressors in tandem

- This setting improves the management of stages, and therefore the energy effi ciency of the unit. Models 650 and 720 in tandem as standard.

Active recovery

- Thermodynamic circuit dedicated to recovery of the extracted air energy, with independent control, adapted to the air refreshing requirements in order to raise COP, EER and seasonal efficiency of the unit set. The circuit is composed of:
  - Centrifugal fan or EC plug-fan (MRC0 or MRC1 assemblies).
  - Air circuit comprised of coils with copper pipes and aluminium fins.
  - Thermostatic expansion valve with external equalisation.
  - Hermetic scroll-type compressor with sound insulation, assembled over antivibration mounts.
  - Crankcase heater.
  - Four-way cycle reversing valve (heat pump units).
  - Anti-acid dehydrator filter.
  - Condensates drain pan.

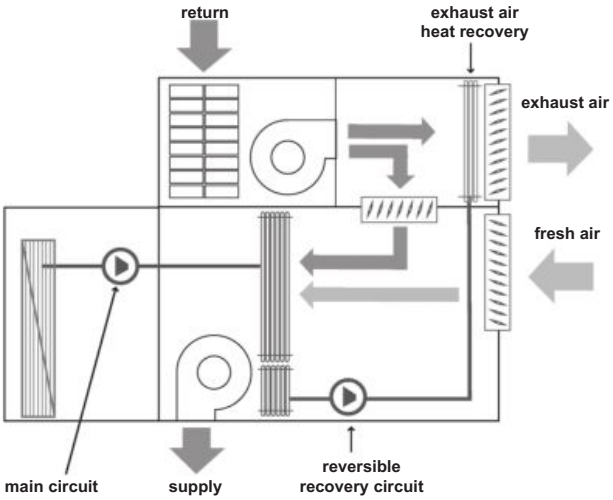

Safety options

- Soft starter of the optional centrifugal supply air and/or return air fans, increasing the warm-up time, mainly intented to installations with fabric ducts. Compulsory with motors of 15 kW and above.
- Differential pressure switch to detect clogged filters.
- Differential pressure switch for checking the air flow, with centrifugal fan.
- Smoke detecting station in accordance with the NF S 61-961 standard.
- Refrigerant leak detector. This allows prompt identification of gas leaks, guaranteeing the safety of any people in the vicinity. Installation of the device ensures compliance with European standards F-GAS and EN378 as well as ASHRAE 15.

Installation options

- Supply and return centrifugal fans with high available pressure.
- Control of the overpressure with the MC0, MRC0, MC1 and MRC1 assemblies.
- Flexible hydraulic connections kit: 500 mm or 700 mm.
- Antivibration mounts made of rubber.
- Standardised pre-assembly roofcurbs made of galvanised steel panelling with polyester paint, thermally insulated. Adjustable height.

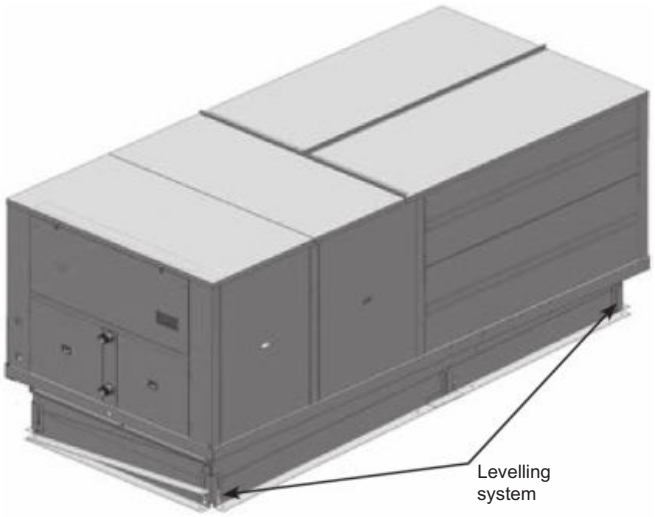

- Adaptation roofcurbs for the replacement of existing units on site.

Packing options

- Maritime packing SEI4C (with or without gas burner).
- Skis for transporting in closed container (except with assemblies MC1, MWC1 and MRC1).

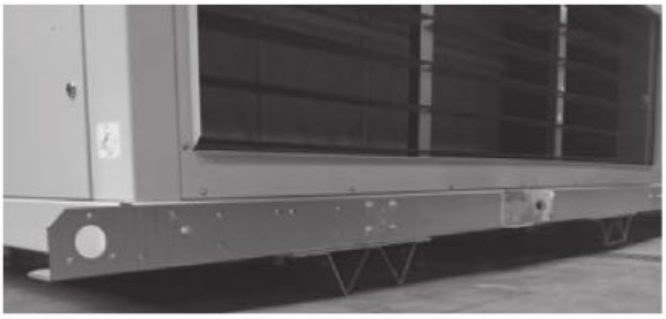

Electrical cabinet options

- Electrical power supply with neutral.
- Numeration of components in the electrical panel.
- Numeration of wired.
- High performance phase monitoring relay, which allows to adjust the protection settings (highly recommended for installations with power system voltage instability, lag between current and voltage, high level of electromagnetic disturbances EMC, etc

- Energy meter for monitoring of the power consumption of the installation.
- Energy meter and cooling and heating capacities measurement. The unit incorporates, in addition to the energy meter, mixing and supply enthalpic sensors with RS485 communication that enable the calculation of cooling and heating capacities.

Control / communication options

- TCO user terminal, for installation on the electrical cabinet, instead of pGD1 terminal.
- Control without pGD1 terminal (for units with shared terminal).
- Kit remote control to 200 meters with pGD1 terminal (pGD1 terminal + 2 TCONN bypass cards). In this case it´s possible to install the TCO terminal on the electrical cabinet.

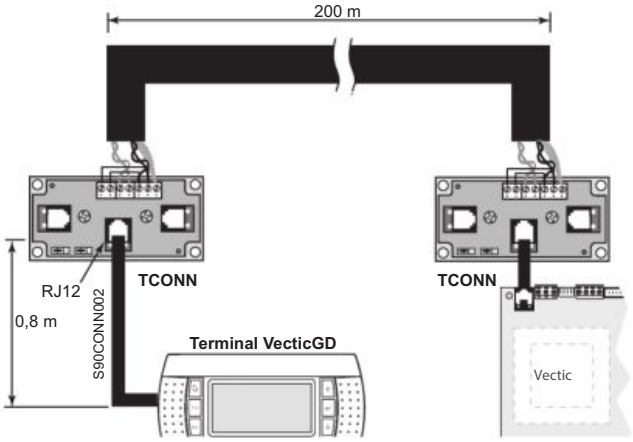

- Ambient temperature sensor with RS485 communication. By default the control incorporates a NTC sensor.

  Note: An ambient sensor with RS485 communication is required for installation at more than 30 m.
- Two to four ambient temperature sensor with RS485 communication.
- Ambient T+RH sensor with RS485 (compulsory in units with enthalpic or thermoenthalpic free-cooling as optional). In this case also added outdoor air humidity sensor.
- Air quality sensor for installation in the environment or in duct to enable measuring CO_2.
- Change to **AVANT+** electronic control with TCO terminal as standard and pGD1 terminal as optional. This control does not manage cooling recovery circuit or gas burner.

Communication

CIATrtc and **AVANT+** controls allow the connection to a centralised technical management system by using a specific BMS card for some of the following communication protocols:

- RS485 serial cards for network communication with protocols: Carel, Modbus, LonWorks®, BACnet™ MSTP, Konnex.
- Ethernet pCO Web card for network communication with protocols: Modbus TCP/IP, BACnet™ Ethernet, TCP/IP, SNMP V1-2-3, FTP and HTTP.

Supervision solutions

Different solutions of supervision are available bases on the dimensions of the installation for unit fitted with Ethernet pCO Web and RS485 Carel / Modbus cards.

- **pCO Web**

  It is the solution for the management and supervision of a single unit if this incorporates the Ethernet pCO Web card.
- **PlantWatchPRO3**

  This is a solution designed for the monitoring of small and medium-size installations, capable of manage up to 30 units. Suitable for technical environments, no parts are in movement. It's available in two versions: panel and wall.

  Includes: 7 " touch display, buzzer for notifications, 1 USB port and 1 SD card slot for downloading reports, charge devices models and applying service packs.

  For this option, each unit needs one RS485 Carel / Modbus board.
- **BOSS**

  This is the solution for the management and supervision of air-conditioning installations with up to 300 units. Integrated Hotspot Wi-Fi.

  It offers advanced monitoring and maintenance functions and allows zones and groups to be created to simplify the management of the installation. It also allows energy meters to be integrated to monitor the installation electricity consumption.

  BOSS is available in two versions:

  • CPU device.

  • CPU device, monitor, keyboard and screen.

  For this option, each unit needs one RS485 Carel / Modbus board.

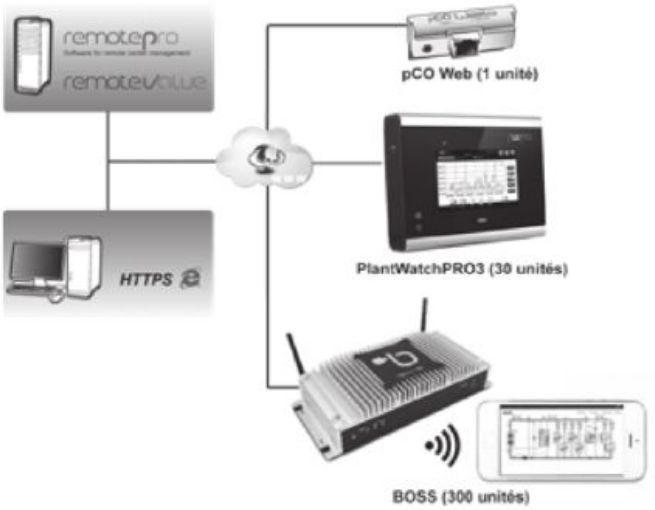

These systems are used to manage the installation remotely. All the information on the system can be accessed via a simple Internet connection. The online interface, the same one used by the local user, enables monitoring and complete configuration of the installation: from the office or anywhere else the user happens to be.

To control multiple sites remotely, there are special tools dedicated to centralized management, such as **RemotePRO** and **RemoteValue**.

TECHNICAL CHARACTERISTICS

Space Aqua XF		415	420	480	485	540	600	650	720
Cooling capacities	Cooling capacity ❶ (kW)	106,82	109,07	115,29	122,32	136,53	156,54	162,26	183,05
	Power input ❸ (kW)	23,52	21,44	26,06	24,03	28,85	31,48	33,57	41,19
	EER performance	4,54	5,09	4,42	5,09	4,73	4,97	4,83	4,44
Heating capacities	Heating capacity ❷ (kW)	121,84	125,86	134,31	139,45	160,45	181,33	193,99	226,85
	Power input ❸ (kW)	27,81	25,99	32,27	29,94	34,75	38,11	39,22	49,89
	COP performance	4,38	4,84	4,16	4,66	4,62	4,76	4,95	4,55
Outdoor circuit	Nominal water flow (m^3/h)	22,9	23,1	24,8	25,4	29,0	32,0	34,0	40,0
	Pressure drop (m.w.c)	11,5	11,6	11,3	11,6	11,8	5,7	7,0	11,1
	Type of hydraulic connections	Gas threaded							
	Diameter of connections	2" M	2 1/2" M	2" M	2 1/2" M				
Indoor circuit supply fan	Nominal air flow (m^3/h)	18.000	18.000	18.200	18.200	20.400	24.000	27.500	30.000
	Available static pressure (mm.w.c)	12,5	12,5	15,0	15,0	15,0	15,0	17,5	17,5
	Type	Centrifugal							
	Number x Diameter (mm)	2 / 2							
	Motor output (kW)	2 x 2,2	2 x 1,5	2 x 2,2	2 x 1,5	2 x 2,2	2 x 3	2 x 4	2 x 4
	Power input (kW)	2,72	2,04	2,94	2,18	2,88	4,06	5,15	6,21
	Speed (r.p.m.)	688	535	717	554	597	639	654	677
Compressor	Type	Scroll							
	Number of compressors	2						4	
	Number of stages	2						4	
	Number of circuits	2						2	
	Oil type	Copeland 3MAF 32cST, Danfoss POE 160SZ, ICI Emkarate RL 32CF, Mobil EAL Artic 22CC							
	Volume of oil (l)	2 x 6,2	2 x 6,2	2 x 6,2	2 x 6,2	2 x 6,2	2 x 6,2	4 x 3,3	4 x 6,2
Electrical characteristics	Mains voltage	400 V / III ph / 50 Hz (±10%)							
	Power supply	3 Wires + Ground							
Maximum absorbed current	Compressor(s) (A)	70,3	70,3	79,6	79,6	91,1	102,6	100,4	122,0
	Indoor fan (A)	10,0	7,1	10,0	7,1	10,0	13,8	18,0	18,0
	Control (A)	1,8	1,8	1,8	1,8	1,8	1,8	1,8	1,8
	Total (A)	82,1	79,2	91,4	88,5	102,9	118,2	120,2	141,8
Refrigerant	Type	R-410A							
	Global warming potential (GWP) ❹	2.088							
	Charge (kg)	35,0	31,7	35,5	32,0	33,0	34,0	34,0	40,0
	Environment impact (tCO2eq)	73,1	66,2	74,1	66,8	68,9	71,0	71,0	83,5
Dimensions	Length (mm)	3.326	4.816	3.326	4.816	4.816	4.816	4.816	4.816
	Width (mm)	2.205	2.205	2.205	2.205	2.205	2.205	2.205	2.205
	Height (mm)	1.873	1.573	1.873	1.573	1.573	1.573	1.873	1.873
Weight	(kg)	1.514	1.723	1.580	1.773	1.853	1.927	2.055	2.117
Condensate outlet Ø		1 1/4" adaptor							

❶ Cooling capacity calculated in accordance with the UNE-EN-14511 standard given for inlet/outlet water temperature conditions of 30/35ºC and indoor air temperature of 27ºC (19ºC WB).

❷ Heating capacity calculated in accordance with the UNE-EN-14511 standard given for inlet water temperature conditions of 15ºC and indoor temperature conditions of 20ºC..

❸ Total power input by compressor and motorised fans under nominal conditions, calculated in accordance with the UNE-EN-14511 standard.

❹ Climatic warming potential of a kilogram of fluorinated greenhouse gas in relation to a kilogram of carbon dioxide over a period of 100 years.

Pressure drop in the exchanger

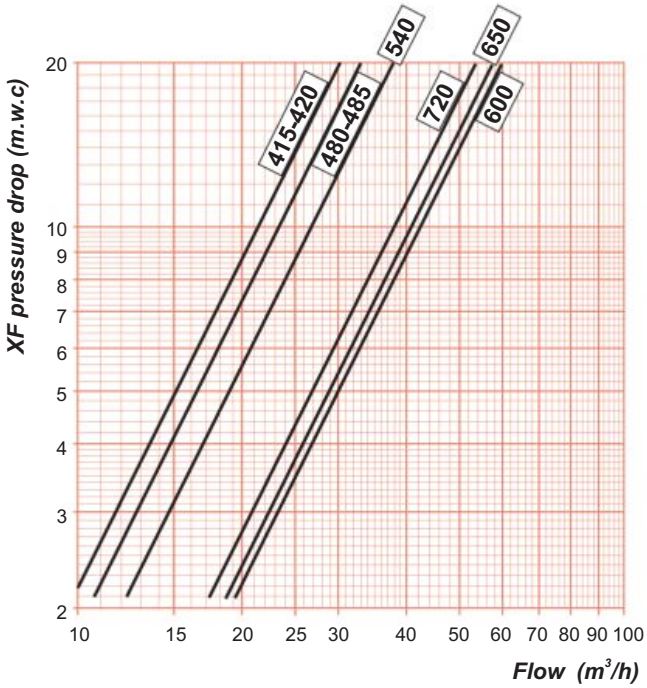

Overall dimensions of the different assemblies

Space Aqua XF	M0, MS, MA, ME, MC0, MRC0 assemblies			MC1, MRC1 assemblies		
	Length (mm)	Width (mm)	Height (mm)	Length (mm)	Width (mm)	Height (mm)
415 / 480	3326	2205	1873	3326	2205	2605
420 / 485 / 540 / 600	4816	2205	1573	4816	2205	2305
650 / 720	4816	2205	1873	4816	2205	2605

Electrical connections

Nº	Space Aqua XF		415 à 720
1	Main power supply	400 III (±10%)	3 wires + ground
2	Remote connection of pGD1 terminal (by default installed on the electrical cabinet) ❶		telephone cable 6 wires standard (RJ12 connector)
3	Connection of TCO user terminal on the electrical cabinet (optional) ❷		2 wires for power supply 230V + 1 shielded cable for communication type AGW20 / 22 (1 braided pair + drainwire + shielding)
4	Remote off/on (optional)		2 wires
5	General fault signal (optional)		2 wires
6	Circulation pump signal for HWC (antifreeze sec.) (opt.)		1 wire
7	Ambient probe	NTC (std)	2 wires
		RS485 (opt.)	5 wires ❸
8	Air quality sensor (opt.)		3 wires

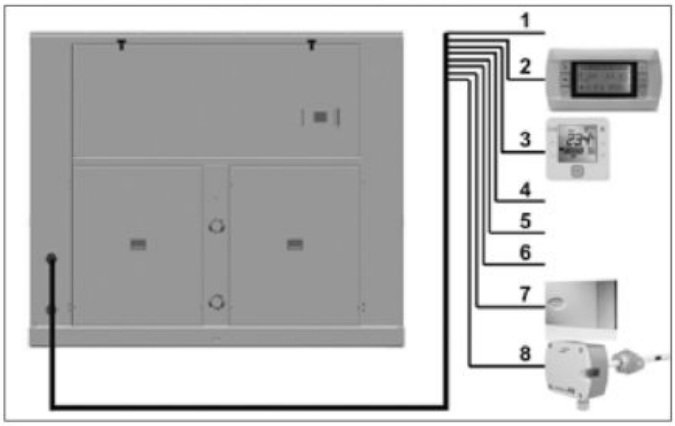

❶ In this case, it´s posible to install the TCO terminal on the electrical cabinet.
❷ It's necessary that the terminal uses the same power supply that the control board.
❸ Up to four RS485 ambient sensors can be connected in series on the field-bus of the control board.

Options for the outdoor unit

For more detailed information about the various options, please consult the technical brochure of this series.

ISPK

Modular compact heat pumps

ISPK compact

Scroll compressors ***in tandem***
Refrigerant ***R-410A***
Flexibility *of configuration*
Outdoor ***plug-fan***
with EC HEE motor

Cooling capacity: *19,1 to 114,9 kW*
Heating capacity: *19,3 to 119,9 kW*

Cooling & heating

Air filtration

Free cooling

R410A

Description

Air to air compact units with vertical construction for indoor use only.

- **ISPK series:** Air-air reversible heat pump units.
  Ten models are available:
  - 90, 120, 160 and 180:
    1 circuit and 2 compressors
  - 200, 240, 280, 320, 360, 420 and 485:
    2 circuits and 4 compressors

These units are equipped with hermetic scroll compressors and tandem configuration, as well as pluf-fan EC for indoor and outdoor circuits (optionally centrifugal fan with belts and pulleys for indoor module). This allows to get a high seasonal performance.

The units are supplied in 2 modules, **outdoor module** and **indoor module** for building work installation as compact version or split version, according to the choice.

A vast number of options meet numerous operating demands.

All of the units are tested and checked in the factory.

Operating limits

Inlet air conditions		Cooling	Heating
Indoor coil	Minimum	14 °C BH	10 °C
	Maximum	22 °C BH	27 °C
Outdoor coil	Minimum	12 °C	-10 °C BH
	Maximum	45 °C	15 °C BH

Compliance

Machinery Directive 2006/42/EC (MD)

Electromagnetic Compatibility Directive 2014/30/EU (EMC)

Low Voltage Directive 2014/35/EU (LVD)

Pressure Equipment Directive 2014/68/EU (Category 2) (PED)

RoHS Directive 2011/65/EU (RoHS)

Eco-design Directive 2009/125/EC (ECO-DESIGN)

Energy Labelling Directive 2017/1369/EU (ECO-LABELLING)

Harmonised Standard: EN 378-2:2012 (Refrigerating systems and heat pumps - Safety and environmental requirements).

Unit components

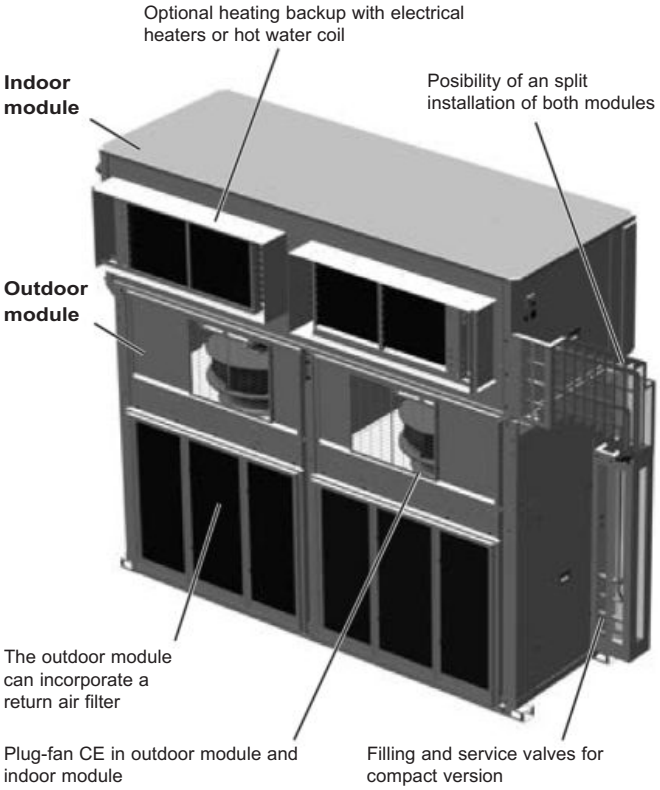

Outdoor module

- Casing made of galvanised steel metal with polyester paint, white colour RAL 7035. Self-supporting frame.

Outdoor air circuit

- EC electronic supply plug-fans directly coupled with variable control speed and flow rate controller. In tertiary sector installation, a high percentage of the annual air conditioning energy consumption comes from the use of fans for transporting air. Using fans which are more efficient has a direct impact on reducing consumption.
- Coil(s) with copper pipes and aluminium fins.
- Condensate drain pan.

Cooling circuit

- Hermetic scroll-type compressors in tandem design that improves the management of stages and the part load efficiencies. Sound insulation, assembled over antivibration mounts. Control of phase equilibrium and the direction of rotation.
- Crankcase heater.
- Thermostatic expansion valve(s) with external equalisation.
- Four-way cycle reversing valve(s).
- Suction accumulator, anti-acid dehydrating filter(s), liquid receiver(s).
- Service valves for cooling connections and refrigerant charge, when the unit is supplied in Compact version.

  Posibilility of installation in split version, with optionals service valves.
- Cooling connections for welding.

Electric panel

- Complete and fully wired electric panel. Insulated panel cover to prevent condensation. Protection IP55.
- Transformer for power supply without neutral included in the electrical panel.
- Main ground connection.
- Compressor(s) and fan(s) motor contacts.

Protections

- High and low pressure pressostats.
- Compressor discharge temperature control.
- Non-return valve built into the compressor.
- Main door switch.
- Magnetothermic protection switches for the compressors power line and fans motor.
- Automatic switch in the control circuit.

Indoor module

- Casing made of galvanised steel metal with polyester paint, white colour RAL 7035. Self-supporting frame.

Indoor air circuit

- Coil(s) with copper pipes and aluminium fins.
- EC electronic supply plug-fans directly coupled with variable control speed and flow rate controller. In tertiary sector installation, a high percentage of the annual air conditioning energy consumption comes from the use of fans for transporting air. Using fans which are more efficient has a direct impact on reducing consumption.

  Plug-fans with direct drive and variable speed offer the following advantages:
  - Elimination of friction losses during transmission thanks to the direct drive
  - Greater aeraulic efficiency of the rotor (reactive blades with an optimized profile), running at very high operating pressures.
  - Greatly increased motor efficiency. Permanent magnets DC motors activated using electronic switching integrated into the motor itself.
  - Variable speed to ensure a constant supply air flow rate, independent of the filters clogging level.
  - Measuring the flow rate thought a calibrated section at the fan intake and a differential pressure sensor allows the control to handle the flow rate reliably and precisely in both on CAV and VAV systems.
- Reusable air filters, assembled on a frame.
- Condensate drain pan.

Cooling circuit

- Thermostatic expansion valve(s) with external equalisation

Protections

- Main door switch.

ELECTRONIC CONTROL

CIATrtc control

The **CIATrtc** control consist of a µPC MEDIUM control board, sensors, a pGD1 graphic terminal and a TCO user terminal (optional).

This system uses a RS485 field-bus to manage additional components.

A BMS card (optional) allows the control board to be connected to a centralised technical management system.

It also manages a local connection between units through a pLAN network (µPC MEDIUM Local Area Network), allowing data and information to be exchanged between units, for a maximum of 15 units.

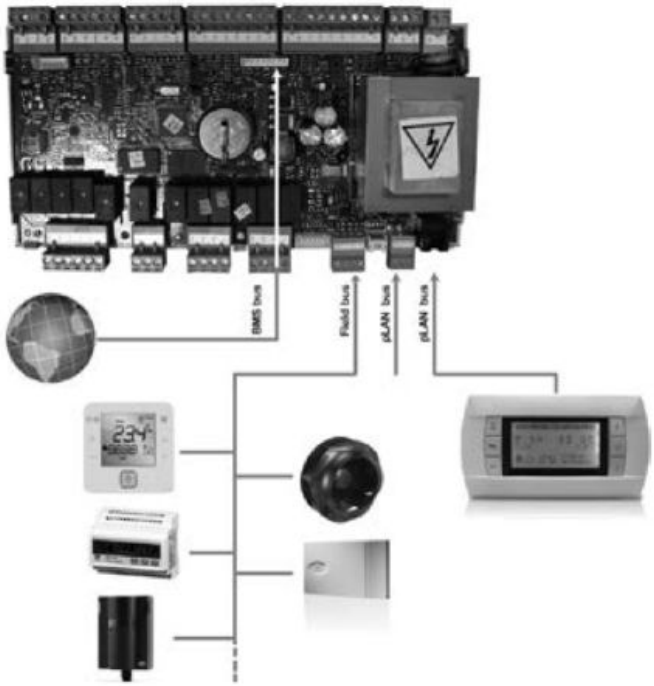

Main functions:

- Selection of setpoint and operating mode: heating / cooling / auto / ventilaTIOn.
- Continuous control of the operating parameters.
- Display of the values measured by the sensors.
- Compressors time delays.
- Defrosting management (in heat pump units).
- Control of the supply air temperature.
- All-seasons operation via the condensation and evaporation pressure control.

  The management of the unit in cooling mode is based on the principle of a high floating pressure. The condensation pressure setpoint is continually calculated depending on the outdoor temperature. This pressure is regulated by adjusting the air flow on the oudoor fans.
- Setpoint compensation based on the outdoor temperature.
- Hourly and weekly schedule.
- Fire protection.
- Diagnosis of faults and general alarm.

Optional function:

This control is used to manage addition components such as:

- External air damper for the renewal of fresh air, depending on the temperature of the mixed air or depending on the air quality sensor.
- Mixing box for thermal, enthalpic or thermoenthalpic free-cooling.
- Auxiliary electrical heaters: two-stage with on/off control or single-stage with proportional control.
- Hot water coil with 3-way valve, with proportional or on/off control.
- Humidifier with proportional or on/off control.
- Air flow rate controller (with centrifugal fans).
- Clogged filter pressostat.
- Refrigerant leak detector.
- Air quality sensor for measuring CO2.
- Energy meter and calculation of the cooling and heating capacities.

pGD1 terminal:

This terminal, fitted as standard on the electrical cabinet, is very easy to use. It provides detailed explanations of control in easy to understand English. No decoding is required.

Only 6, large, easy-to-use buttons are required to maneuver through the entire menus.

This terminal is used to:

- Carry out initial programming of the unit.
- Modify operating parameters.
- Switch the unit ON / OFF.
- Select the operating mode and adjust the setpoints.
- Display the variables controlled and sensor values measured.
- Display the current alarms and their historical record.

TCO user terminal (optional):

This terminal can be installed on the electrical cabinet, instead of pGD1 terminal. In this case, the remote connection of the pGD1 terminal is posible. Please consult “Control options”.

TCO terminal is used to:

- Switch the unit ON / OFF.
- Select the operating mode.
- Adjust the setpoints.
- Display the installation’s temperatures and humidity, outdoor temperature, supply air temperature, CO2 sensor and opening of the outdoor damper.
- Display alarms codes.

OPTIONS

Options for the outdoor module

Outdoor environment

Corrosion

- Coil with copper pipes and copper fins.
- INERA® coil with copper pipes and fins of an aluminium alloy, of high performance and great resistance to the corrosion.
- Coil with copper pipes and aluminium fins with polyurethane and Blygold® coating.

Humidity

- Tropicalised electric panel.
- Tropicalised motors and fans (please consult).

Installation

- Antivibration mounts made of rubber.
- Service valves for cooling connections and refrigerant charge, when the unit is supplied for installation as split version.
- Oil separator for cooling connections with maximum equivalent length of the cooling line greater than 50 metres, optional only available when the units are supplied in 2 modules, outdoor module and indoor module for installation as split version.
- Position of air supply of the outdoor unit:

• Lateral: by default

• Upper: only available when the units are supplied for installation as split version.

- Air coil protection grille (it's not compatible with the air filter).
- Gravimetric filters in the return air. The filters frame is removable, and upon request, it is possible to supply the frame separately with the unit SP, to be joined on site (width = 53 mm)

Acoustic

- Acoustic insulating cover for compressor

Electric panel

- Electrical power supply with neutral.
- Energy meter for monitoring of the power consumption of the installation. Available if the unit does not incorporate electrical heaters (optional upon request).

Options for the indoor module

Outdoor environment

Humidity

- Stop-drop in the indoor air coil. Recommended in cases where a high moisture content in the air is foreseen or when the air flow is high.
- Stop-drop in the outdoor air intake.

Corrosion

- Coil with copper pipes and copper fins.
- INERA® coil with copper pipes and fins of an aluminium alloy, of high performance and great resistance to the corrosion.
- Coil with copper pipes and aluminium fins with polyurethane and Blygold® coating (indoor unit and/or hot water coil).
- Condensates drain pan in stainless steel.

Comfort / heating options

- Hot water auxiliary coil, with three-way valve and proportional control.

  If the unit includes hot water coil and free-cooling, and works with negative temperatures of outdoor air, an anti-freeze thermostat as safety system is mandatory.
- Electrical heaters with assembly in two stages and proportional control.

Comfort / indoor air quality options

- Filtration of the supply air:
  - Gravimetric filter G4.
  - Gravimetric filter G4 + creased opacimetric filters M6 to F9.

  Classification of the filters according to the new ISO 16890 Standard:
  - G4 → ISO Coarse 60%
  - M6 → ISO ePM10 60%
  - F7 → ISO ePM1 50%
  - F8 → ISO ePM1 65%
  - F9 → ISO ePM1 80%
- Air quality sensor to enable measuring CO2 for installation in the environment or duct-mounted (attached picture)

Security

- Soft starter of the supply and/or return centrifugal fans which prolongs the set time mainly aimed at installations with cloth ducts. Compulsory for motors with an output of 15 kW and above.
- Differential pressostat for the detection of clogged filters (only for optional centrifugal fans).
- Differential pressostat for the detection of clogged filters.
- Smoke detecting station in accordance with the NF S 61-961 standard
- Refrigerant leak detector (with CIATrtc control). This allows prompt identification of gas leaks, guaranteeing the safety of any people in the vicinity. Installation of the device ensures compliance with European standards F-GAS and EN378 as well as ASHRAE 15, EN378 and ASHRAE 15.

Installation

- Antivibration mounts made of rubber
- Centrifugal fan with belts and pulleys for indoor module (only for models 90 to 360).
- Position of supply and/or return of the indoor unit air.

- Assemblies **with mixing** box with 2 motorised damper for air renewal and free-cooling:

Models 90 to 360 (plan view)

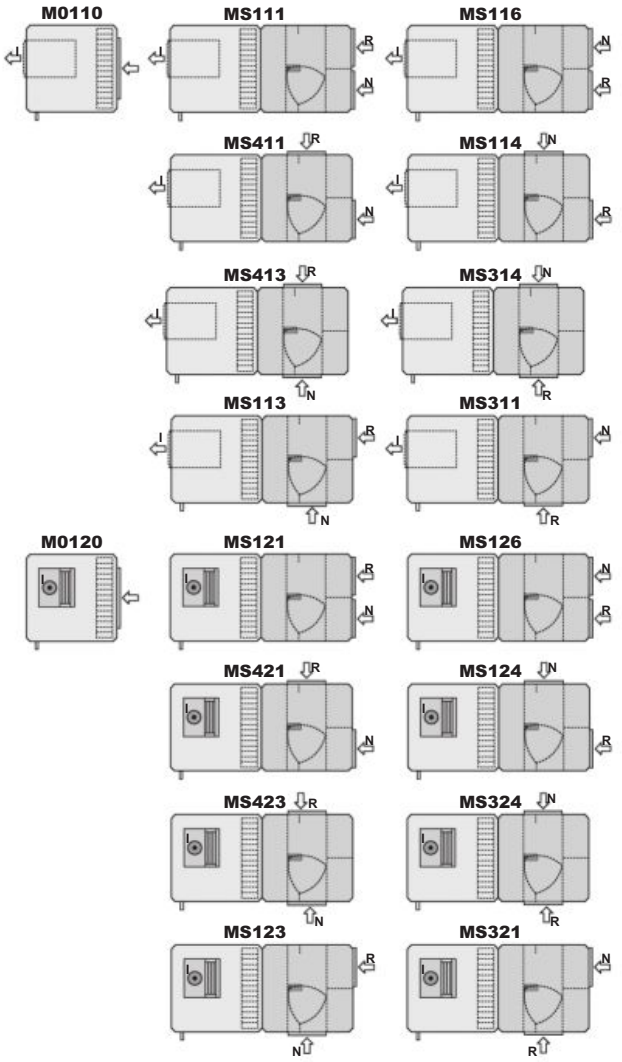

Models 420 and 485 (raised view)

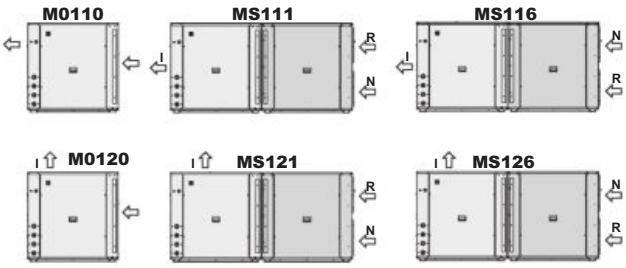

Air circulation

I = Supply	N = Fresh air inlet	Air inlet
R = Return	E = Air extraction	Air outlet

Designation

Mwxyz

Assembly:	Return:	Supply:	Fresh air:
0 = Standard	1 = Rear	1 = Front	1,6 = Rear
S = Outdoor air intake with damper	2 = Top	2 = Top	2,7 = Superior
	3 = Right-hand side (*)		3 = Right-hand side (*)
	4 = Left-hand side (*)		4 = Left-hand side (*)

(*) Seen in the direction of airflow

Important: In compact version, the connection of the mixing box with its structural support is under the responsability of the installer.

- **Free-cooling** management:

Running the unit in free-cooling mode allows it to make best use of outdoor air conditions when these are more favourable than the return air conditions. This allows the cooling capacity to be reduced. The percentage of outdoor air can vary between 0% and 100%.

There are three options for free-cooling management:

- Thermal, by comparing the temperatures.
- Enthalpic, by comparing the enthalpies. Recommended in cases where a high moisture content in the air is foreseen.
- Thermoenthalpic, by comparing the enthalpies and correcting for temperature. This is the optimum solution as it takes the variability of the climate into account.

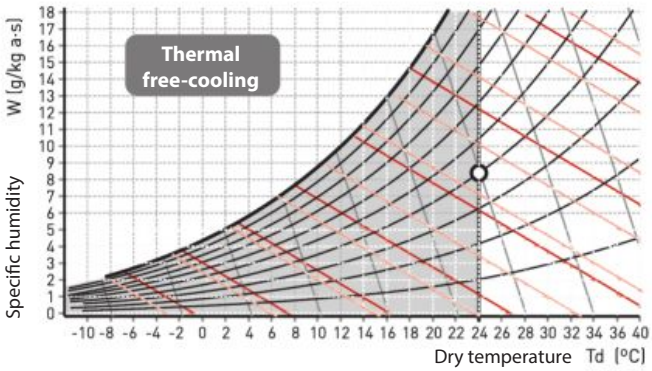

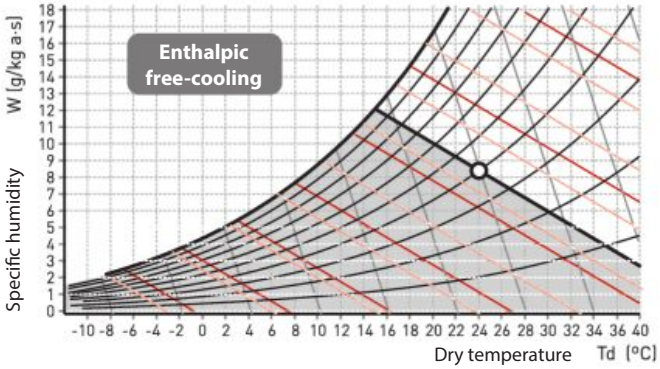

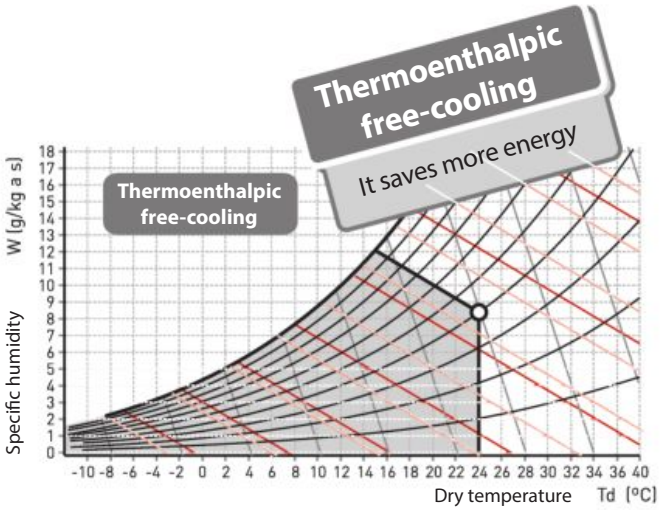

Options for the electronic control

CIATrtc optionst

- TCO user terminal, for installation on the electric panel, instead of pGD1 terminal.
- Control without pGD1 terminal (for units with shared terminal).
- Kit remote control to 200 meters with pGD1 terminal (pGD1 terminal + 2 TCONN bypass cards). In this case it´s possible to install the TCO terminal on the electric panel.

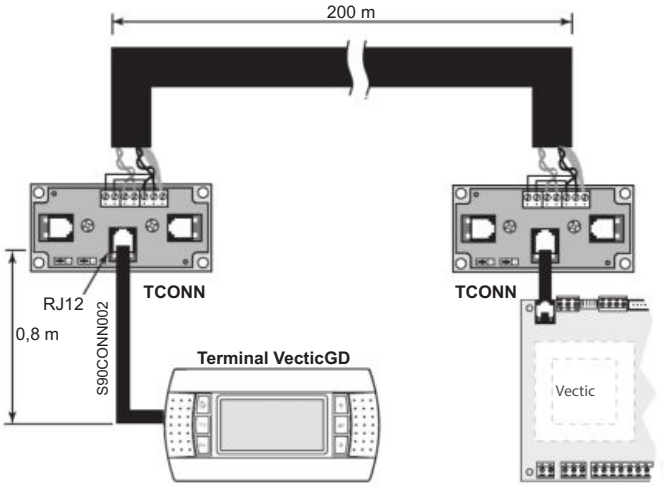

- Ambient temperature probe with RS485 communication. By default the control incorporates a NTC probe

  Note: An ambient probe with RS485 communication is required for installation to more than 30 m.
- Two to four ambient temperature probe with RS485 communication.
- Ambient T+RH probe with RS485 (compulsory in units with enthalpic or thermoenthalpic free-cooling as optional). In this case also added outdoor air humidity probe.
- Air quality probe for installation in the environment or in duct to enable measuring CO2.

Communication options

CIATrtc control allows the connection to a centralised technical management system by using a specific BMS card for some of the following communication protocols:

- RS485 serial cards for network communication with protocols: Carel, Modbus, LonWorks®, BACnetTM MSTP, Konnex.
- Ethernet pCO Web card for network communication with protocols: Modbus TCP/IP, BACnetTM Ethernet, TCP/IP, SNMP V1-2-3, FTP and HTTP.

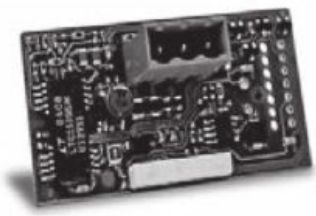

Carel and Modbus

Ethernet pCO Web

Supervision solutions

Different solutions of supervision are available according to the dimensions of the installation.

- **pCO Web**

  It is the solution for the management and supervision of a single unit if it incorporates the Ethernet pCO Web card.
- **PlantWatchPRO3**

  It is a solution designed for the monitoring of installations of medium - small dimensions, with ability to manage up to 30 units. Suitable for technical environments, it has no parts in movement. It's available in two versions: panel and wall.

  Includes: 7 " touch display, buzzer for notify cations, 1 USB port and 1 SD card slot for downloading reports, charge devices models and applying service packs.

  In this case, each unit needs one RS485 Carel / Modbus board.
- **BOSS**

  This is the solution for the management and supervision of air-conditioning installations with up to 300 units. It performs advanced monitoring and maintenance functions and enables creating areas and groups which simplify the management of the installation. It also allows the integration of energy meters for monitoring the power consumption of the installation.

  PlantVisorPRO2 is available in two versions:

  • **Box:** comprised of CPU and, optionally, by monitor and keyboard.

  • **Touch:** this includes CPU and touchscreen in the one device.

  In this case, each unit needs one RS485 Carel / Modbus board.

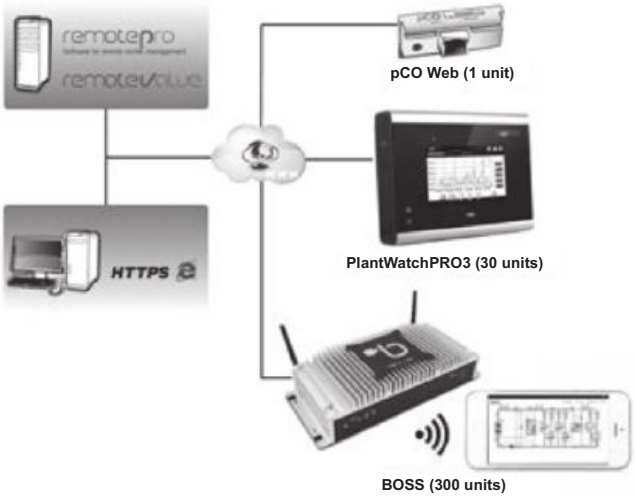

These systems allow the installation in remote management. Through a single connection to the Internet is accessed the information system. The Web interface, which is available for the local user, allows the monitoring and the complete configuration of the installation: from the office or any other user's current location.

For remote control of multiple sites, there are dedicated tools for centralized management as **RemotePRO** and **RemoteValue.**

TECHNICAL CHARACTERISTICS (EN-14511-2018)

Outdoor module ISPK		90	120	160	180	200	240	280	320	360	420	485
Cooling capacities	Cooling capacity ❶ (kW)	19,10	25,33	33,94	39,74	47,23	52,07	60,59	69,66	81,52	105,52	114,87
	Power input ❸ (kW)	7,72	8,98	12,95	15,73	18,43	18,75	22,00	25,97	32,28	41,44	45,14
	EER performance	2,47	2,82	2,62	2,53	2,56	2,78	2,75	2,68	2,53	2,55	2,54
	SEER	3,63	3,78	3,57	3,33	3,61	3,93	3,89	3,85	3,78	3,57	3,55
	ηs	142%	148%	140%	130%	141%	154%	153%	151%	148%	140%	139%
Heating capacities	Heating capacity ❷ (kW)	19,27	27,63	37,16	44,64	51,99	57,49	64,65	74,07	84,77	108,66	119,86
	Power input ❸ (kW)	6,43	9,13	11,96	14,59	17,18	17,77	20,07	23,75	29,41	35,29	40,02
	COP performance	3,00	3,03	3,11	3,06	3,03	3,23	3,22	3,12	2,88	3,08	3,00
	SCOP	3,06	3,16	3,29	3,21	3,13	3,25	3,21	3,25	3,21	2,99	3,00
	ηs	119%	124%	129%	126%	122%	127%	125%	127%	126%	117%	117%
Outdoor fan	Nominal air flow (m^3/h)	7.000	10.000	13.000	13.000	19.000	23.000	23.000	24.400	24.400	30.000	35.000
	Available static pressure (mm.w.c)	20	20	20	20	20	20	20	20	20	20	20
	Type	Electronic plug-fan										
	Number / Diameter (mm)	1 / 500	1 / 560	1 / 560	1 / 560	2 / 560	2 / 560	2 / 560	2 / 560	2 / 560	2 / 560	4 / 500
	Motor output (kW)	2,7	3,0	4,7	4,7	2 x 3,0	2 x 3,0	2 x 4,7	2 x 4,7	2 x 4,7	2 x 4,7	4 x 2,7
	Power input (kW)	1,35	1,63	2,74	2,74	2 x 1,75	2 x 2,06	2 x 2,10	2 x 2,50	2 x 2,50	2 x 3,48	4 x 1,92
	Speed (r.p.m.)	1.700	1.500	1.750	1.750	1.500	1.500	1.750	1.750	1.750	1.750	1.700
Compressor	Type	Scroll										
	No. compress. / circuits / stages	2 / 1 /2				4 / 2 / 4						
	Oil type	Copeland 3MAF 32cST, Danfoss POE 160SZ, ICI Emkarate RL 32CF, Mobil EAL Artic 22CC										
	Volume of oil (l)	2,5	2,5	3,5	3,5	5,0	4,8	6,8	7,1	7,2	13,2	13,2
Cooling connections	Circuit 1: Liquid line	1/2"	1/2"	5/8"	5/8"	1/2"	5/8"	5/8"	5/8"	5/8"	5/8"	5/8"
	Circuit 1: Gas line	1 1/8"	1 1/8"	1 1/8"	1 1/8"	1 1/8"	1 1/8"	1 1/8"	1 1/8"	1 1/8"	1 3/8"	1 3/8"
	Circuit 2: Liquid line	-	-	-	-	1/2"	5/8"	5/8"	5/8"	5/8"	5/8"	5/8"
	Circuit 2: Gas line	-	-	-	-	1 1/8"	1 1/8"	1 1/8"	1 1/8"	1 1/8"	1 3/8"	1 3/8"
Refrigerant	Type	R-410A										
	Global warming potential (GWP) ❹	2.088										
	Load up to 7,5 m in split version (kg)	9,0	11,1	13,0	14,2	17,3	19,1	24,9	25,9	26,4	38,7	39,3
	Environment impact (tCO2 e)	18,8	23,2	27,1	29,6	36,1	39,9	52,0	54,1	55,1	80,8	82,1
	Load in compact version (kg)	8,4	10,5	12,0	13,2	15,3	17,1	22,9	23,9	24,4	36,7	37,3
	Environment impact (tCO2 e)	17,5	21,9	25,1	27,6	31,9	35,7	47,8	49,9	50,9	76,6	77,9
Electrical features	Mains voltage	400 V / III ph / 50 Hz (±10%)										
	Power supply	3 wires + gnd										
	Maximum absorbed current (A)	18,7	22,4	32,3	37,2	44,7	44,7	57,4	64,7	74,4	93,8	99,0
Dimensions	Length (mm)	1.191	1.471	1.471	1.471	2.186	2.746	2.746	2.746	2.746	3.484	3.484
	Width (mm)	860	860	860	860	860	860	860	860	860	860	860
	Height (mm)	1.437	1.717	1.717	1.717	1.437	1.717	1.717	1.717	1.717	1.717	1.717
Weight	(kg)	300	364	378	383	588	737	782	789	793	1.043	1.052

Indoor module ISPK		90	120	160	180	200	240	280	320	360	420	485
Indoor supply circuit fan	Nominal air flow (m3/h)	4.000	5.200	7.000	8.000	9.200	10.300	12.500	14.000	15.500	21.000	21.000
	Available static pressure (mm.w.c)	15	15	15	15	15	20	20	20	20	20	20
	Type	Electronic plug-fan										
	Number / Diameter (mm)	1 / 500	1 / 500	1 / 500	1 / 500	2 / 500	2 / 500	2 / 500	2 / 500	2 / 500	3 / 500	3 / 500
	Motor output (kW)	2,7	2,7	2,7	2,7	2 x 2,7	2 x 2,7	2 x 2,7	2 x 2,7	2 x 2,7	3 x 2,7	3 x 2,7
	Power input (kW)	0,63	0,86	1,32	1,38	2 x 0,71	2 x 0,95	2 x 1,10	2 x 1,32	2 x 1,58	3 x 1,50	3 x 1,50
	Speed (r.p.m.)	1.700	1.700	1.700	1.700	1.700	1.700	1.700	1.700	1.700	1.700	1.700
Max. absorbed current	Fan (A)	4,2	4,2	4,2	4,2	8,2	8,2	8,2	8,2	8,2	14,6	14,6
Dimensions	Length (mm)	1.190	1.190	1.520	1.520	2.183	2.144	2.804	2.804	2.804	2.974	2.974
	Width (mm)	950	950	1.028	1.028	950	950	1.028	1.028	1.028	1.209	1.209
	Height (mm)	731	731	731	731	731	731	800	800	800	1.091	1.091
Weight	(kg)	175	175	204	204	303	303	389	389	389	536	536

❶ Cooling capacity calculated in accordance with the EN-14511-2018 standard given for indoor temperature conditions 27ºC, (19ºC WB) and 35ºC outdoor temperature
❷ Heating capacity calculated in accordance with the EN-14511-2018 standard given for indoor temperature conditions 20ºC and 6ºC WB outdoor temperature.
❸ Total power input by compressors and motorised fans under nominal conditions, calculated in accordance with the EN-14511-2018 standard.
❹ Climatic warming potential of a kilogram of fluorinated greenhouse gas in relation to a kilogram of carbon dioxide over a period of 100 years.

Recommendations for the cooling connection, for split version

In split version, the outdoor module and indoor module must follow some recommendations

Outdoor unit top

Maximum equivalent length of the cooling line: 50 metres
For longer lenghts an oil separator must be user

Outdoor unit bottom

Maximum equivalent length of the cooling line: 30 metres

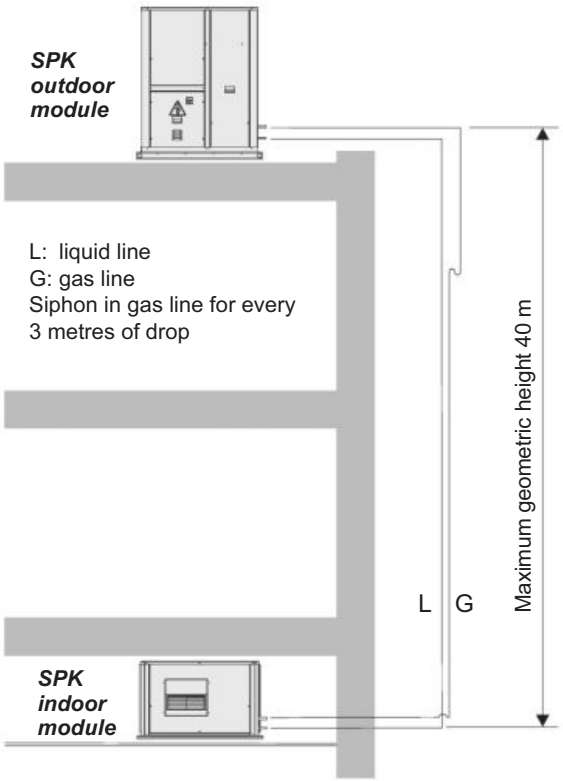

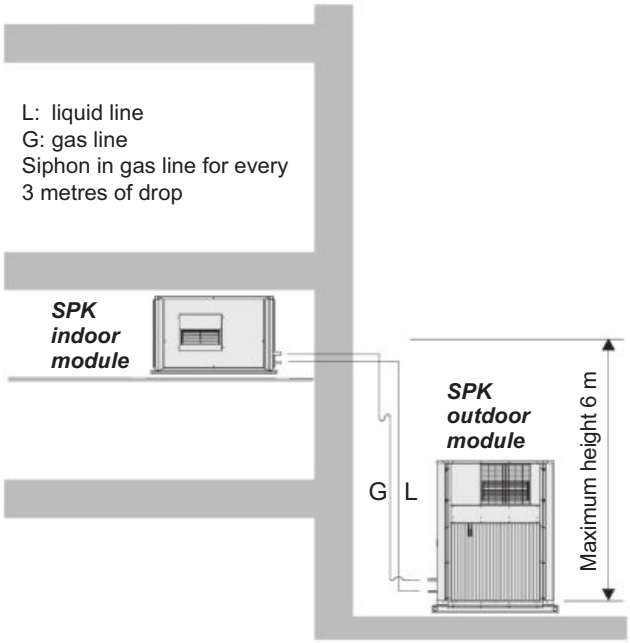

Note: when the unit is supplied for split version with the outdoor and indoor modules, can include optionally filling and service valves for the circuit connections and the charge of refrigerant until 7 m of distance.

Additional load of R-410A refrigerant

Additional load per linear metre of piping for equivalent maximum lengths exceeding 7 metres:

Nominal diameter (inches)	1/4”	3/8”	1/2”	5/8”	3/4”	7/8”	1”	1 1/8”
Interior section (cm2)	0,149	0,444	0,900	1,505	2,282	3,120	4,290	5,346
Liquid line charge (g/m)	19,3	57,0	115,0	193,5	292,3	404,1	550,3	685,7
Gas line charge (g/m)	--	0,2	0,4	0,7	1,0	1,4	2,0	2,5

Electrical connections between the modules

CIATrtc control

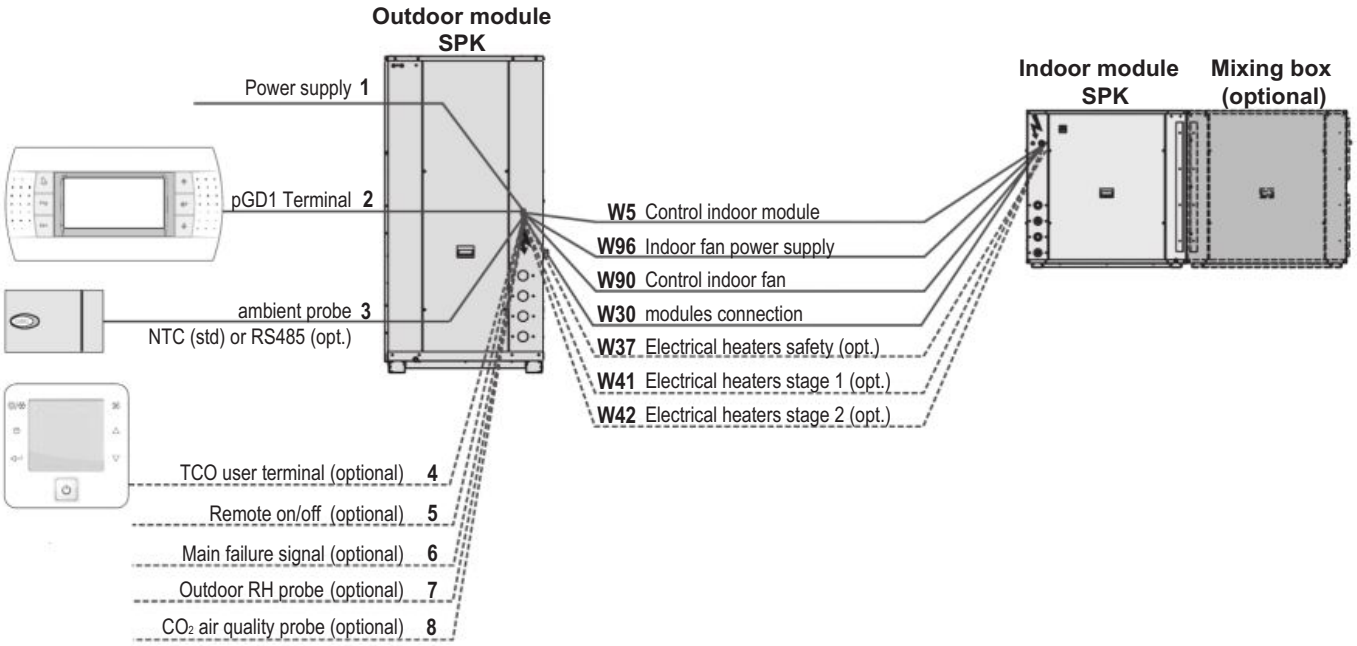

No.	ISPK		90	120	160	180	200	240	280	320	360	420	485
1	Power supply	400 III (±10 %)	3 + GND										
2	pGD1 terminal connection (standard in electrical panel)		Telephone cable 6 wires standard (RJ12 connector) (until 50 m)										
3	Ambient probe ❶	NTC	2 wires										
		RS485 ❷	5 wires										
4	TCO user terminal connection ❸		2 wires for power supply 230V + 1 shielded cable for communication type AGW20 / 22 (1 braided pair + drainwire + shielding)										
5	Remote on/off (optional)		2 wires										
6	Main failure signal (optional)		2 wires										
7	Outdoor RH probe (optional) ❶		3 wires										
8	CO_2 air quality probe (optional) ❶		3 wires										
W5 ❺	Control indoor module		5 wires										
W96 ❺	Indoor fan power supply		4 wires										
W90 ❺	Control indoor fan		7 wires										
W30 ❺	Modules connection	without free-cooling (std)	2 wires										
		free-cooling (opt.)	7 wires										
W37 ❺	Safety thermistors of electrical heaters (optional)		2 wires										
W41 ❺	Electrical heaters. stage 1 (optional) ❹		4 wires										
W42 ❺	Electrical heaters. stage 2 (optional) ❹		4 wires										

❶ Connection of probes by client
❷ It is possible connect from 1 to 4 ambient probes RS485 in series in the Field-bus of the control board.
❸ If the unit is going to be installed in an industrial environment with a high level of electromagnetic interference, it is recommended to shield the cables of the thermostat control.
❹ The power supply for the electrical heater must be protected by an automatic switch and/or fuses to be foreseen by the installer.
❺ Connection hose to connect the modules supplied to work in compact version.

Options for the indoor module

Centrifugal fan

Indoor module ISPK		90	120	160	180	200	240	280	320	360
Nominal air flow	(m^3/h)	4.000	5200	7.000	8.000	9.200	10.300	12.500	14.000	15.500
Available static pressure	(mm.w.c.)	15	15	15	15	15	20	20	20	20
Number / turbines		1 / 1				2 / 2				
Motor output	(kW)	1,1	1,1	1,5	2,2	2 x 2,2	2 x 3,0	2 x 3,0	2 x 3,0	2 x 4,4
Power input	(kW)	0,80	1,15	1,40	1,55	2 x 1,10	2 x 1,20	2 x 1,53	2 x 1,48	2 x 1,80
Speed	(r.p.m.)	959	906	793	798	1070	957	940	793	798
Maximum absorbed current	(A)	2,7	2,7	3,6	5,0	2 x 5,4	2 x 7,1	2 x 7,1	2 x 7,1	2 x 10,0

High pressure plug-fan

Indoor module ISPK		420	485
Nominal air flow	(m^3/h)	21.000	21.000
Available static pressure	(mm.w.c.)	20	
Maximum vailable static pressure	(mm.w.c.)	60	
Number / Diameter	(mm)	2 x 560	
Motor output	(kW)	2 x 4,7	
Power input	(kW)	3,7	
Speed	(r.p.m.)	1.750	
Maximum absorbed current	(A)	2 x 7,3	

Electrical heaters

Standard assembly in two stages (optional assembly in one stage with no over price)

Important : with centrifugal dan (optional), the air flow controller is included.

Available capacities

Indoor module ISPK	Total output (kW)	6	9	12	15	18	24	30	36	45	54
	Stage power (kW)	3 + 3	3 + 6	6 + 6	6 + 9	9 + 9	12 + 12	15 + 15	18 + 18	18 + 27	27 + 27
90 / 120	Current (A) (400V / IIIph / 50Hz)	8,7	13,0	17,3	Unavailable						
160 / 180		Unavailable		17,3	21,7	26,0	Unavailable				
200 / 240 / 280 / 320 / 360		Unavailable			21,7	26,0	34,6	53,4	52,0	Unavailable	
420 / 485		Unavailable							52,0	65,0	78,0

Frame for assembly of the auxiliary heater in the indoor supply fan :

Indoor module ISPK	Total output	Dimensions (mm)		
		A	B	C
90 / 120 (1 frame)	6 / 9 kW (1 row)	150	482	443
	12 kW (2 rows)	262	482	443
160 /180 (1 frame)	12 kW / 15 / 18 kW (1 row)	189	1.142	443
200 / 240 (1 frame)	15 / 18 kW (1 row)	189	1.142	443
	24 / 30 / 36 kW (2 rows)	297	1.142	443
280 / 320 / 360 (2 frames)	15 / 18 / 24 / 30 / 36 kW (1 row)	189	1.142	443
420 / 485 (2 frames)	36 / 45 / 54 kW (1 row)	189	1.142	443

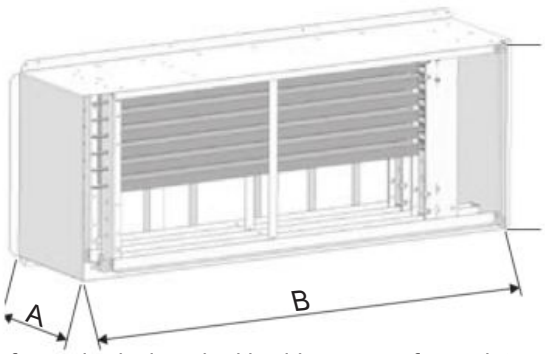

This frame is designed with side access for maintenance purposes.

In models with two supply fan outlets (two frames), the electrical heaters are distributed as symmetrically as possible between both frames.

Auxiliary hot water coil

Hot water coil assembled inside the unit with a three-way valve managed by the unit control for back-up during heating in heat pump units. In this case the air inlet temperature matches the air supply temperature of the indoor coil.

Indoor module ISPK			90	120	160	180	200	240	280	320	360
Air pressure drop		(mm.w.c.)	2,9	4,5	4,2	4,2	3,4	4,0	5,5	6,6	7,8
Water 80/60 ºC	Heating capacity	(kW)	12,9	14,9	23,0	23,0	31,6	33,6	38,6	40,9	43,7
	Water flow	(m^3/h)	0,6	0,7	1,0	1,0	1,4	1,5	1,7	1,8	1,9
	Water pressure drop	(m.c.a.)	0,1	0,2	0,5	0,5	0,5	0,5	0,7	0,8	0,9
Water 90/70 ºC	Heating capacity	(kW)	17,9	20,8	31,5	31,5	43,5	46,5	53,1	56,3	60,1
	Water flow	(m^3/h)	0,8	0,9	1,4	1,4	1,9	2,0	2,3	2,5	2,6
	Water pressure drop	(m.w.c.)	0,2	0,3	0,8	0,8	0,9	1,0	1,2	1,4	1,6
Weight (empty)		(kg)	7,8	7,8	11,0	11,0	16,3	16,3	16,3	16,3	16,3
Diameter of hydraulic connections			3/4"		1"						

Note: with stop-drop in the indoor air coil it is not possible to assemble the hot water coil.

Position of hydraulic conections for auxiliary hot water coil

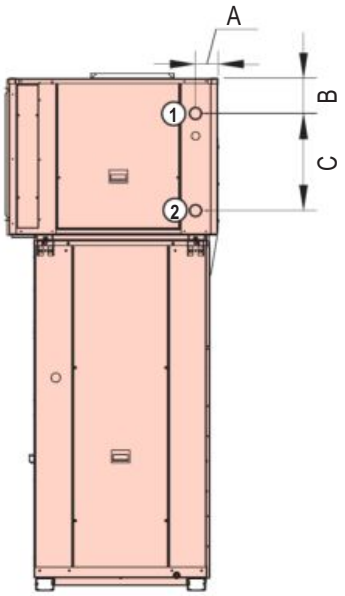

1 Inlet 2 Outlet

Dimensions (mm)	A	B	C
90 and 120	108	172	413
160 to 200	108	172	380
240	112	140	413
280 to 360	112	173	476

Stop-drop in the indoor air coil

Air flow as from which it is recommended to install a stop-drop in the indoor coil.

Indoor module ISPK		90	120	160	180	200	240	280	320	360	420	485
Air flow for stop-drop	(m^3/h)	5.246	5.246	7.283	7.283	11.110	11.110	16.566			16.949	

Note: for operating conditions with high dehumidification in the indoor coil (example. in installations close to the coast) it may be necessary to install a separator even if the flow is less than the previous one.

Note: with hot water coil it is not possible to assemble the stop-drop.

Recommended service clearance

Distances (mm)		A	B	C	D
90 to 180	Outdoor module	1.000	500	1.000	1.200
	Indoor module	500	250	500	1.000
	Compact version	1000	500	1.000	1.200
200 to 485	Outdoor module	1.000	500	1.000	1.500
	Indoor module	500	1.000	500	1.000
	Compact version	1.000	1.000	1.000	1.500

Compact ISPK

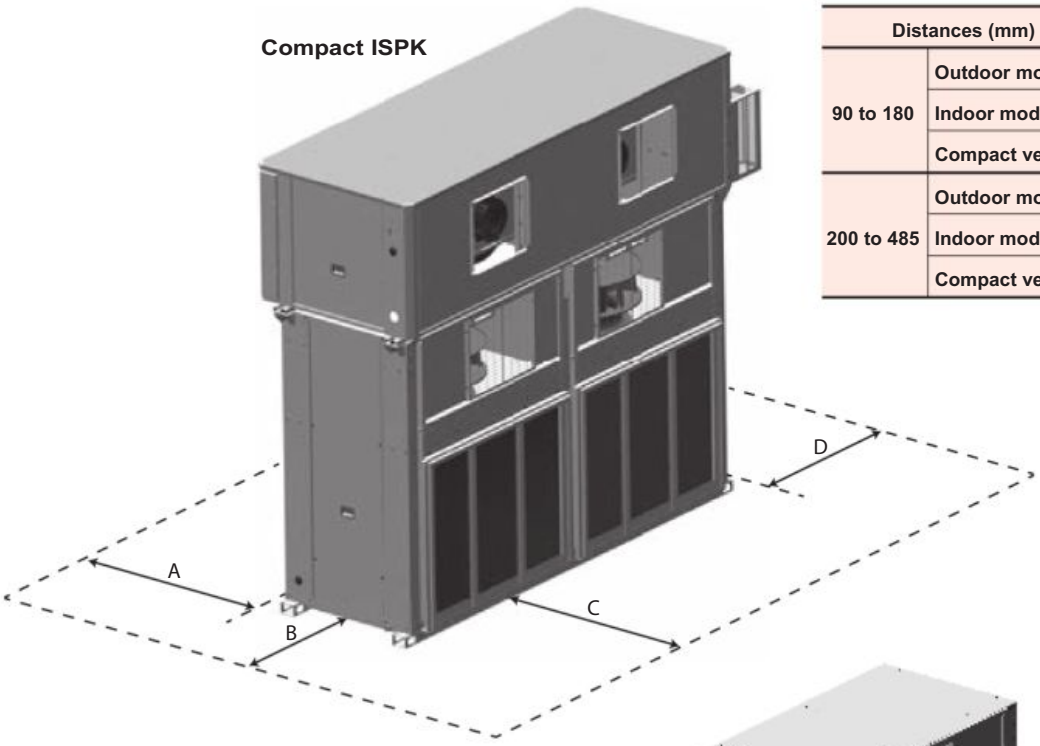

Outdoor module

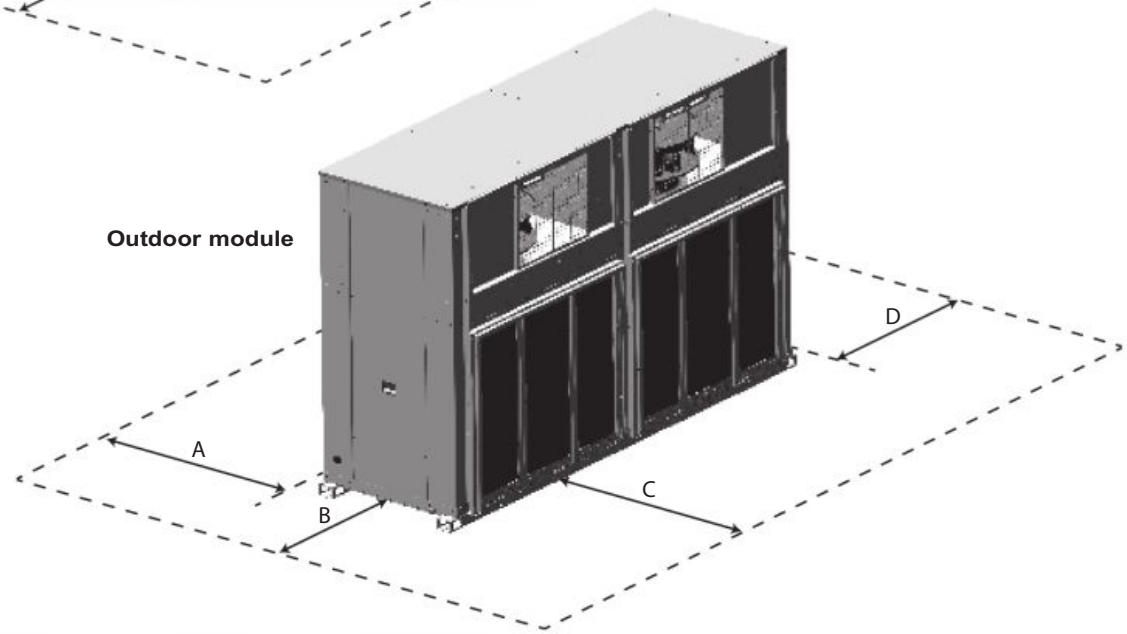

Indoor module

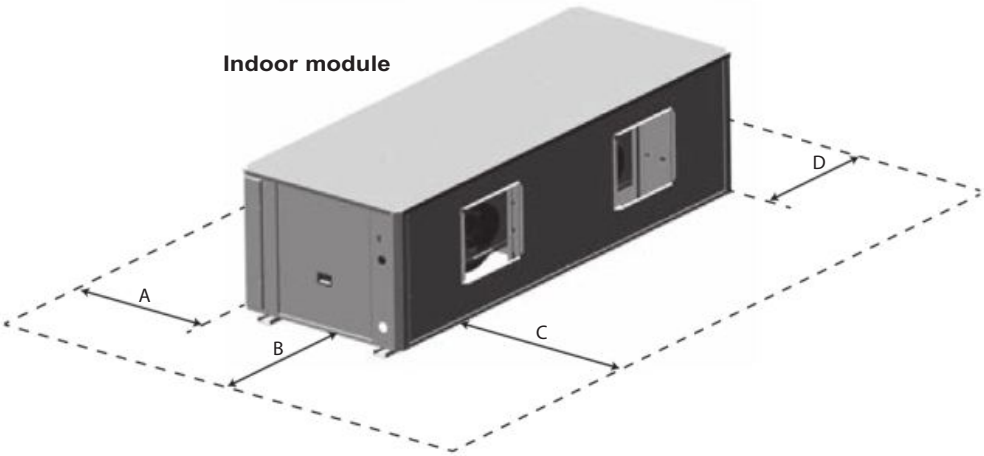

SC

Air-cooled condensing units

Scroll compressors
R-410A refrigerant
Flexible configuration
Silent operation

Cooling capacity: 20 to 135 kW
Heating capacity: 20 to 145 kW

Cooling & heating

Air filtration

Free cooling

R410A

Description

The SC range are air-cooled condensing units designed for installation outdoors.
They can be connected on-site with one direct expansion exchanger (or two in case of models 200 to 360).
Two options are available:
- **RSC range**: **non reversible** units;
- **ISC range**: **reversible** units.

They are equipped axial fan(s) with free vertical discharge, hermetic scroll-type compressor(s) and electric panel with electronic control with optimized components for the refrigerant R-410A:
A vast number of options meet numerous operating demands.
All of the units are tested and checked in the factory.

Operating limits

Temperature conditions		Cooling	Heating
Refrigerant fluid (1)	Minimum	-6 °C	40 °C
	Maximum	10 ºC	52 ºC
Inlet air	Minimum	12 °C (2)	-10 °C WB
	Maximum	48 ºC	15 ºC WB

(1) For connection with a direct expansion exchanger.
(2) With operation condensation pressure control activated to -10 °C.

Range

- **1 refrigerant circuit, 1 compressor:**
  Models: 90/100/120/160/180/182.
- **2 refrigerant circuits, 2 compressors:**
  Models: 200/240/320/360/420/485/540/600.

Compliance

- Machinery Directive 2006/42/EC (MD).
- Electromagnetic Compatibility Directive 2014/30/EU (EMC).
- Low Voltage Directive 2014/35/EU (LVD).
- Pressure Equipment Directive 2014/68/EU (Category 2) (PED).
- RoHS Directive 2011/65/EU (RoHS).
- Harmonised Standard: EN 378-2:2012 (Refrigerating systems and heat pumps - Safety and environmental requirements).

Unit components

- Casing made of galvanised steel metal with polyester paint, grey graphite colour RAL 7024 and white RAL 7035. Self-supporting frame.

Air circuit

- Axial 2-speed fan(s) directly coupled to the motor (models 90 to 182 wired to high speed). Watertight motor class F, IP54 and internal thermal protection. Dynamically balanced propellers and outdoor protective grille.
- Coil(s) with copper pipes and aluminium fins. Two designs:
  - Models 90 to 320: U coil
  - Models 360 to 600: V coils
- Condensates drain pan (on models 360 to 600).

Refrigerant circuit

- Hermetic scroll-type compressor(s) with sound insulation, fitted on anti-vibration mounts. Control of phase balance and the direction of rotation.
- Crankcase heater.
- Thermostatic expansion valve(s) with external balancing (heat pump units).
- Four-way cycle reversing valve(s) (heat pump units).
- Particle separator(s), anti-acid dehydrating filter(s) and liquid tank(s).
- Cooling connections for welding.
- Maximum equivalent length of the cooling line 50 metres (for longer distances, it is necessary to use an oil separator).

Safety devices

- High- and low-pressure pressostats.
- Compressor discharge temperature control.
- Non-return valve built into the compressor.
- Main door switch.
- Thermal-magnetic protection switches for the compressor(s) and fan(s) motor power line.
- Automatic switch in the control circuit.

Electrical cabinet

- Complete and fully wired electrical panel. Insulated panel cover to prevent condensation. Protection IP55.
- Transformer for power supply without neutral included in the electrical panel.
- Main ground connection.
- Compressor(s) and fan(s) motor contacts.

Options

Outdoor environment

Temperature

- Electrical heater for protection of the components of the electric panel. This is compulsory if the outdoor temperature is below -8 °C WB. For outdoor temperatures below -16 ºC WB, a reinforced heater will be compulsory.
- Compressor with protection against low temperatures (supplementary crankcase heater). This is compulsory if the outdoor temperature is below -8 °C WB.

Corrosion

- Coil with copper pipes and copper fins.
- INERA® coil with copper pipes and fins made from an aluminium alloy, offering high performance and great resistance to corrosion.
- Coil with copper pipes and aluminium fins with polyurethane and Blygold® coating.

Humidity

- Tropicalised electrical panel.
- Tropicalised motors and fans (contact us).

Installation

- Rubber anti-vibration mounts.
- Service valves and refrigerant load for refrigerant connections (up to 7.5 metres long).
- Oil separator for refrigerant connections with maximum equivalent length of the cooling line over 50 metres.
- Air coil protection grille (models 90 to 320).
- Condensate drain pan (on models 90 to 320).

Electrical cabinet

- Electrical power supply with neutral.
- Energy meter for monitoring the power consumption of the installation (with CIATrtc control).
  - Models 90 to 182: available if the unit does not incorporate electrical heaters.
  - Models 200 to 600: available with all options.

Energy saving

Electronic EC axial fans that adjust their rotation speed to the installation requirements, thereby reducing electricity consumption, the sound level at partial charge and improving the average seasonal output of the unit.

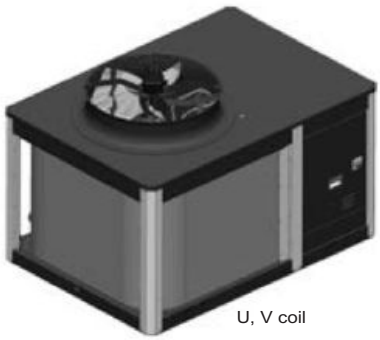

U, V coil

Coils in V

ELECTRONIC CONTROLS

■ AVANT/AVANT+ electronic control (standard)

Available in two versions:

- AVANT: models 90 to 182

- AVANT+: models 200 to 600

Note: Models 90 to 182 can incorporate the AVANT+ version as an option.

AVANT / AVANT+ control is an electronic module with microprocessor comprised of a control board and a TCO user terminal that ensures the following functions:

- Selecting the operating mode:
  - HEATING
  - COOLING
  - AUTO Auto
  - DEHUMIDIFICATION
  - FAN (no icon).

- Changing the setpoint.
- Permanent control of the operating parameters.
- Display the values measured by the sensors.
- View the codes relating to the alarms triggered.
- Compressor runtime balancing.
- Control the compressor discharge temperature using a probe.
- Control the ambient temperature using the probe incorporated into TCO terminal. This probe can be replaced by a return or ambient air probe installed in the control board.
- All-seasons operation via the condensation and evaporation pressure control.
- Control the supply air outlet temperature to improve the thermal comfort level of the installation.
  - In cooling mode, this control prevents excessive drops in the ambient temperature.
  - In heating mode, it prevents stratification of the hot air masses.

-The following features improve the energy management of the installation:

Defrosting management (in heat pump units). A smart defrosting option that reduces the energy consumption of the heat pump, by adjusting the time between defrosting operations to the actual needs of the unit.

Setpoint compensation based on the outdoor temperature. This function prevents thermal "shock" between the inside and outside of the premises whilst providing significant energy savings

Time schedule that reduces energy consumption, adjusting the air conditioning requirements of the building throughout the day.

TCO terminal has a schedule programmer with an intuitive graphic interface that allows 6 time slots to be chosen for each day of the week. A change in the setpoint temperature or the disconnection of the unit can be scheduled in these time slots (according to the building occupancy).

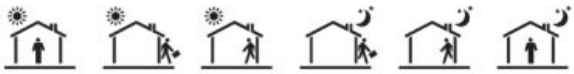

Optional functions:

If the indoor unit connected to the SC unit has these options:

- Control of the auxiliary electrical heaters.
- Proportional control of an auxiliary hot water coil.
- Humidity control.
- Fire protection.
- Control the opening of the outdoor air damper.
- Management of free cooling.
- Detection of clogged filters and air flow control.
- Connection to a centralised technical management system (BMS) for supervision (please see "Options" chapter).

pGD1 Terminal (optional):

Optionally, this control can have a terminal for pGD1 maintenance that facilitates the initial scheduling of the unit, the modification of the operating parameters and the description of the alarms produced.

■ CIATrtc electronic control (optional)

Electronic module with microprocessor comprised of a control board and a pGD1 graphic terminal installed over the unit electric panel and accessed using a polycarbonate collapsible window.

Optionally this terminal can be replaced by a TCO user terminal for installation inside of the premises. In this case the TCO terminal are not allowed to access parameters control and time schedule.

The management of the ambient temperature is controlled via a NTC ambient probe. This probe can be replaced by 1 or 2 RS485 probes.

In addition to the functions described in AVANT/ AVANT+ control, depending on the indoor unit connected to the SC unit, this control is used to manage optional components such as:

- Electronic plug-fans.
- Enthalpic or thermo-enthalpic free cooling.
- Smoke detection unit.
- Air quality probe for measuring CO_2 and/or volatile organic compounds.
- Energy meter.
- Refrigerant leak detector.

It also manages a local connection between units through a pLAN network (µPC MEDIUM Local Area Network), thus allowing communication of data and information for a maximum of 15 units. This enables the reduction of the number of pGD1 terminals, since a single shared terminal can monitor all control boards. It also allows to share the reading of some probes.

Optional for electronic controls

AVANT / AVANT+ control (standard)
- pGD1 terminal for maintenance of the unit.
- 200-m remote control kit for pGD1 terminal (pGD1 terminal + 2 TCONN bypass cards).

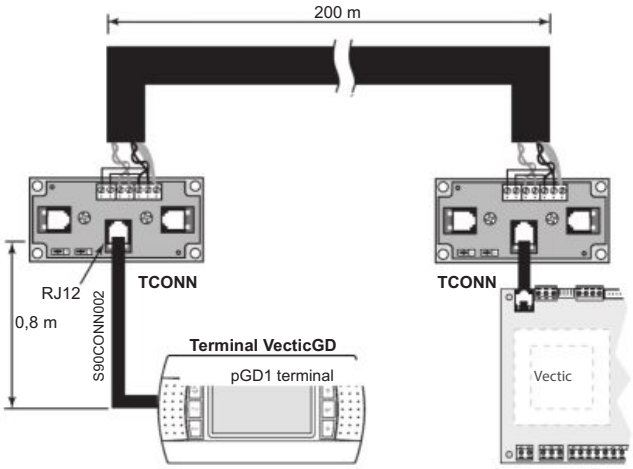

- Return or ambient air temperature sensor connected to the board which replaces the ambient air temperature sensor on the TCO thermostat. A return probe is required for the fire protection safety device.
- Mixing temperature probe: compulsory for free cooling management.

CIATrtc control (optional)
- TCO user terminal, instead of pGD1 terminal.
- Control without pGD1 terminal (for units with shared terminal).
- 200-m remote control kit for pGD1 terminal (pGD1 terminal + 2 TCONN bypass cards).
- Ambient temperature sensor with RS485 communication. By default, the control incorporates an NTC probe.

Note: An ambient probe with RS485 communication is required for installation to more than 30 m.
- Double ambient temperature sensor with RS485 communication.
- Ambient T+RH probe with RS485 (compulsory in units with enthalpic or thermo-enthalpic free cooling as an option). In this case, an outdoor air humidity sensor is also added.
- Air quality sensor to be installed in the room or in the duct to enable measurement of CO_2 and/or volatile compounds.

Communication
The **AVANT/AVANT+ and CIATrtc** controls enable connection to a centralised technical management system by using a specific BMS card for some of the following communication protocols:
- RS485 serial cards for network communication with protocols: Carel, Modbus, LonWorks®, BACnetTM MSTP, Konnex.
- Ethernet pCO Web card for network communication with protocols: Modbus TCP/IP, BACnetTM Ethernet, TCP/IP, SNMP V1-2-3, FTP and HTTP.

Supervision solutions
Different solutions of supervision are available according to the dimensions of the installation.

• **pCO Web**
It is the solution for the management and supervision of a single unit if it incorporates the Ethernet pCO Web card.

• **PlantWatchPRO3**
This solution is designed for monitoring small to medium-sized installations and can manage up to 30 units. Suitable for technical environments, it has no moving parts. It is available in two versions: panel and wall-mounted.
Includes: 7" touch screen, buzzer for notifications, 1 USB port and 1 SD card slot for downloading reports, charging peripherals for the models and service pack applications.
In this case, each unit needs one RS485 Carel / Modbus board.

• **PlantVisorPRO2**
This solution is designed to manage and monitor air-conditioning installations with up to 300 units. It performs advanced monitoring and maintenance functions and enables areas and groups to be created which simplify management of the installation. It can also incorporate energy meters for monitoring the power consumption of the installation.
PlantVisorPRO2 is available in two versions:
- **Box:** comprises the CPU unit and, as an option, a screen and a keypad.
- **Touch:** includes the CPU and the touch screen in the one device.

In this case, each unit needs one RS485 Carel / Modbus board.

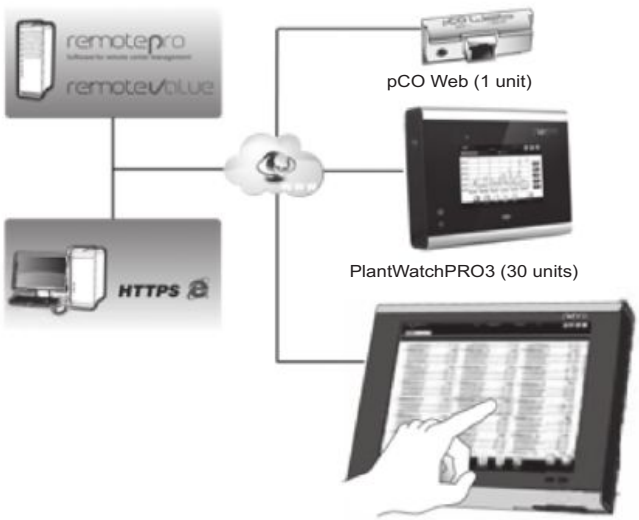

PlantVisorPRO2 (300 units)

These systems allow the installation in remote management. Through a single connection to the Internet is accessed the information system. The Web interface, which is available for the local user, allows the monitoring and the complete configuration of the installation: from the office or any other user's current location.
For remote control of multiple sites, there are dedicated tools for centralised management such as **RemotePRO** and **RemoteValue**.

TECHNICAL CHARACTERISTICS

SC		90	100	120	160	180	182	200
Cooling capacities	Cooling capacity (1) (kW)	20,8	24,4	28,5	36,2	39,2	42,5	50,4
	Power input (3) (kW)	6,3	7,7	8,3	11,8	14,2	11,8	14,7
	Energy efficiency rating (EER)	3,31	3,15	3,44	3,06	2,76	3,62	3,42
Heating capacities	Heating capacity (2) (kW)	22,6	26,6	31,0	39,2	43,1	46,6	58,1
	Power input (3) (kW)	6,4	7,1	8,4	10,1	12,4	11,6	14,7
	Coefficient of performance (COP)	3,55	3,76	3,68	3,87	3,48	4,01	3,94
Outdoor circuit axial flow fan	Nominal air flow (m3/h)	10.000		14.200			20.000	
	Available static pressure (mm.w.c)	--						
	Quantity	1						
	Diameter (mm)	630		800				
	Power (kW)	0,7 / 0,4		0,8 / 0,5			2,0 / 1,3	
	Speed (r.p.m.)	875 / 650		680 / 540			895 / 705	
Compressor	Type	Scroll						
	No. compressors/circuits/stages	1 / 1 / 1						2 / 2 / 2
	Oil type	Copeland 3MAF 32 cST, Danfoss POE 160 SZ, ICI Emkarate RL32 CF, Mobil EAL Artic 22 CC						
	Volume of oil (l)	3,0	3,3	3,3	3,3	6,2	6,2	2 x 3.3
Refrigerant connections	Circuit 1: Liquid line	1/2"	1/2"	5/8"	5/8"	5/8"	5/8"	1/2"
	Circuit 1: Gas line	7/8"	1 1/8"	1 1/8"	1 1/8"	1 1/8"	1 1/8"	1 1/8"
	Circuit 2: Liquid line	--	--	--	--	--	--	1/2"
	Circuit 2: Gas line	--	--	--	--	--	--	1 1/8"
Refrigerant	Type	R-410A						
	Global Warming Potential (GWP) (4)	2.088						
	Load up to 7,5 m (kg)	6,3	6,4	8,6	8,2	9,2	12,8	17,3
	Environment impact (tCO_2 e)	13,2	13,4	18,0	17,1	19,2	26,7	36,1
Electrical features	Mains voltage	400 V / III ph / 50 Hz (±10%)						
	Electric power supply	3 wires + GND						
Maximum absorbed current	Compressor(s) (A)	15,3	18,5	20,1	25,1	29,1	29,1	37,0
	Fan (A)	1,3	1,3	2,2	2,2	2,2	4,3	4,3
	Control (A)	0,9	0,9	0,9	0,9	0,9	0,9	1,8
	Total (A)	17,5	20,7	23,2	28,2	32,2	34,3	43,1
Dimensions	Length (mm)	1.511		1.511				1.811
	Width (mm)	1.066		1.066				1.066
	Height (mm)	1.088		1.413				1.763
Weight	(kg)	275	281	317	326	368	388	490

(1) Rated conditions: Evaporation temperature = 5 °C, outdoor operating temperature = 35 °C, overheating = 5 °C
(2) Rated conditions: Condensing temperature = 49 °C, outdoor operating temperature = 7 °C, overheating = 0 °C
(3) Total input power by compressors and fan motor assemblies under these conditions.
(4) Global Warming Potential of one kilogram of fluorinated greenhouse gas relative to one kilogram of carbon dioxide over a period of 100 years.

TECHNICAL CHARACTERISTICS

SC		240	320	360	420	485	540	600
Cooling capacities	Cooling capacity (1) (kW)	55,5	70,0	86,4	103,6	115,5	124,6	138,4
	Power input (3) (kW)	16,8	24,8	24,4	28,0	32,9	39,1	44,9
	Energy efficiency rating (EER)	3,31	2,82	3,55	3,70	3,51	3,19	3,08
Heating capacities	Heating capacity (2) (kW)	64,9	81,8	94,2	108,9	123,5	134,3	148,2
	Power input (3) (kW)	15,6	20,9	23,0	28,8	30,9	36,8	38,8
	Coefficient of performance (COP)	4,15	3,91	4,10	3,79	4,00	3,65	3,82
Outdoor circuit axial fan	Nominal air flow (m^3/h)	20.000		39.000		37.000		
	Available static pressure (mm.w.c)	--						
	Quantity	1		2				
	Diameter (mm)	800						
	Power (kW)	2,0 / 1,3						
	Speed (r.p.m.)	895 / 705						
Compressor	Type	Scroll						
	No. compressors/circuits/stages	2 / 2 / 2						
	Oil type	Copeland 3MAF 32 cST, Danfoss POE 160 SZ, ICI Emkarate RL32 CF, Mobil EAL Artic 22 CC						
	Volume of oil (l)	2 x 3.3	2 x 3.3	2 x 6.2	2 x 6.2	2 x 6.2	2 x 6.2	2 x 6.2
Refrigerant connections	Circuit 1: Liquid line	5/8"	5/8"	5/8"	5/8"	5/8"	7/8"	7/8"
	Circuit 1: Gas line	1 1/8"	1 1/8"	1 1/8"	1 1/8"	1 1/8"	1 1/8"	1 1/8"
	Circuit 2: Liquid line	5/8"	5/8"	5/8"	5/8"	5/8"	5/8"	7/8"
	Circuit 2: Gas line	1 1/8"	1 1/8"	1 1/8"	1 1/8"	1 1/8"	1 1/8"	1 1/8"
Refrigerant	Type	R-410A						
	Global Warming Potential (GWP) (4)	1.720						
	Load up to 7,5 m (kg)	17,4	22,2	22,7	31,4	31,4	33,4	33,6
	Environment impact (tCO_2 e)	36,3	46,4	47,4	65,6	65,6	69,7	70,2
Electrical features	Mains voltage	400 V / III ph / 50 Hz (±10%)						
	Electric power supply	3 wires + GND						
Maximum absorbed current	Compressor(s) (A)	40,2	50,2	58,2	68,9	79,6	91,1	102,6
	Fan (A)	4,3	4,3	8,6	8,6	8,6	8,6	8,6
	Control (A)	1,8	1,8	1,8	1,8	1,8	1,8	1,8
	Total (A)	46,3	56,3	68,6	79,3	90,0	101,5	113,0
Dimensions	Length (mm)	1.811	1.811	2.201				
	Width (mm)	1.066	1.066	2.069				
	Height (mm)	1.763	2.063	1.966				
Weight	(kg)	492	544	974	1.024	1.029	1.078	1.127

(1) Rated conditions: Evaporation temperature = 5 °C, outdoor operating temperature = 35 °C, overheating = 5 °C
(2) Rated conditions: Condensing temperature = 49 °C, outdoor operating temperature = 7 °C, overheating = 0 °C
(3) Total input power by compressors and fan motor assemblies under these conditions.
(4) Global Warming Potential of one kilogram of fluorinated greenhouse gas relative to one kilogram of carbon dioxide over a period of 100 years.

Recommendations for the refrigerant connection

■ Outdoor module at the top

Maximum equivalent length of the cooling line: 50 metres
For longer lengths, an oil separator must be used.

■ Outdoor module at the bottom

Maximum equivalent length of the cooling line: 7 metres

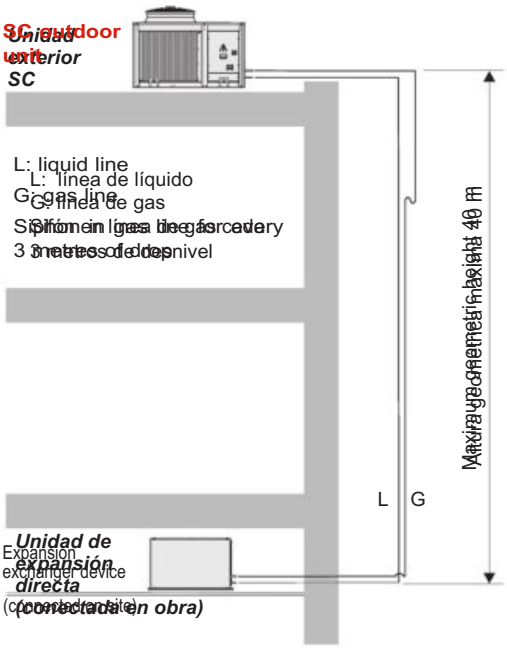

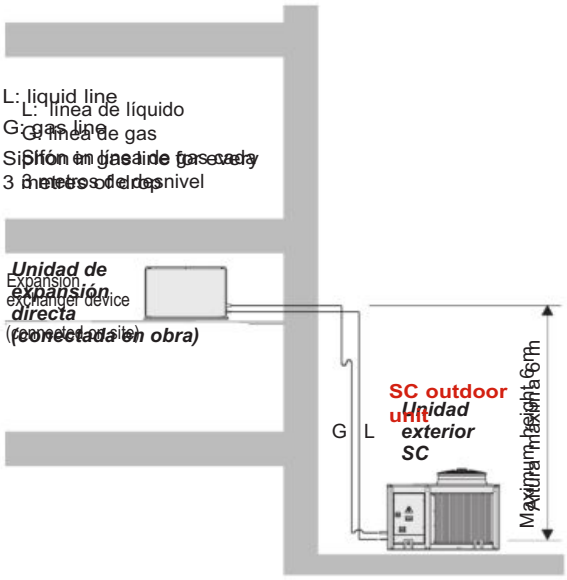

Additional load of R-410A refrigerant

Additional load per linear metre of piping for equivalent maximum lengths exceeding 7 metres:

Nominal diameter (inches)	1/4"	3/8"	1/2"	5/8"	3/4"	7/8"	1"	1 1/8"
Interior section (cm²)	0,149	0,444	0,900	1,505	2,282	3,120	4,290	5,346
Liquid line charge (g/m)	19,3	57,0	115,0	193,5	292,3	404,1	550,3	685,7
Gas line charge (g/m)	--	0,2	0,4	0,7	1,0	1,4	2,0	2,5

Options

Electronic axial fan

SC		90	100	120	160	180	182	200	240	320	360	420	485	540	600
Max. available static pressure	(mm.w.c)	15		12,5											
Number / diameter	(mm)	1 / 630		1 / 800							2 / 800				
Motor output	(kW)	1 x 0,9		1 x 2,1							2 x 2,1				
Maximum speed	(r.p.m.)	1.000		1.100											
Maximum absorbed current	(A)	2,0		3,4							6,8				

SC outdoor unit dimensions

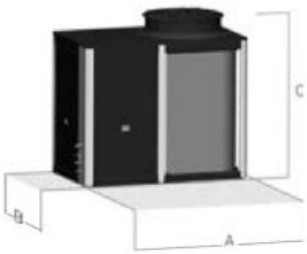

NOTE: Dimensions for indoor units (refer to the technical manual)

Outdoor unit model	Dimensions (mm)			Weight
	A	B	C	(kg)
RSC/ISC 90 U	1 511	1 066	1 088	275
RSC/ISC 100 U	1 511	1 066	1 088	281
RSC/ISC 120 U	1 511	1 066	1 413	317
RSC/ISC 160 U	1 511	1 066	1 413	326
RSC/ISC 180 U	1 511	1 066	1 413	368
RSC/ISC 182 U	1 511	1 066	1 413	388
RSC/ISC 200 U	1 811	1 066	1 763	490

Outdoor unit model	Dimensions (mm)			Weight
	A	B	C	(kg)
RSC/ISC 240 U	1 811	1 066	1 763	492
RSC/ISC 320 U	1 811	1 066	2 063	544
RSC/ISC 360 U	2 201	2 069	1 966	974
RSC/ISC 420 U	2 201	2 069	1 966	1 024
RSC/ISC 485 U	2 201	2 069	1 966	1 029
RSC/ISC 540 U	2 201	2 069	1 966	1 078
RSC/ISC 600 U	2 201	2 069	1 966	1 127

Dimension drawings

SC - 90 and 100 (mm)

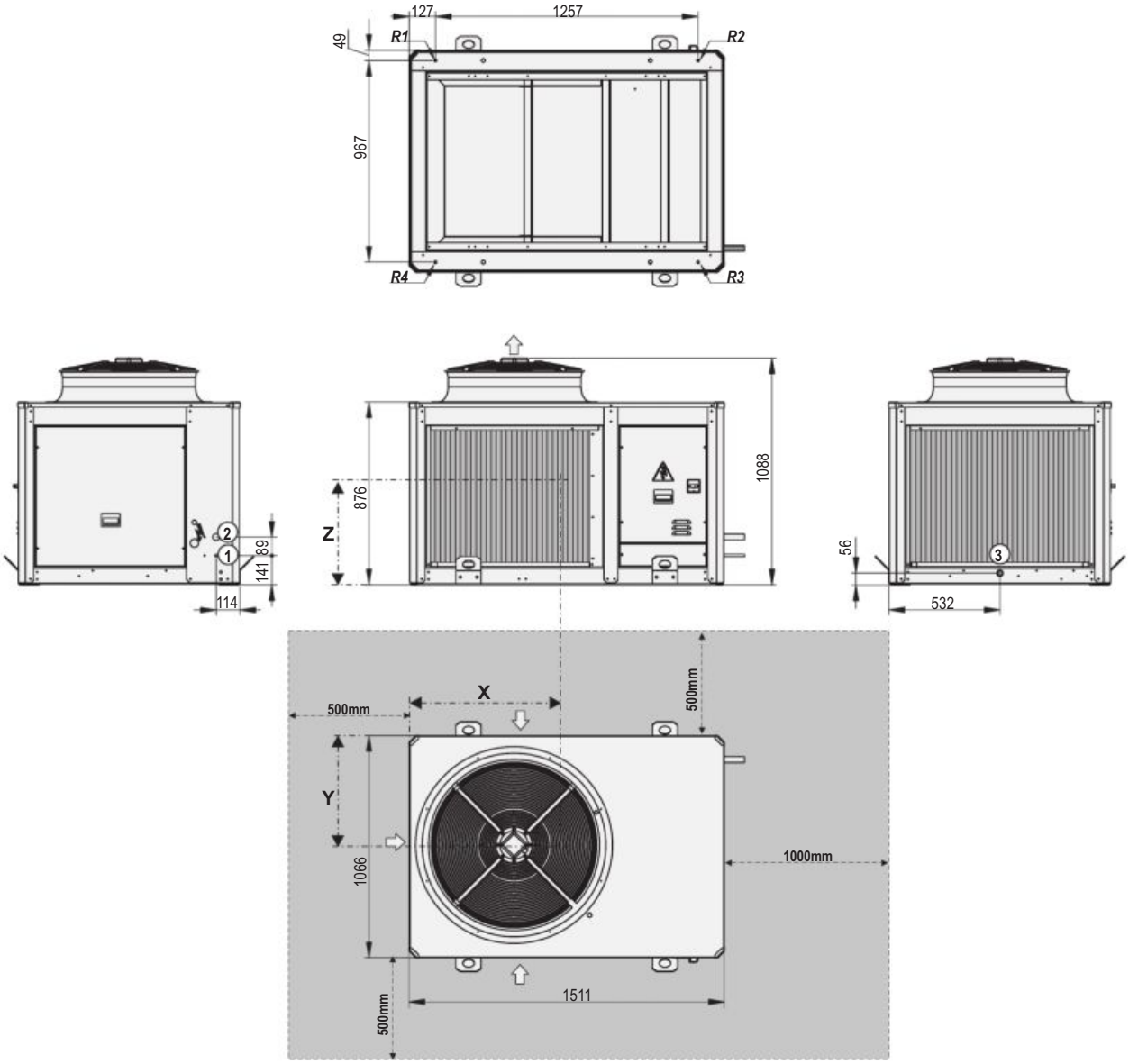

LEGEND

- Outdoor air circulation
- Electric panel
- Electric power supply
- Door switch
- (1) Liquid line
- (2) Gas line
- (3) Condensate outlet: pipe 22 mm (optional)

Antivibration anchoring: rivet nut M10

Clear space to be observed for maintenance operations and unit start-up

SC	Centre of gravity (mm)			Reactions in the supports (kg)				
	X	Y	Z	Weight	R1	R2	R3	R4
90	945	602	440	275	58	99	80	38
100	945	602	440	281	59	102	81	39

SC - 120, 160, 180 and 182 (mm)

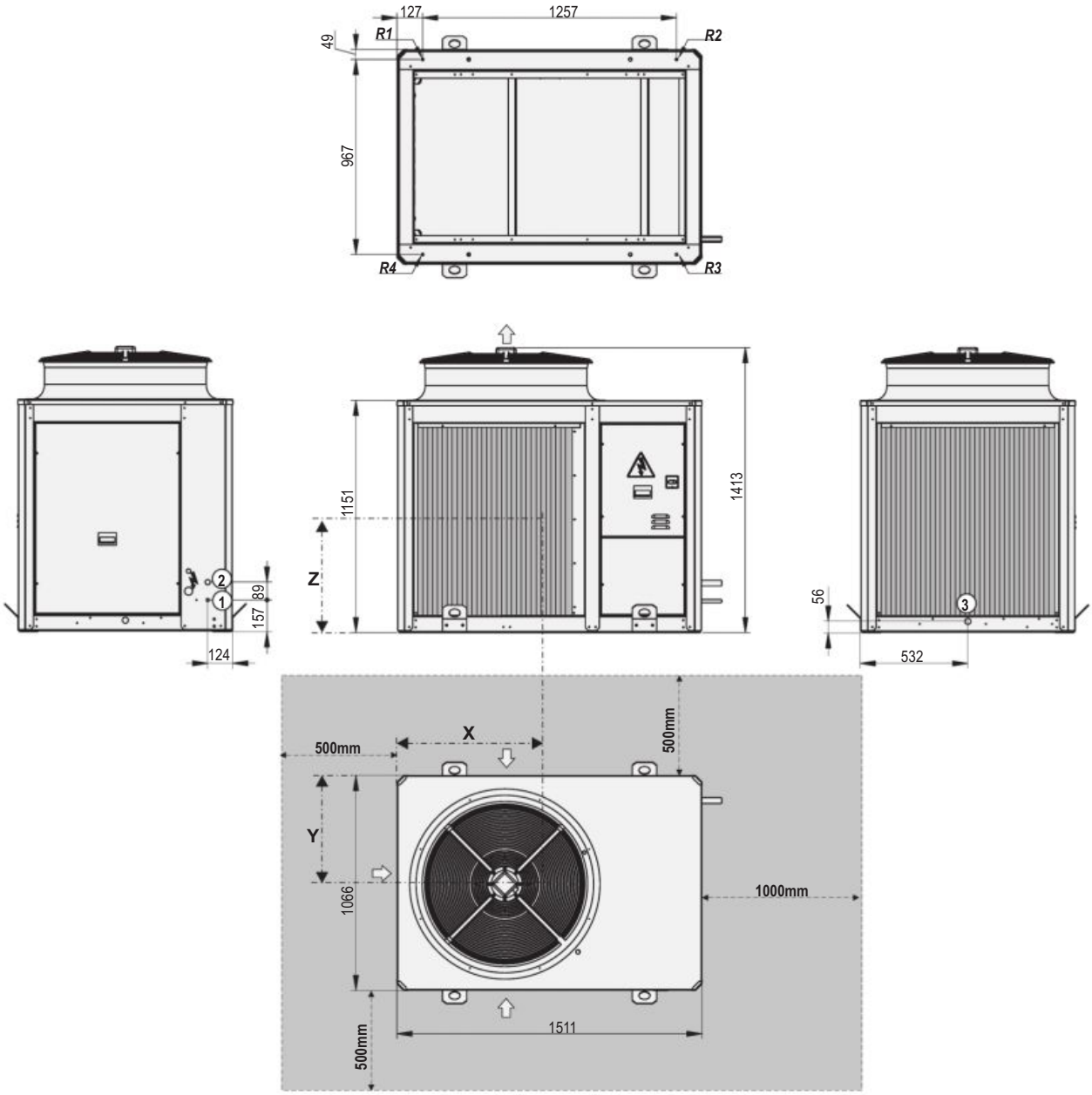

LEGEND

- Outdoor air circulation
- Electric panel
- Electric power supply
- Door switch
- ① Liquid line
- ② Gas line
- ③ Condensate outlet: pipe 22 mm (optional)

Antivibration anchoring: rivet nut M10

- Clear space to be observed for maintenance operations and unit start-up

SC	Centre of gravity (mm)			Reactions in the supports (kg)				
	X	Y	Z	Weight	R1	R2	R3	R4
120	908	595	589	317	70	109	88	50
160	913	595	593	326	72	112	91	51
180	909	584	512	368	79	124	105	60
182	909	584	512	388	84	131	110	63

SC - 200 and 240 (mm)

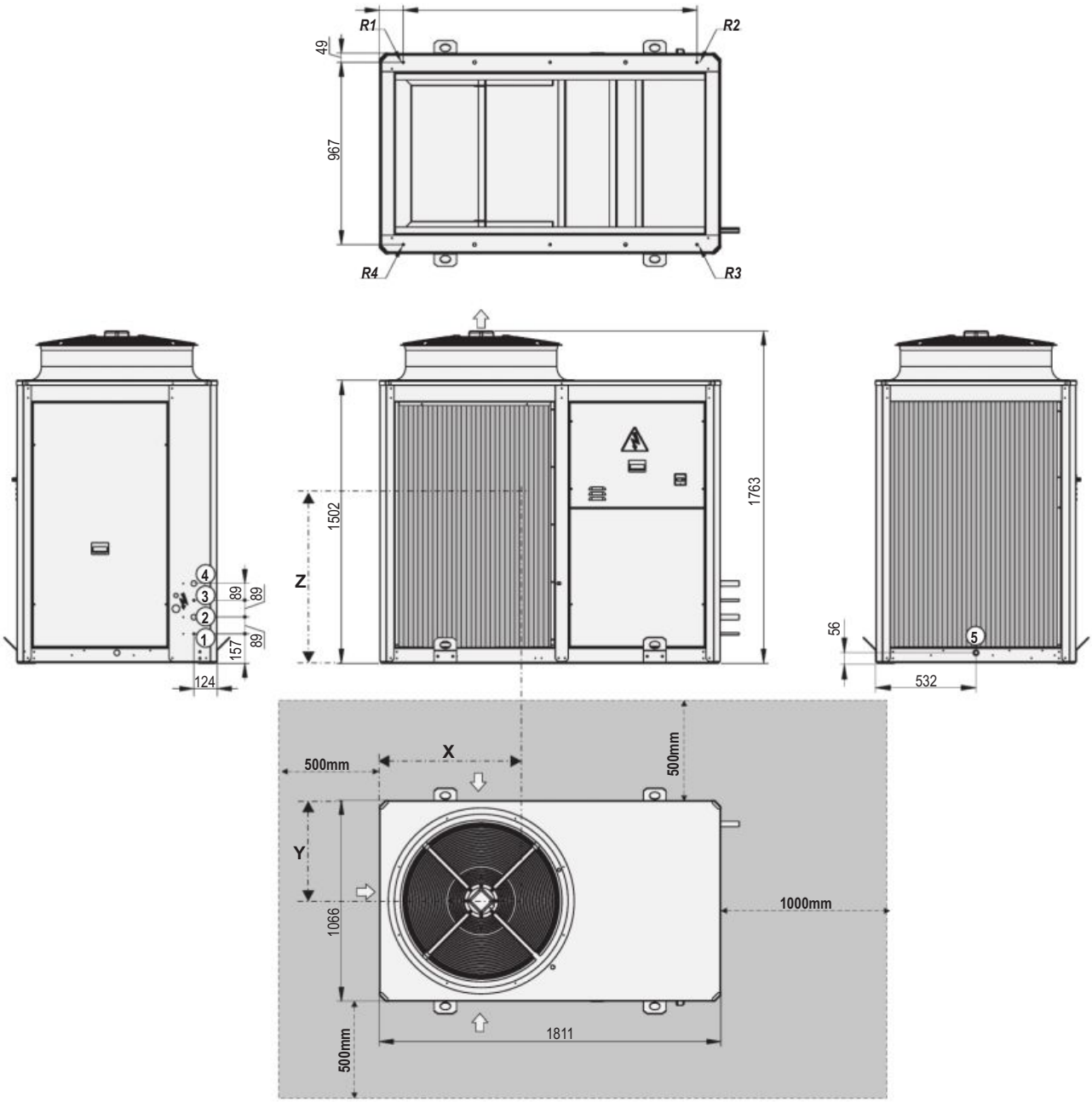

LEGEND

- Outdoor air circulation
- Electric panel
- Electric power supply
- Door switch
- ① Liquid line circuit 1
- ② Gas line circuit 1
- ③ Liquid line circuit 2
- ④ Gas line circuit 2
- ⑤ Condensate outlet: pipe 22 mm (optional)

Antivibration anchoring: rivet nut M10

- Clear space to be observed for maintenance operations and unit start-up

SC	Centre of gravity (mm)			Reactions in the supports (kg)				
	X	Y	Z	Weight	R1	R2	R3	R4
200	1.029	610	658	490	118	166	127	79
240	1.030	609	657	492	123	162	123	84

Dimension drawing

SC - 320 (mm)

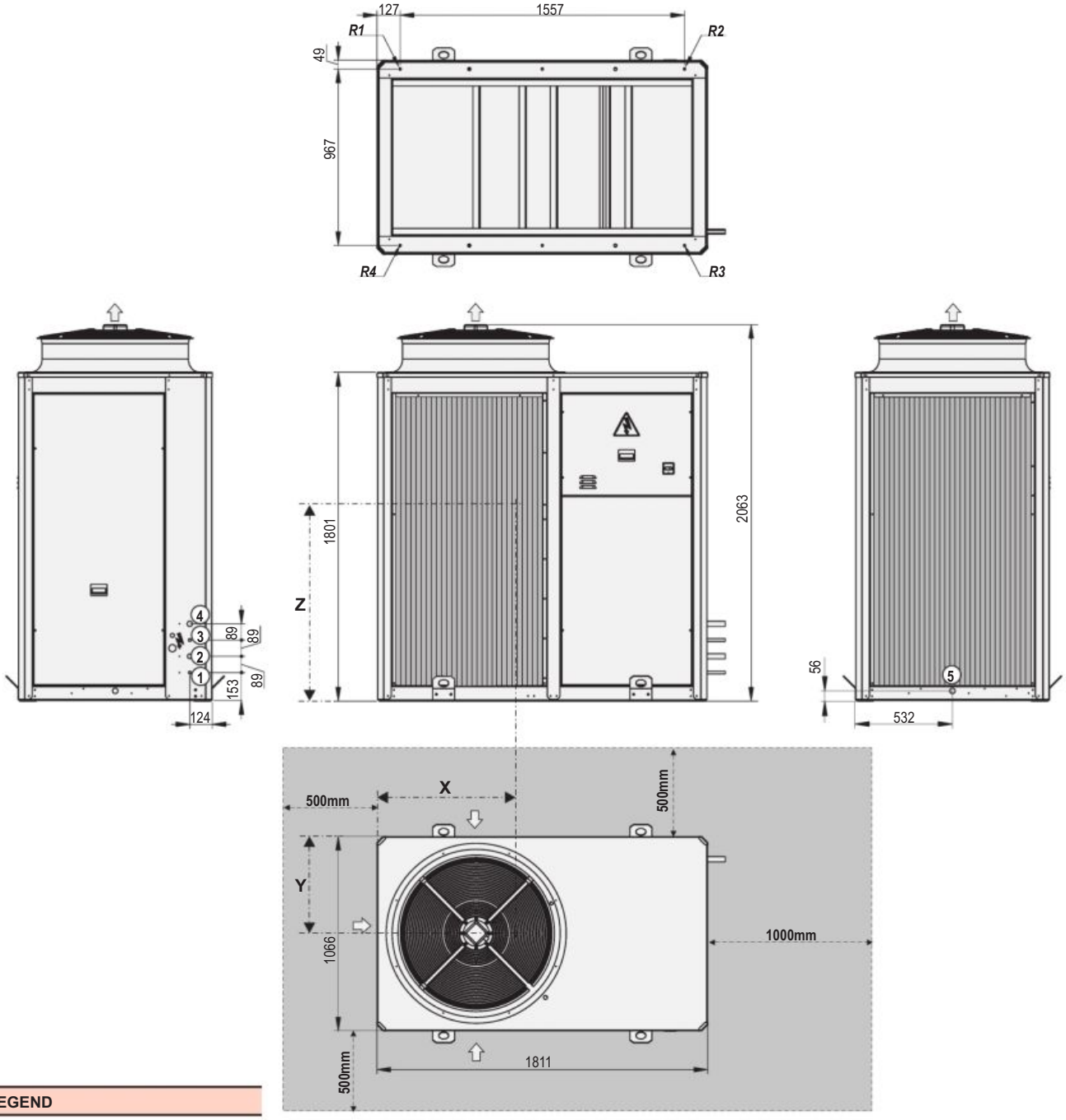

LEGEND

- Outdoor air circulation
- Electric panel
- Electric power supply
- Door switch
- (1) Liquid line circuit 1
- (2) Gas line circuit 1
- (3) Liquid line circuit 2
- (4) Gas line circuit 2
- (5) Condensate outlet: pipe 22 mm (optional)

Antivibration anchoring: rivet nut M10

Clear space to be observed for maintenance operations and unit start-up

SC	Centre of gravity (mm)			Reactions in the supports (kg)				
	X	Y	Z	Weight	R1	R2	R3	R4
320	1.019	605	777	544	136	176	136	96

SC - 360, 420, 485, 540 and 600 (mm)

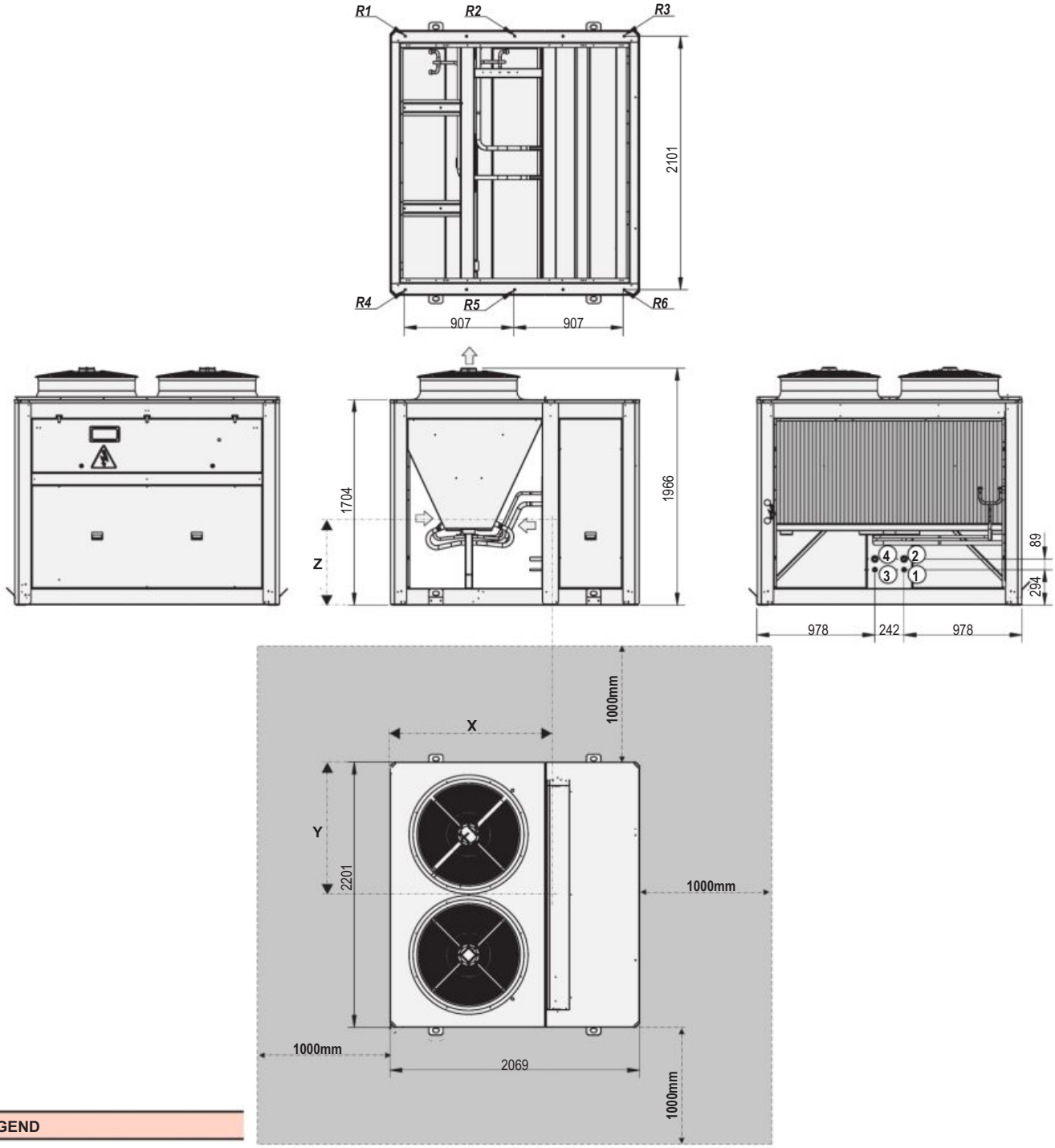

LEGEND

- Outdoor air circulation
- Electric panel
- Electric power supply
- Door switch
- ① Liquid line circuit 1
- ② Gas line circuit 1
- ③ Liquid line circuit 2
- ④ Gas line circuit 2

Antivibration anchoring: rivet nut M12

Clear space to be observed for maintenance operations and unit start-up

SC	Centre of gravity (mm)			Reactions in the supports (kg)						
	X	Y	Z	Weight	R1	R2	R3	R4	R5	R6
360	1.280	1.110	795	974	62	235	194	59	232	191
420	1.254	1.111	807	1.024	73	247	197	70	244	194
485	1.256	1.108	805	1.029	72	248	198	70	245	196
540	1.278	1.129	780	1.078	73	263	218	63	253	208
600	1.297	1.104	757	1.127	66	271	229	65	269	228

CZ

Indoor units

Configuration ***flexibility***
Silent *operation*

Cooling & heating **Air filtration** **Free cooling** **R410A**

Cooling capacity: *20 to 135 kW*
Heating capacity: *20 to 145 kW*

Description

Indoor units with horizontal construction designed for installation indoors, connected to a network of ducts.
They are equipped with centrifugal fan (EC plug-fan also available in models 90 to 360), and expansion valve.
A vast number of options meet numerous operating demands.
All of the units are tested and checked in the factory.

Range

- **1 circuit :** Models : 90 / 100 / 120 / 160 / 180 / 182.
- **2 circuits :** Models : 200 / 240 / 320 / 360 / 420 / 485 / 540 / 600.

Unit components

- Casing made of galvanised steel metal with polyester paint, white colour RAL 7035. Self-supporting frame.

Indoor air circuit

- Coil(s) with copper pipes and aluminium fins.
- Centrifugal fan(s) coupling by pulleys and belts. Electric motor(s) with tensioner, class F, IP55 and internal thermal protection. Double-intake turbines, with an impeller of front-curved blades. Greased spherical bearings, with no maintenance required.
- Reusable air filters, assembled on a frame.
- Condensate drain pan.

Cooling circuit

- Thermostatic expansion valve(s) with external equalisation (check valve in ICZ series).

Protections

- Main door switch.

Optional

Outdoor environment

Corrosion

- Coil with copper pipes and copper fins.
- INERA® coil with copper pipes and fins of an aluminium alloy, of high performance and great resistance to the corrosion.
- Coil with copper pipes and aluminium fins with polyurethane and Blygold® coating (indoor unit and/or hot water coil).
- Condensates drain pan in stainless steel.

Humidity

- Stop-drop in the indoor air coil. Recommended in cases where a high moisture content in the air is foreseen or when the air flow is high.
- Stop-drop in the outdoor air intake.

Comfort / heating options

- Hot water auxiliary coil, with three-way valve. Two options: Deux possibilités :
  - Nominal coil for heating in cooling-only units.
  - Auxiliary coil for heating in heat pump units.

If the unit includes hot water coil and free-cooling, and works with negative temperatures of outdoor air, an anti-freeze thermostat as safety system is mandatory.

- Auxiliary electrical heaters. With this option, the air flow controller is included.

Comfort / indoor air quality options

- Filtration of the supply air:
  - Gravimetric filter G4.
  - Gravimetric filter G4 + creased opacimetric filters F6 to F9.
- Filtration of the return air (with centrifugal return fan):
  - Gravimetric filter G4.
  - Gravimetric filter G4 + creased opacimetric filters F6.

Installation

- Antivibration mounts made of rubber.
- Position of supply and/or return of the indoor unit air.
- Supply and/or return fan with high available pressure.
- Electronic plug-fan(s) in air supply (upon request).
- Assemblies with **mixing box** for air renewal and free-cooling:
• 2 motorised dampers:
* MS assembly: outdoor air intake.
• 3 motorised dampers:
* MC assembly: outdoor air intake, air extraction and centrifugal return (models 90 to 180 and 420 to 600) or plug-fan (models 420 to 600 with MC0 assembly).
Note: Plug-fan in models 420 to 600 with MC0 assembly: upon request.

Toutes les combinaisons possibles de montage avec boîtes de mélange sont représentées sur la page suivante.

CZ 90 to 360 MS

CZ 90 to 180 MC

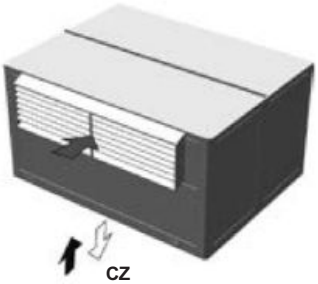

CZ
420 to 600 MS

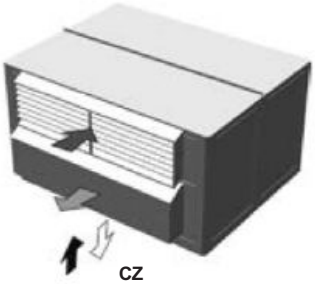

CZ
420 to 600 MC0

CZ 420 to 600 MC1

Free-cooling

On units with mixing box, the free-cooling can be managed by the electronic control. This function allows the outdoor air conditions to be taken advantage of when these are more favourable than those of the return (or ambient) air. As such, this allows the cooling capacity to be reduced under these circumstances. The percentage of air renewal will range from 0% to 100%.

There are three options for the free-cooling management:

- Thermal, with comparison of temperatures.
- Enthalpic, with comparison of enthalpies.
- Thermoenthalpic, with comparison of enthalpies and a correction for temperature.

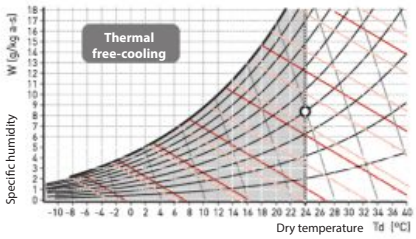

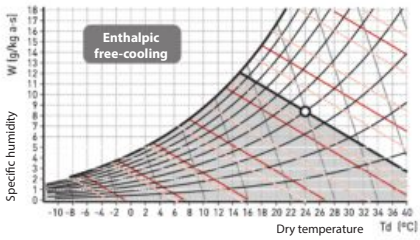

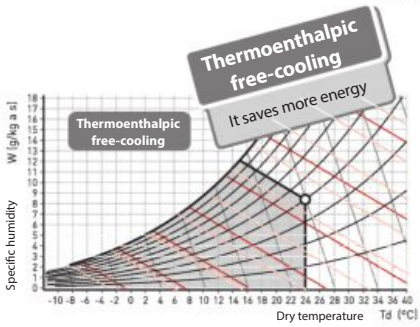

Note: With enthalpic or thermoenthalpic free-cooling change to the CIATrtc electronic control is obligatory

Safety

- Soft starter of the supply and/or return centrifugal fans which prolongs the set time mainly aimed at installations with cloth ducts. Compulsory for motors with an output of 15 kW and above.
- Differential pressostat for the detection of clogged filters.
- Differential pressostat for control of air flow.
- Smoke detecting station in accordance with the NF S 61-961 standard.
- Refrigerant leak detector (with CIATrtc control). This allows prompt identification of gas leaks, guaranteeing the safety of any people in the vicinity. Installation of the device ensures compliance with European standards F-GAS and EN378 as well as ASHRAE 15.

CZ - 90 to 360 assemblies with mixing box (plan view)

CZ - 90 al 360: montajes con caja de mezcla (vista en planta)

Circulación de aire
I = Impulsión
R = Retorno
N = Entrada aire nuevo
E = Extracción de aire

Entrada de aire
Salida de aire

Denominación **Mwxyz**

Montaje:
0 = Estándar
S = Toma aire exterior con servomotor
C = Ventilador de retorno centrífugo

Retorno:
1 = Posterior
2 = Superior
3 = Lateral derecho (*)
4 = Lateral izquierdo (*)

Impulsión:
1 = Frontal
2 = Superior

Aire nuevo:
1,6 = Posterior
2,7 = Superior
3 = Lateral izquierdo (*)
4 = Lateral derecho (*)

(*) Visto en el sentido del flujo de aire

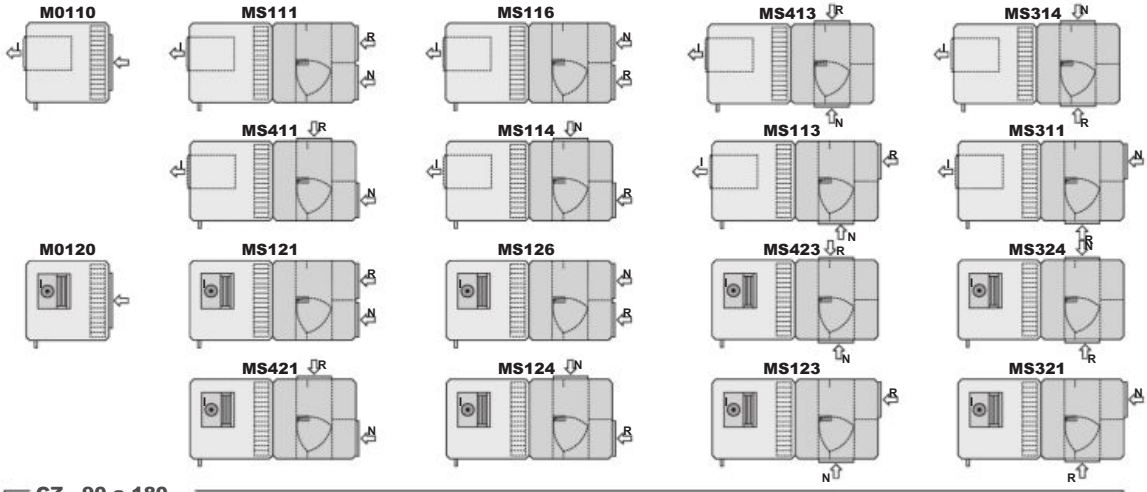

CZ - 90 a 180

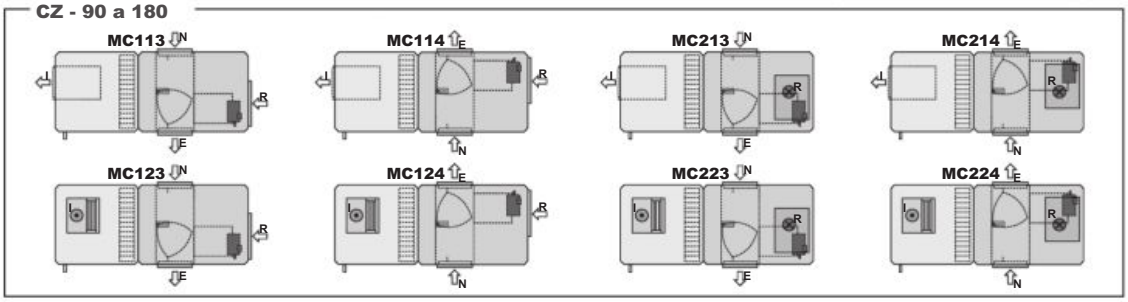

CZ - 420 to 600 - assemblies with mixing box (raised view)

CZ - 420 al 600: montajes con caja de mezcla (vista en alzado)

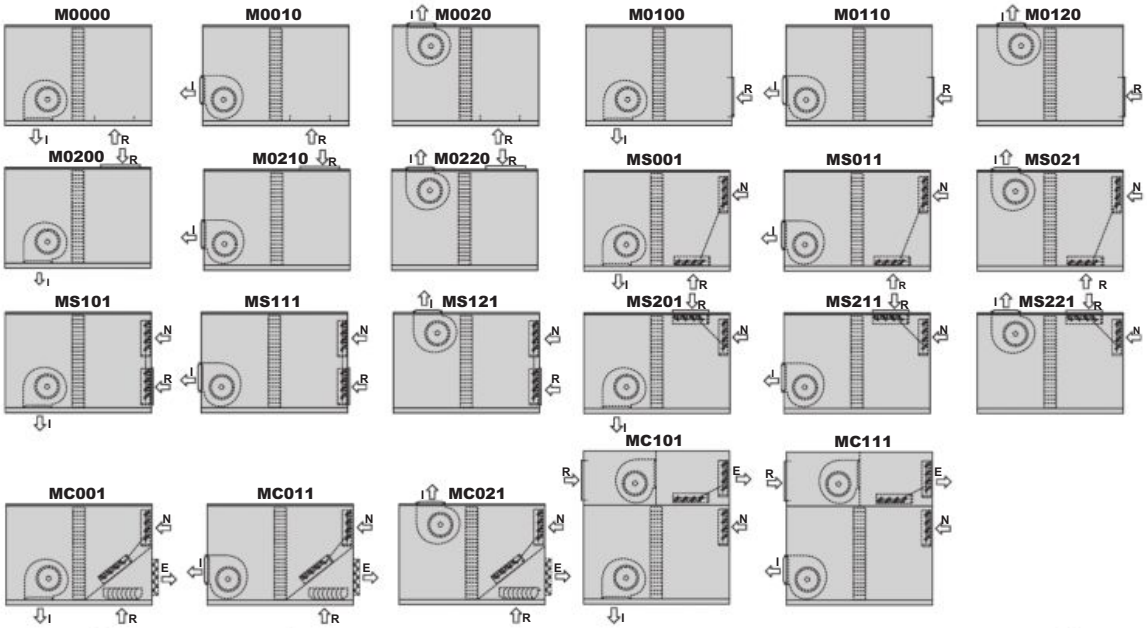

Circulación de aire
I = Impulsión
R = Retorno
N = Entrada aire nuevo
E = Extracción de aire

Denominación **Mwxyz**

Montaje:
0 = Estándar
S = Toma aire exterior con servomotor
C0 = Ventilador de retorno centrífugo inferior radial
C1 = Ventilador de retorno centrífugo en cajón superior

Retorno:
0 = Inferior
1 = Lateral
2 = Superior

Impulsión:
0 = Inferior
1 = Lateral
2 = Superior

Aire nuevo:
0 = Sin entrada
1 = Lateral

Technical characteristics

CZ		90	100	120	160	180	182	200
Centrifugal fan	Nominal air flow (m^3/h)	4.000	4.600	5.200	7.000	7.000	8.000	9.200
	Available static pressure (mm.w.c)	15	15	15	15	15	15	20
	Number / turbines	1 / 1					2 / 2	
	Motor output (kW)	1,1	1,1	1,1	1,5	1,5	2 x 0,75	2 x 1,1
	Power input (kW)	0,61	0,83	0,88	1,08	1,08	2 x 0,59	2 x 0,91
	Speed (r.p.m.)	985	1049	916	761	761	963	1126
Max. absorbed current	Fan (A)	2,7	2,7	2,7	3,6	3,6	4,2	5,4
Dimensions	Length (mm)	1.190			1.520		2.144	
	Width (mm)	950			1.028		950	
	Height (mm)	731			731		731	
Weight	(kg)	147	147	190	199	199	262	262

CZ		240	320	360	420	485	540	600
Centrifugal fan	Nominal air flow (m3/h)	10.300	14.000	15.500	18.000	18.200	20.400	24.000
	Available static pressure (mm.w.c)	20	20	20	20	20	20	20
	Number / turbines	2 / 2			1 / 3			
	Motor output (kW)	2 x 1,5	2 x 1,5	2 x 2,2	4	4	4	5,5
	Power input (kW)	2 x 0,94	2 x 1,15	2 x 1,39	2,52	2,82	2,96	3,40
	Speed (r.p.m.)	974	789	816	677	677	643	681
Max. absorbed current	Fan (A)	7,2	7,2	10,0	9,0	9,0	9,0	11,6
Dimensions	Length (mm)	2.144	2.804		2.853			
	Width (mm)	950	1.028		2.160			
	Height (mm)	731	800		1.524			
Weight	(kg)	262	365	365	920	920	963	964

Sound levels dB(A)

Sound power level on the indoor unit

Sound power level in the indoor fan supply to be taken into account for the silencer calculation:

CZ	90	100	120	160	180	182	200	240	320	360	420	485	540	600
Total dB(A)	79	82	80	80	80	82	85	82	83	85	86	87	89	92

Optional

Lower radial centrifugal return fan (MC0 assembly)

CZ		420	485	540	600
Nominal air flow	(m^3/h)	18.000	18.200	20.400	24.000
Available static pressure	(mm.w.c)	21	21	19	17
Number / diameter		4 / 500			
Motor output	(kW)	2 x (2,7 + 1,4)			
Speed	(r.p.m.)	2 x 1,700 / 2 x 1,375			
Maximum absorbed current	(A)	14,6			

Centrifugal return fan (MC1 and MC2 assembly)

CZ		90	100	120	160	180	420	485	540	600
Nominal air flow	(m³/h)	4.000	4.600	5.200	7.000	7.000	18.000	18.200	20.400	24.000
Available static pressure	(mm.w.c)	15	15	15	15	15	20	20	20	20
Number / turbines		1 / 1					1 / 2			
Motor output	(kW)	0,75	1,1	0,75	1,1	1,1	4	4	5,5	5,5
Power input	(kW)	0,48	0,65	0,58	0,72	0,72	2,73	2,85	3,57	3,86
Speed	(r.p.m.)	834	882	689	578	578	602	616	644	619
Maximum absorbed current	(A)	2,1	2,7	2,1	2,7	2,7	9,0	9,0	11,6	11,6

Nominal hot water coil

Hot water coil assembled inside the unit with a three-way valve managed by the unit control for heating in cooling-only unit.

CZ			90	100	120	160	180	182	200	240	320	360	420	485	540	600
Air pressure drop		(mm.w.c)	3,0	3,8	4,7	4,4	4,4	2,8	3,5	4,1	3,6	4,2	2,0	2,1	2,5	3,2
Water 80/60ºC and inlet air 20ºC	Heating capacity	(kW)	29,1	31,7	34,2	57,9	57,9	71,2	77,6	83,0	121,2	128,9	172,3	173,5	186,3	205,5
	Water flow	(m³/h)	1,3	1,4	1,5	2,6	2,6	3,2	3,4	3,7	5,4	5,7	7,4	7,5	8,0	8,8
	Water pressure drop	(m.w.c)	0,3	0,4	0,4	1,4	1,4	0,7	0,9	1,0	2,1	2,3	0,3	0,3	0,3	0,4
Water 90/70ºC and inlet air 20ºC	Heating capacity	(kW)	36,2	39,5	42,7	71,4	71,4	87,8	95,9	102,6	148,9	158,4	212,9	214,5	230,5	254,7
	Water flow	(m³/h)	1,6	1,8	1,9	3,2	3,2	3,9	4,3	4,6	6,6	7,0	9,2	9,2	9,9	11,0
	Water pressure drop	(m.w.c)	0,5	0,6	0,6	2,1	2,1	1,1	1,2	1,4	3,0	3,3	0,4	0,4	0,4	0,4
Weight (empty)		(kg)	10,4	10,4	10,4	16,3	16,3	23,4	23,4	34,4	34,4	34,4	62,5	62,5	62,5	62,5
Diameter of hydraulic connections			1”			1 1/4”					1 1/2”		2”			

Note: with stop-drop in the indoor air coil it is not possible to assemble the hot water coil.

Auxiliary hot water coil

Hot water coil assembled inside the unit with a three-way valve managed by the unit control for back-up during heating in heat pump units. In this case the air inlet temperature matches the air supply temperature of the indoor coil.

CZ			90	100	120	160	180	182	200	240	320	360	420	485	540	600
Air pressure drop		(mm.w.c)	2,9	3,6	4,5	4,2	4,2	2,7	3,4	4,0	6,6	7,8	1,9	2,0	2,4	3,2
Water 80/60ºC	Heating capacity	(kW)	12,9	13,7	14,9	23,0	23,0	30,2	31,6	33,6	40,9	43,7	66,1	60,8	63,6	76,9
	Water flow	(m³/h)	0,6	0,6	0,7	1,0	1,0	1,3	1,4	1,5	1,8	1,9	2,9	2,7	2,8	3,4
	Water pressure drop	(m.w.c)	0,1	0,1	0,2	0,5	0,5	0,4	0,5	0,5	0,8	0,9	0,6	0,5	0,6	0,8
Water 90/70ºC	Heating capacity	(kW)	17,9	19,2	20,8	31,5	31,5	41,2	43,5	46,5	56,3	60,1	90,1	85,0	89,8	106,1
	Water flow	(m³/h)	0,8	0,9	0,9	1,4	1,4	1,8	1,9	2,0	2,5	2,6	4,0	3,8	3,9	4,6
	Water pressure drop	(m.w.c)	0,2	0,3	0,3	0,8	0,8	0,8	0,9	1,0	1,4	1,6	1,1	1,0	1,1	1,5
Weight (empty)		(kg)	7,8	7,8	7,8	11,0	11,0	16,3	16,3	16,3	16,3	16,3	38,4	38,4	38,4	38,4
Diameter of hydraulic connections			3/4”			1”										

Note: with stop-drop in the indoor air coil it is not possible to assemble the hot water coil.

ELECTRICAL HEATERS

- Important: with this option, the air flow controller is included.
- Standard assembly in two stages (optional assembly in one stage with no over price).
- In the case of two indoor units with the one outdoor unit the assembly of the support is not possible in two stages (each indoor unit is equivalent to 1 stage).

Models 90 to 360 (assembled in the fan outlet): available capacities

CZ	Total output (kW)	6	9	12	15	18	24	30	36
	Stage power (kW)	3 + 3	3 + 6	6 + 6	6 + 9	9 + 9	12 + 12	15 + 15	18 + 18
Current (A) (400V / IIIph / 50Hz)	90 / 100 / 120	8,7	13,0	17,3	unavailable				
	160 / 180	unavailable		17,3	21,7	26,0	unavailable		
	182 / 200 / 240 / 320 / 360	unavailable			21,7	26,0	34,6	53,4	52,0

Note: in models with centrifugal return fan it is not possible to assemble electrical heaters with outputs of 30 and 36 kW..

Frame for assembly of the auxiliary heater in the supply fan outlet:

CZ	Puissance totale (kW)	Dimensions (mm)		
		A	B	C
90 / 100 / 120 (1 supply outlet)	6 / 9 kW (1 rang)	150	482	443
	12 kW (2 rangs)	262	482	443
160 / 180 (1 supply outlet)	12 / 15 / 18 kW (1 rang)	189	1.142	443
182 / 200 / 240 (2 supply outlets)	15 / 18 kW (1 rang)	189	1.142	443
	24 / 30 / 36 kW (2 rangs)	297	1.142	443
320 / 360 (2 supply outlets)	15 / 18 / 24 / 30 / 36 kW (1 rang)	189	1.142	443

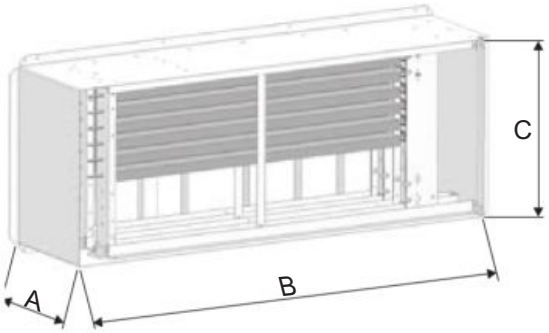

This frame is designed with side access for maintenance purposes.
In models 90 to 120 each of the rows of electrical heaters has an output of 1 kW. As from model 160, the output of each row will be 2 or 3 kW according to the total output.

In models with two supply fan outlets (two frames), as well as in the case of 1 supply outlet with 2 rails, the electrical heaters are distributed as symmetrically as possible between both frames.

Models 420 to 600 (assembled inside the unit): available capacities

CZ	Total output (kW)	36	45	54	72
	Stage power (kW)	18 + 18	18 + 27	27 + 27	36 + 36
Current (A) (400V / IIIph / 50Hz)	420 / 485	52,0	65,0	78,0	non disponible
	540 / 600	unavailable	65,0	78,0	104,0

Stop-drop in the indoor air coil

Débit d'air à partir duquel il est recommandé d'installer un séparateur de gouttes après la batterie intérieure.

CZ		90	100	120	160	180	182	200	240	320	630	420	485	540	600
Air flow	(m^3/h)	5.246			7.283		11.110			16.566		30.089			

Note: for operating conditions with high dehumidification in the indoor coil (e.g. in installations close to the coast) it may be necessary to install a separator even if the flow is less than the previous one.

Note: with hot water coil (nominal or auxiliary) it is not possible to assemble the stop-drop.

NEPTUS XP

Compact water-air units

Easy wall installation for its vertical orientation

Personalised control in offices and shopping centres

Discreet solution in centralised units with closed water loop

Applicable in geothermal installations

Plug-fan with EC-HEE motor (optional)

Cooling capacity: 25 to 92 kW
Heating capacity: 28 to 110 kW

Cooling only

Cooling and heating

Free cooling

Air filtration

Motor

Description

Refrigeration units and heat pumps from the **NEPTUS RXP-IXP** series are compact water/air units.

They are equipped with centrifugal fans, plate heat exchangers, hermetic scroll compressors and an electronic control with a microprocessor, all components optimised for the R410A refrigerant.

These units are designed for air conditioning. They can be quickly installed and function reliably. A wide range of optional modifications means that they can meet a variety of different operational requirements. Their performance is maintained regardless of the outdoor conditions.

All the machines contain a refrigerant load. They are tested in the factory in order to check all the components are operating correctly.

Series

NEPTUS RXP Series

Vertical compact water-air refrigeration unit.

NEPTUS IXP Series

Vertical compact reversible water-air heat pump unit.

Gamme

- RXP - IXP Series: 1 refrigerating circuit, 1 compressor, 5 models: 90 / 100 / 120 / 160 / 182.
- RXP - IXP Series: 1 refrigerating circuit, 2 compressors, 4 models: 200 / 240 / 320 / 360.

Limites de fonctionnement

Conditions		Refrigeration	Heating
Air inlet	Minimum	14 ºC BH	10 ºC
	Maximum	22 ºC BH	27 ºC
Water	Minimum	30 ºC (1) (3)	5 ºC (2) (5)
	Maximum	55 ºC (1)	20 ºC (2) (4)

(1) Water outlet temperature.

(2) Water inlet temperature.

(3) Units with condensation pressure control (optional) operate at temperatures of up to 5ºC.

(4) Units with evaporation pressure control (optional) operate at temperatures of up to 35ºC.

(5) If there is a risk that the plate heat exchangers may freeze, a glycol/water mix should be used.

Water loop

The principle of the installation consists of a closed loop, where the water is circulated using a circulation pump. Via this loop, water is supplied to each shop and provide the required temperature through energy exchange.

This type of system is often found in shopping centres that house a number of shops. It is particularly well adapted to buildings that require the simultaneous heating and cooling of seperate zones.

Only units which meet requirements for heating, air conditioning or ventilation will operate and therefore consume energy.

To maintain the temperature conditions of the water loop, units for heating (boilers, air-to-water heat pumps, etc.) or for cooling (drycoolers, cooling towers, water chillers, etc.) are generally used. In this way, the temperature of the water is maintained within the established limits that allow air-to-water units to operate with high energy efficiency and to minimise the overall energy consumption of the installation.

The control of these systems adapts to create the optimum temperature conditions for the water loop. Air-to-water units that operate in cooling mode transfer the energy to the loop and those that operate in heating mode extract the energy from the loop. This means that at times the two effects compensate for each other and variations in temperature occur within the established limits, so that it is not necessary to operate the units that are responsible for maintaining the conditions of the loop. In this regard, the existing inertia of the water loop also plays an important role.

If the temperature of the loop drops to below a value between 8ºC to 10ºC, the units that heat the loop (boilers, heat pumps, etc.) will activate. If the temperature reaches above a limit value of between 20 to 30ºC, the cooling units in the loop (cooling towers, etc.) will activate.

It is also interesting to consider free cooling strategies that use drycoolers, for when the outside temperature is lower than that of the water loop when the predominant demand of the rooms is to be air-conditioned.

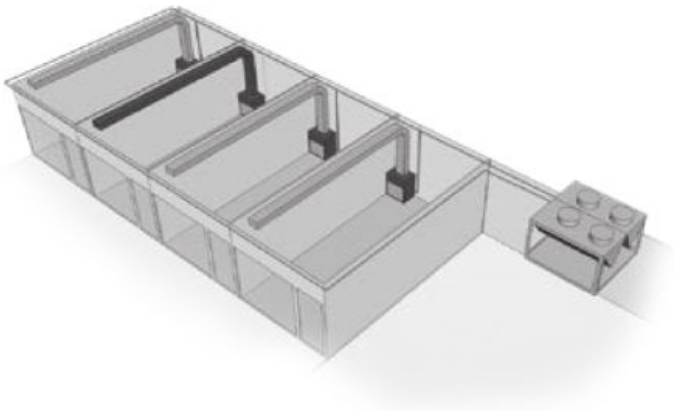

Geothermal and hydrothermal energy

Convinced that air conditioning using geothermal energy with low enthalpy is an alternative to conventional sources, CIAT places strong emphasis on this system. The Neptus XP units integrate simply into all types of installations.

This option consists of drawing on natural energy (rivers, wells, etc.) using low temperature sensors or groundwater pumps:

- Open-circuit (rivers, wells, etc.).
- Horizontal geothermal exchangers with closed circuits.
- Geothermal exchangers with vertical drilling and closed circuits.

Water-to-air units can be connected to systems that use water as a heat-transfer medium. This allows for significant savings as there is no need for additional auxiliary units (boilers, drycoolers, heat pumps, etc.). In addition, the stable, controlled temperature of the external energy source allows units to operate with high levels of seasonal efficiency.

In heating mode the energy is drawn from a thermal source. In cooling mode a cold source is used.

COOLING MODE

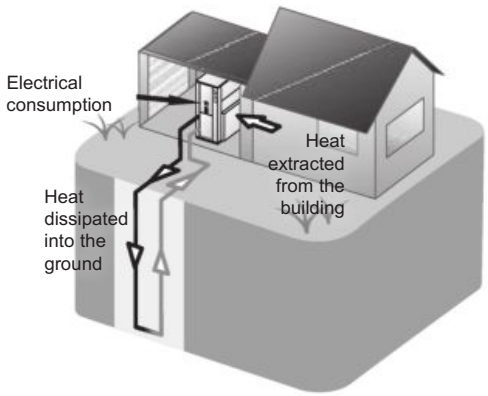

HEATING MODE

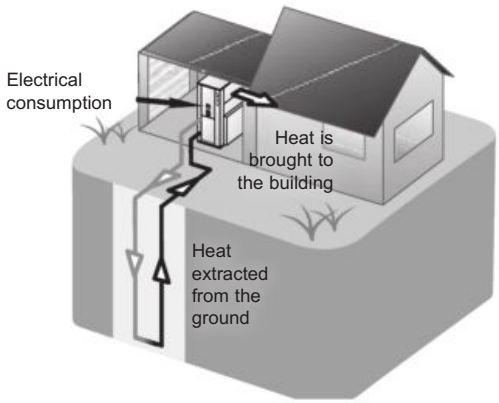

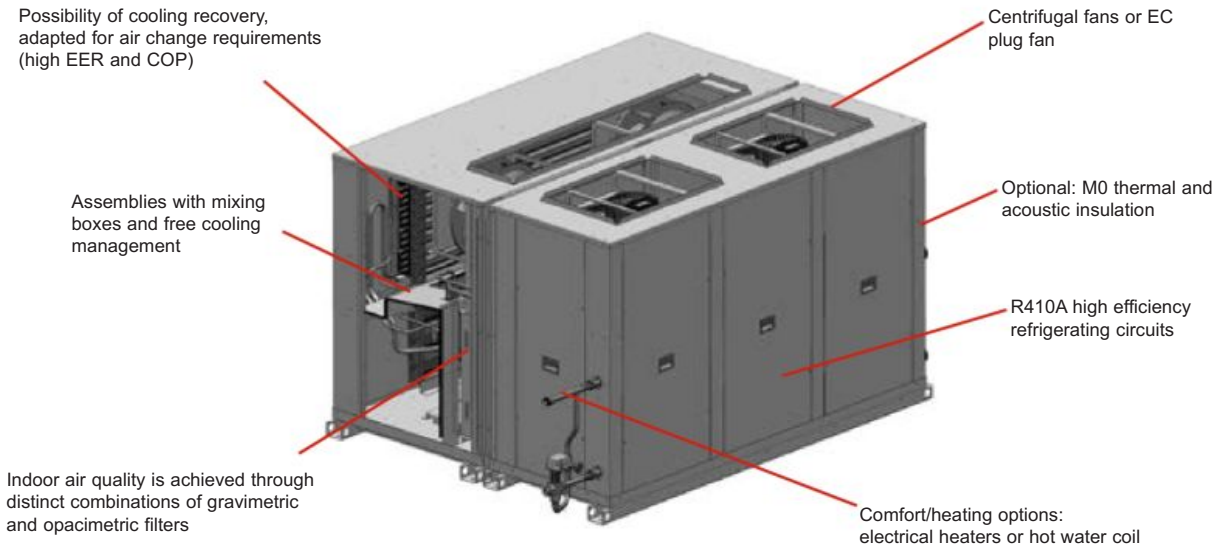

Unit components

Casing

- Galvanised sheet steel casing with polyester paint, oven dried. Free-standing frame.

Refrigerating circuit

- Hermetic scroll compressor(s), with acoustic insulation, fixed on anti-vibration mounts. Controls for the phase balances and direction of rotation.
- Crankcase heater.
- Thermostatic expansion valve with external balancing.
- Four-way reversal valve (heat pump units).
- Liquid tank.
- Anti-acid filter dryer(s).
- Liquid sight glass.

Indoor circuit

- Centrifugal fan driven by pulleys and belts. Electric motor(s) with tensioner, class F, IP55 and internal heat protection. Dual-inlet impeller(s), with a forward-curved bladed wheel. The greased round bearings require no maintenance.
- Copper tube coil and aluminium blades.
- Reusable air filters, mounted in a frame.
- Condensate drain pan.

Outdoor circuit

- Welded stainless steel plate heat exchanger.

Protections

- High and low pressure switches.
- Compressor discharge temperature control.
- Anti-return valve integrated into the compressor discharge.
- Main door switch.
- Thermal-magnetic protection on the power supply to the compressors and fan motor.
- Automatic switch for the control circuit.
- Integrated antifreeze protection in the control (heat pump units).
- Water flow controller (heat pump units)

Electrical cabinet

- Complete. fully wired electrical cabinet. The cabinet cover is isolated to prevent condensation.
- IP55 protection.
- Power supply with neutral.
- Main earth connection.
- Switches for the compressor(s) and for the fan motor(s).

Electronic controls

- AVANT/AVANT+ control as standard.
- CIATrtc electronic control (optional).

Options

Configuration/installation options

- Lateral air discharge, M01 assembly.
- Different configurations for pressure and flow rate.
- Supply plenum.

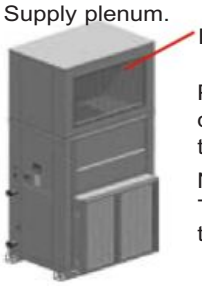

Plenum with stamped or double-deflection grille. allowing air to reach the room directly.

Note:
This casing requires the M00 assembly.

- Rubber anti-vibration mount.
- Flexible hydraulic connection kit: 500 mm or 700 mm.

Mixing and free cooling box (182 to 360 models)

A self-contained unit available in two configurations:

- **Horizontal box (MFHA module):**

- 2 motorised louvres: External air intake with louvre, combined with the return inlet.

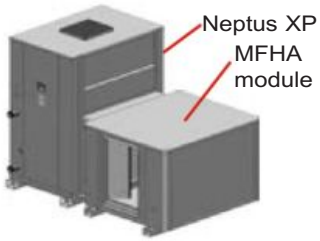

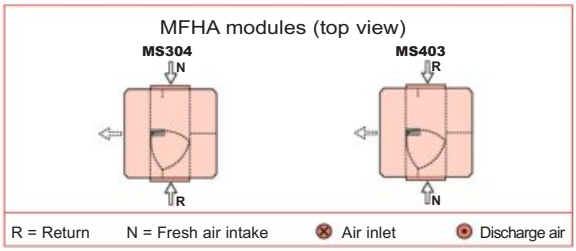

- **Vertical casing (module):**

- 2 motorised louvres: External air intake with louvre, combined with the return inlet.

Module: MS000

- 3 louvres (motorised):
  - Return air plug fan.

Module: MC000

  - Return plug fan and recovery circuit.

Module: MRC000

Note: This box requires the vertical supply of the Neptus XP unit (M00 assembly).

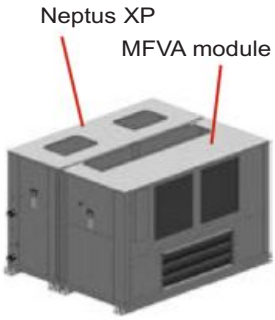

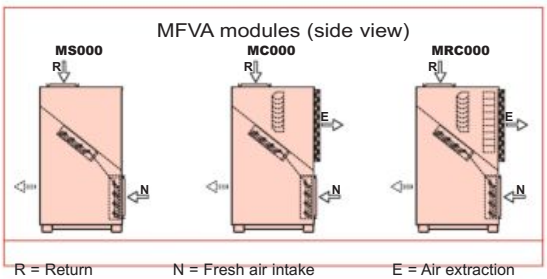

Energy saving options

Free cooling management

- See SPACE PF

EC plug fans

- Electronic plug-fan fans

EC direct coupling with variable speed and controller of debt

Active recovery (182 to 360 models)

Dedicated thermodynamic circuit for recovery, with independent regulation, adapted for air change requirements to improve the COP and the EER of the whole unit. The electronic control of the CIATrtc is needed for this option.

- EC plug fan in a vertical case with the MRC000 assembly.
- Air circuit composed of copper tube coils and aluminium blades.
- Thermostatic expansion valve with external balancing.
- Hermetic scroll compressor with acoustic insulation, fitted with anti-vibration mounts.
- Crankcase heater.
- Four-way reversal valve (heat pump units).
- Anti-acid dehumidifier filter.
- Condensate drain pan.

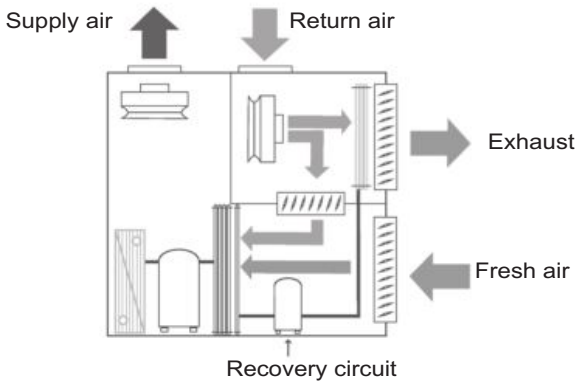

Safety options

- The soft starter for the supply air fan increases the warm-up time, and is mainly designed for installations with textile ducts.
- Differential pressure switch for detecting clogged filters.
- Differential pressure switch for controlling air flow.
- Smoke detection unit conforming to the NF S 61-961 standard (with CIATrtc control).
- Refrigerant leak detector (with CIATrtc control), please contact us.

Electrical cabinet options

- Transformer for power supplies without a neutral included in the electrical cabinet.
- Soft starter for the compressor.
- Electrical energy counter to monitor the energy consumption of the installation (with CIATrtc control), please contact us.

Options for external environments

Temperature

- Thermal and acoustic insulation 30 mm thick, with Euroclass A2-s1, d0 (MO) fire classification.

Envelope loss:

Conditions	Winter	
Indoor	20ºC	50% RH
Outdoor	-20ºC	94% RH
9mm NBR (std)	1790 W	2.0% HC
30mm mineral wool	726 W	0.7% HC

Conditions	Summer	
Indoor	27ºC	50% RH
Outdoor	35ºC	40% RH
9mm NBR (std)	615 W	1.00% TCC
30mm mineral wool	249 W	0.45% TCC

- Operates in all seasons: condensation and evaporation pressure control with a three-way proportional valve that controls the water flow rate in the plate heat exchanger.

  For waste water operation with a two-way valve: please contact us.

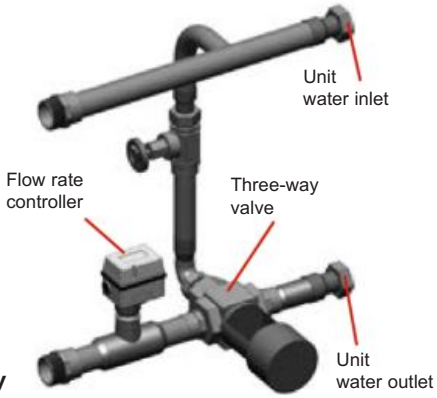

Humidity

- Tropicalised components on the electric panel with protective varnish: control board, cards and terminals.
- Tropicalised fans and motors (please contact us).

Corrosion

- Copper tube coils (internal and/or auxiliary) and aluminium blades.
- Copper tube coils (internal and/or auxiliary) and aluminium blades, with polyurethane coating or a coil completely protected by Blygold.

Comfort/heating options

- Auxiliary electrical heaters. The required flow rate controller is included with this option.

  If the unit with heaters includes an EC supply plug fan, the control of the air flow is accomplished directly through the plug fan.
- Auxiliary hot water coil with a three-way valve. With this option the unit can include an antifreeze thermostat for safety.

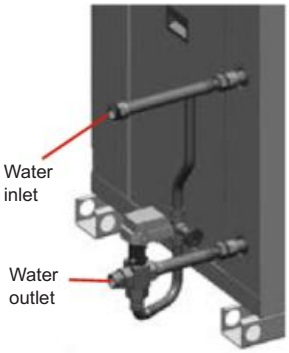

Comfort/indoor air quality options

- G4 gravimetric filter.
- G4 gravimetric filter + opacimetric folded filters F6 to F9.
- A double layer of opacimetric folded filters: F6 + F7, F6 + F8 or F7 + F9.
- An air quality sensor to be installed externally or in a duct, allows the levels of CO_2 and/or volatile organic compounds (VOC) to be measured (with CIATrtc control).

Control options

- Please contact us

Sound power and pressure level

A) The sound power level of the indoor supply fan should be taken into account when making the calculation for the silencer:

NEPTUS XP	90	100	120	160	182	200	240	320	360
dB(A)	82.0	87.2	88.1	85.0	82.7	89.5	91.1	88.4	91.1

B) The sound pressure level of the unit, with supply air and return ducts, measured at a distance of 5 metres, in free field, with a directivity of between 2 and 1.5 metres from the ground:

NEPTUS XP	90	100	120	160	182	200	240	320	360
dB(A)	54.7	56.3	58.0	57.6	59.6	58.7	60.7	60.7	64.0

Note: The sound pressure level depends on the conditions of the installation, and as a result, it is only provided for guidance.

TECHNICAL CHARACTERISTICS

NEPTUS XP		90	100	120	160	182	200	240	320	360
Refrigeration capacities	Cooling capacity (1) (kW)	24.55	28.76	31.68	40.88	46.61	57.81	63.66	84.01	92.41
	Power input (3) (kW)	5.90	7.24	7.91	10.10	10.70	14.35	15.70	19.88	23.25
	Energy efficiency rating (EER)	4.16	3.97	4.00	4.05	4.36	4.03	4.05	4.23	3.98
Heating capacities	Heating capacity (2) (kW)	27.94	33.02	38.18	47.12	53.90	66.69	74.37	98.02	109.79
	Power input (3) (kW)	7.00	8.34	9.79	11.99	13.23	15.49	17.72	23.33	27.25
	COP efficiency	3.99	3.96	3.90	3.93	4.08	4.31	4.20	4.20	4.03
Outdoor circuit	Nominal water flow rate (m^3/h)	5.2	6.1	6.7	8.7	9.8	12.2	13.5	17.7	19.6
	Pressure drop (m w.c.)	5.3	7.4	5.8	9.6	6.1	9.6	6.9	4.0	4.9
	Hydraulic connection type	Gas thread								
	Connection diameter	1 1/2" M			2" M					
Indoor circuit centrifugal fan	Nominal air flow (m^3/h)	4 700	6 100	6 400	7 300	8 400	11 800	12 800	15 000	17 000
	Available static pressure (mm w.c.)	8.0								
	Number / impellers	1 / 1				2 / 2				
	Motor output (kW)	1.1	2.2	3.0	2.2	2 x 1.1	2 x 2.2	2 x 3.0	2 x 2.2	2 x 3.0
	Power input (kW)	0.85	1.17	1.32	1.52	1.25	2.10	2.54	3.10	4.25
	Speed (tr/mm)	1 048	1 225	1 273	942	952	1 183	1 252	925	1 003
Compressor	Type	Scroll								
	No. / No. of stages / No. of circuits	1 / 1 / 1					2 / 2 / 1			
	Oil type	Copeland 3MAF 32 cST. Danfoss POE 160 SZ. ICI Emkarate RL32 CF. Mobil EAL Artic 22 CC								
	Oil level (l)	3.0	3.3	3.3	3.3	6.2	2 x 3.3	2 x 3.3	2 x 3.3	2 x 6.2
Refrigerant	Type	R410A								
	Global Warming Potential (GWP) (4)	2 088								
	Load (kg)	4.6	4.7	5.0	6.4	7.5	8.9	9.5	12.1	12.3
Electrical characteristics	Network voltage	400 V / III ph / 50 Hz (±10%)								
	Supply	3 wires + earth + neutral								
Maximum input current	Compressor (A)	15.3	18.5	20.1	25.1	29.1	37.0	40.2	50.2	58.2
	Fan (A)	2.7	5.0	6.9	5.0	5.4	10.0	13.8	10.0	13 8
	Control (A)	0.9	0.9	0.9	0.9	0.9	1.8	1.8	1.8	1.8
	Total (A)	18.9	24.4	27.9	31.0	35.4	48.8	55.8	62.0	73.8
Dimensions	Length (mm)	1 141			1 471	2 091			2 731	
	Width (mm) (5)	859			859	859			859	
	Height (mm)	1 284			1 422	1 284			1 422	
Weight	(kg)	334	337	345	453	568	604	625	719	730

(1) The calculated cooling capacity conforms to the UNE-EN-14511 standard, for input/output water temperature conditions of 30/35ºC and indoor air temperature conditions of 27ºC (19ºC WB).
(2) The calculated heating capacity conforms to the UNE-EN-14511 standard, for input water temperature conditions of 15ºC and indoor air temperature conditions of 20ºC.
(3) The total input power of the compressor(s) and fan motor assembly(ies) under rated conditions is calculated conforming to the UNE-EN-14511 standard.
(4) The potential effect of one kilogram of fluorinated gas on global warming compared to one kilogram of carbon dioxide over a period of 100 years.
(5) On request, the filter frame (146 mm) can be provided separately, for use with the XP unit (713 mm) in the field.

Dimensions

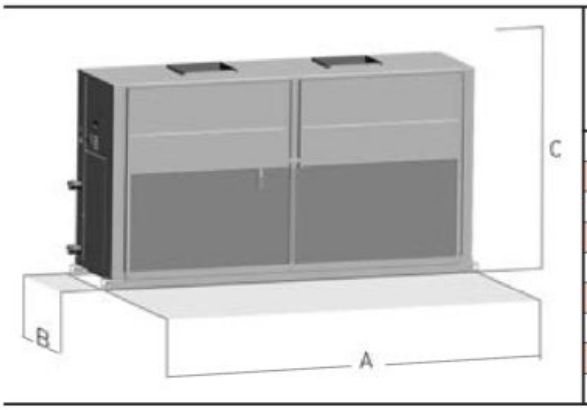

Models	Dimensions (mm) A	B	C	Weight (kg)
RXP / IXP 90 U	1 141	859	1 284	334
RXP / IXP 100 U	1 141	859	1 284	337
RXP / IXP 120 U	1 141	859	1 284	345
RXP / IXP 160 U	1 471	859	1 422	453
RXP / IXP 182 U	2 091	859	1 284	568
RXP / IXP 200 U	2 091	859	1 284	604
RXP / IXP 240 U	2 091	859	1 284	625
RXP / IXP 320 U	2 731	859	1 422	719
RXP / IXP 360 U	2 731	859	1 422	730

Available configurations

Main units

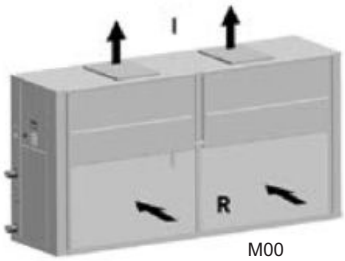

M00

M01

Air input/output

I = Supply air
R = Return

Options for the indoor circuit

■ Auxiliary heater

Auxiliary electric heaters on 2 levels, for mounting and connection inside the unit, with one or two rows.**Important:** If the unit includes a centrifugal supply air fan (standard), the required flow rate controller is also supplied.

NEPTUS XP	Total power (kW)	6	9	12	15	18	24	30
	Stage capacity (kW)	3 + 3	3 + 6	6 + 6	6 + 9	9 + 9	12 + 12	15 + 15
Current (A) (400V / IIIph / 50Hz)	90 / 100 / 120	8.7	13.0	17.3	Unavailable			
	160	Unavailable		17.3	21.7	26.0	Unavailable	
	182 / 200 / 240 / 320 / 360	Unavailable			21.7	26.0	34.6	43.3
Coil weight (kg)		7.7	9.3	10.7	12.6	14.6	21.4	25.2

■ Auxiliary hot water coil

The auxiliary hot water coil is mounted inside the unit, with three-way valves controlled by the controls of the auxiliary heating unit on heat pump units.

In this case, the supply air temperature of the coil is the same as the air output temperature of the indoor thermodynamic coil (outlet conditions of the coil for an air intake of 20ºC, with a water inlet temperature in the outdoor circuit of 15ºC).

NEPTUS XP			90	100	120	160	182	200	240	320	360
Air pressure drop		(mm.w.c.)	3.7	5.7	6.2	4.5	2.8	4.9	5.6	3.9	4.7
Water 80/60ºC	Heating capacity	(kW)	14.0	17.4	16.7	22.0	28.9	38.8	40.0	46.1	50.1
	Water flow rate	(m^3/h)	0.6	0.8	0.7	1.0	1.3	1.7	1.8	2.0	2.2
	Water pressure drop	(m.w.c.)	0.4	0.5	0.5	0.8	1.0	1.5	1.6	1.0	1.2
Water 90/70ºC	Heating capacity	(kW)	19.6	23.9	23.5	30.9	40.4	53.1	55.0	65.2	70.8
	Water flow rate	(m^3/h)	0.9	1.1	1.0	1.4	1.8	2.4	2.4	2.9	3.1
	Water pressure drop	(mm.w.c.)	0.7	0.8	0.8	1.5	1.6	2.5	2.7	1.5	1.8
Coil weight (empty)		(kg)	7.8	7.8	7.8	11	16.3	16.3	16.3	34.4	34.4
Hydraulic connection diameters			3/4”			1”					

Supply air EC plug fan with variable speed

NEPTUS XP		90	100	120	160	182	200	240	320	360
Nominal air flow	(m^3/h)	4 700	6 100	6 400	7 300	8 400	11 800	12 800	15 000	17 000
Available nominal static pressure	(mm.w.c.)	8								
Nominal power input	(kW)	0.67	0.88	1.00	1.28	1.04	1.94	2.30	2.52	3.34
Maximum available static pressure	(mm.w.c.)	77.3	64.5	59.7	56.1	84.0	68.3	61.7	56.4	39.1
Number		1				2				
Diameter	(mm)	500								
Speed	(r.p.m.)	1 700								
Motor output	(kW)	1 x 2.68				2 x 2.68				
Maximum input current	(A)	4.2				8.4				

Return air EC plug fan with variable speed (MC assembly)

NEPTUS XP		182	200	240	320	360
Nominal air flow	(m^3/h)	8 400	11 800	12 800	15 000	17 000
Available nominal static pressure	(mm.w.c.)	8				
Nominal power input	(kW)	0.70	1.52	1.86	1.56	2.08
Maximum available static pressure	(mm.w.c.)	124.3	103.3	97.6	74.8	60.8
Number		2				
Diameter	(mm)	400			500	
Speed	(r.p.m.)	2 500			1 700	
Motor output	(kW)	2 x 3.0			2 x 2.68	
Maximum input current	(A)	9.2			8.4	
Dimensions of the module Length/ Width/ Height	(mm)	2 091 / 883 / 1 311			2 731 / 883 / 1 448	
Module weight (kg)	(kg)	292			397	

Cooling recovery circuit (MRC assembly)

Important: the CIATrtc electronic control is required for this option.

NEPTUS XP			182	200	240	320	360
Return air plug fan	Nominal flow rate	(m^3/h)	8 400	11 800	12 800	15 000	17 000
	Nominal power input	(kW)	0.96	2.00	2.42	2.00	2.60
	Maximum available static pressure	(mm.w.c.)	115.1	88.6	81.1	66.6	51.2
Recovery scroll processor characteristics	No. compressors/ circuits		1 / 1				
	Oil type		Copeland 3MAF 32 cST. Danfoss POE 160 SZ. ICI Emkarate RL32 CF. Mobil EAL Artic 22 CC				
	Oil level	(L)	1.6	1.6	1.6	3.0	3.0
	Maximum input current	(A)	9.0	9.0	13.0	15.3	15.3
R410A refrigerant load		(kg)	2.5	2.5	2.6	4.3	4.3
Dimensions of the module	Length/ Width/ Height	(mm)	2 091 / 883 / 1 311			2 731 / 883 / 1 448	
Module weight (kg)		(kg)	367			502	

BOSS SUPERVISION

System of connectivity, monitoring and remote management

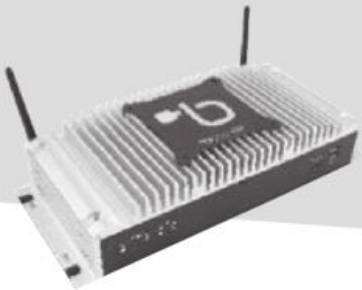

Complete supervision

for large installations

- *Remote control.*
- *Management of up to 300 units (with a total of 3500 variables).*
- *Management of alarms.*
- *Creation of diagrams and reports.*
- *Scheduling and managing of events and operating scenarios.*
- *Installation drawing with location of machines.*
- *Energy management.*
- *Analysis of risks and critical monitoring points.*
- *Notes.*
- *Hotspot Wi-Fi integrated.*

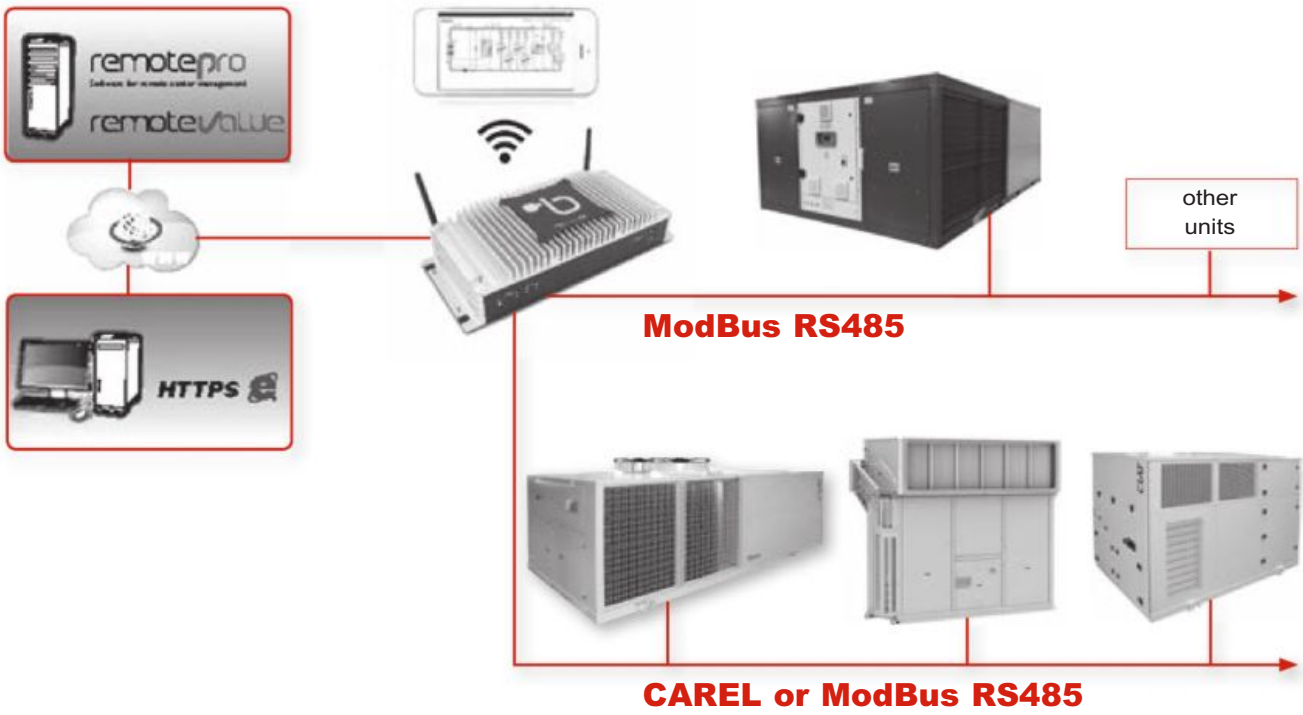

USE

CIAT BOSS SUPERVISION is a pre-installed PC-based solution for the management and supervision of large air conditioning facilities of up to 300 units (3500 variables in total).
It implements advanced monitoring and maintenance functions and enables creating areas and groups which simplify the management of the installation. It integrates an installation drawing and the list of units.
Completely browsable from mobile devices, from commissioning to daily access for system maintenance.

Built-in Wi-Fi to create a network and allow the supervisor to be accessed from the user's devices without requiring other network infrastructure.

The following controls can be managed:

- CIATrtc / AVANT / AVANT+ / CIATpool: CAREL or ModBus protocol
- Vectic: ModBus protocol only
- Other units (please consult us): ModBus protocol

Main features

■ BOSS always in your pocket

Responsive web pages offer the possibility to access all BOSS pages for both programming and everyday operations using mobile devices. The graphics automatically to the device they are displayed on (computers with different screen resolutions, tablets, smartphones), minimising the need for the user to resize the pages and scroll the contents.

■ Centralised management

BOSS permits automatic data and alarm synchronisation with RemotePRO, so as to keep the situation on all connected systems under control from just one interface. Centralised system management also increases reliability, through alarm analysis and scheduling of service. It also allows increased energy efficiency by comparing energy consumption and performance between the different sites and identifying possible cost reduction actions.

■ Remote service

Access to typical operating system functions, such as printer driver installation, copying files, etc. is also available via a web interface, another first for a supervisory system. This means that remote service operations can be performed by authorised personnel without needing to travel on site, as is required with other supervisory systems.

604

Protocols and connectivity

For the first time ever on a CAREL supervisor, BOSS introduces the BACnet protocol, the leading protocol in HVAC supervision applications.

Integration of third party devices

This new feature significantly increases the possibility to integrate third party devices. The BACnet Master protocol is available in both MS/TP (RS485) and TCP/IP modes, and together with the Modbus RS485 and Modbus TCP/IP protocols, these too available on BOSS, offers the possibility to interact with the widest range of devices in the HVAC/R sector.

BMS integration

In addition to Master mode, the BACnet protocol is also available on BOSS in TCP/IP Slave mode, allowing BOSS to be integrated into a higher-level BMS, sharing the values of interest for overall building management (e.g. unit status, alarm status, ON/OFF controls,...)

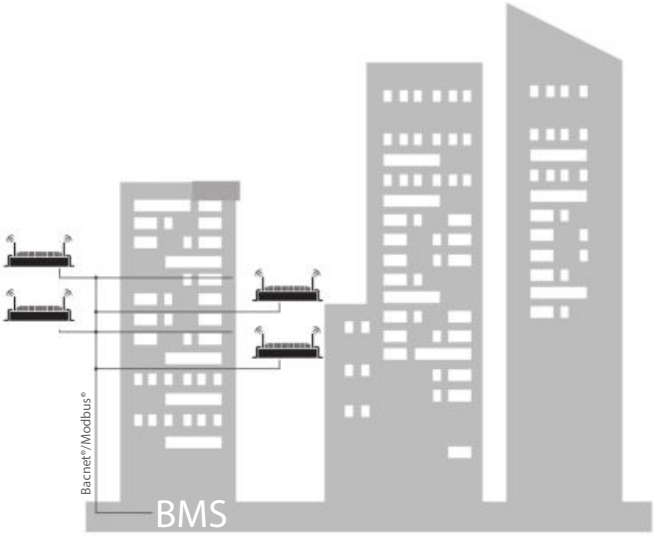

System optimisation functions

KPI

Performance index. Allows users to analyse the thermodynamic behaviour of the individual units connected to BOSS.

Energy

Consumption control and management. Allows users to monitor system energy consumption using graphs and reports.

Floating suction

Optimised suction pressure. This is used to optimise the compressor rack working set point, thus reducing power consumption.

Dew point broadcast

Share the dew point. To optimise activation of the anti-sweat heaters on the refrigeration units.

Safe restore

Safe compressor rack restart. This is used to manage safe and optimum compressor rack restart following a fault.

Parameter control

Supervisor parameter. This is used to monitor all fundamental parameter setting actions on the units connected to the supervisor.

Logical device / ground

Logical devices & logical variables. This is used to create new “virtual” variables and devices on BOSS.

Algorithm pro

Customised logic. This is used to create additional customised logic using the Java programming language.

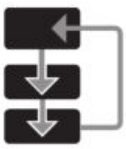

HVAC smart start

Optimised air-conditioning on/off. To optimise on/off and setpoint based on the ambient information acquired by BOSS.

Geo - lighting

Optimised management of lights based on outside light. Optimised switching on/off based on site latitude and longitude.

Smart high purge

Optimised free-cooling on HVAC units. The unit can be started before sunrise using calculations based on system enthalpy.

Customised graphics

User interfaces that can be customised according to the way in which information is managed by different users.

With the c.web tool, system status and the main variables relating to each controller can be represented using customised graphics.

Indeed c.web offers several powerful features, such as :

- the creation of vectorial images that can adapt to all screen sizes on both desktop and mobile devices without losing resolution;
- the possibility to develop customised animated widgets in just a few clicks;
- the reusability of graphic libraries developed for one project inside another.

The same hardware is suitable for all applications

The absence of an internal fan and heat dissipation ensured by a robust aluminium casing mean BOSS can be installed in many different environments, even industrial environments in which conditions are unfavourable.

Technical characteristics

■ Hardware characteristics:

- Power supply module: AC input: 100-240 V~; 1,5 A; 50-60 Hz - DC output: 12 Vcc 5,0 A max
- Power input: 1.5 A max
- BOSS power supply: 12VCC 2,8 A max
- Operating conditions: from 5 to 45 °C
- Storage conditions: from -20 to 65 °C
- Digital input: free contact, Vmax 5 V, Imax 11.5 mA, SELV as per EN60950-1
- 3 relay: 24 V max, 8A max, SELV as per EN60950-1
- Buzzer: Max 80 dB at 10 cm
- Serial ports: 2 RS485 master, 4KV isolated, SELV as per EN60950-1
- USB ports: 2 standard HOST ports with type A connector on front; 4 standard HOST ports with type A connector at rear
- Internal battery: CR2032 X memory CMOS
- Compliance: Directive 2014/35/EU (LVD) - Directive 2014/30/EU (EMCD) - Directive 2011/65/EU (RoHS). The system made up of BOSS and Carel temperature measuring devices compliant with EN13485 meets the requirements of EC regulation 37/2005 and specifically standard EN12830 on temperature recorders for the transport, storage and distribution of chilled, frozen, deep-frozen/quick-frozen food and ice cream (EN 12830, S, A, 1 or 2, range of measurement corresponding to the class of devices connected)
- Pollution degree: 2 as per EN60950-1
- Chassis material: Chassis made of SEEC (Steel, electro-galvanized, cold-rolled) top and lateral casing in anodized aluminium
- Dimensions: 340 x 77 x 145 mm

■ Software characteristics:

Software available in 14 languages with English remaining the second language for support.

CIAT machine variables available in 3 languages: Spanish, English and French (please consult us for other languages).

BOSS Supervision system allows CIAT units with the following control systems to be integrated into the supervision network: CIATrtc / AVANT / AVANT+ / CIATpool or Vectic.

The Vectic control can only be installed on a line with the ModBus protocol. The other control systems can be configured with the CAREL or ModBus protocols.

The devices included in the system have a factory configuration for alarm priorities, recording frequency and the main page presentation.

The units can be connected to two RS485 ports on the BOSS system. It is possible to have additional lines by using RS232 RS485 converters on the USB ports.

Four secure access levels are available:

- Administrator (highest level).
- Installer (level 3).
- Maintenance (level 2).
- End user (level 1).

The highest level gives access to all the available functions.

PLANTWATCH PRO3

Supervision for small installations

panel

wall

A huge range of functions on a small budget:

- *Remote control,*
- *Management of up to 30 units with a total of 300 variables,*
- *Colour LCD touch screen,*
- *Management of alarms,*
- *Creation of diagrams,*
- *Planner.*

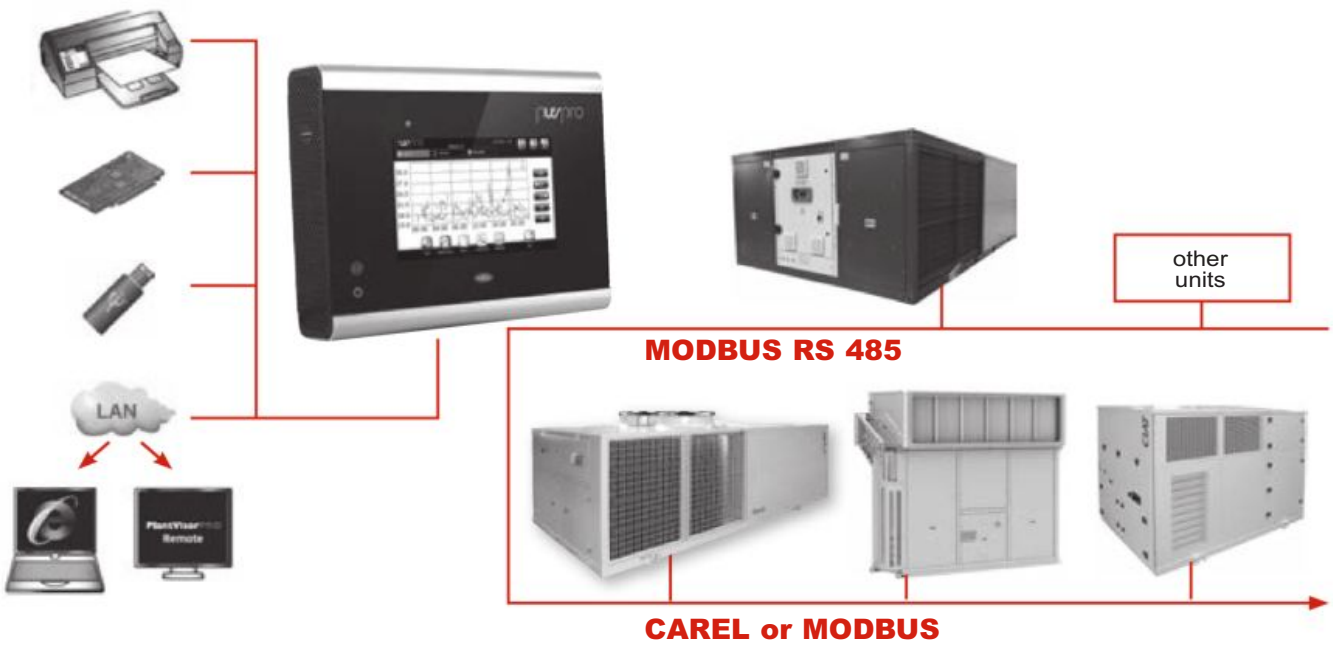

Use

Preinstalled on an integrated PC, **PLANTWATCH PRO3** is the solution for the management and supervision of small scale air conditioning installations. With a capacity to manage up to 30 units (ROOF TOP, AIRDUO, HCOMPACT, PAC XH heat pump…) with a maximum total of 300 management variables.

It takes charge of the monitoring and maintenance functions with a log of data stored up to one year, with a 15-minute sampling interval.

3 versions:
PlantWatch Pro3 panel (10 units)
PlantWatch Pro3 panel (30 units)
PlantWatch Pro3 wall (30 units)

Control for the machines which can be managed:
CIATrtc / AVANT / AVANT + / CIATpool, protocole Carel ou ModBus.
VECTIC, protocole ModBus.

Main functions available

Remote control:

It is possible to monitor a PLANTWATCH PRO3 via an internet connection or a remote connection. This function allows exactly what is being displayed on the PLANTWATCH PRO3 touch screen to be shown on the PC monitor. The entire control of the installation can be programmed via the web.

Management of units:

All the units forming the installation can be quickly configured, by assigning them to defined groups or zones. All the information can be accessed via summary pages on the installation or detailed pages for each item of equipment.

Management of alarms:

The system's active alarms can be displayed. Different priority levels can be defined. Each alarm event which occurs in the installation is logged, giving information on the type of alarm, and the start and end time/date.

Creation of diagrams:

PLANTWATCH PRO3 produces complete, detailed diagrams, with a maximum of 5 variables in each device. This is key for analysis and diagnostics in the event of a problem with the controlled variables.

Planner:

This is used to programme a series of actions according to the time/day.

Structure of the screens:

Technical description of PLANTWATCH PRO

Main characteristics :

- Wall version
  - Touch screen 7'' (800x480WVGA-65k colors)
  - 2 RS485 (Carel or Modbus protocol)
  - 1 USB Port (on the left side)
  - 1 SD Card Slot (for export and storing data)
  - 1 Network Card (2 Ethernet plug - SWITCH)
  - 1 Buzzer
  - Power supply 24Vac
  - 1 External Power Transformer: IN 110 240, OUT 24Vac
  - 2 Built in relay on board
  - 2 Status Led on the front (Alarms and Power status)
  - Ingress protection IP65 (front), IP20 (rear)
  - Mounting application: Technical room, office room

- Panel version
  - Touch screen 7'' (800x480WVGA-65k colors)
  - 2 RS485 (Carel or Modbus protocol)
  - 1 USB Port (on the left side)
  - 1 SD Card Slot (for export and storing data)
  - 1 Network Card (2 Ethernet plug - SWITCH)
  - 1 Buzzer
  - Power supply 24Vac
  - Ingress protection IP10
  - Mounting application: e-box (electrical box), rack door, different technical enviroments

Software characteristics:

Software available in 14 languages: English remains the second language for support. CIAT machine variables available in 3 languages: Spanish, English and French.
CIAT PLANTWATCH PRO supports Carel or ModBus protocols on RS485 bus.
Supervision of CIAT controls: AVANT, AVANT+, can be connected to a WM14-DIN electrical energy meter.
The devices included in the system have a factory configuration for alarm priorities, recording frequency and the main page presentation.
The units can be connected on 2 lines on the CIAT PLANTWATCH PRO3's two RS485 ports.

Humid air diagram

w	*(kg/kg)*	Absolute humidity, mass of humidity per unit mass of dry air.
t	*(°C)*	Dry temperature of humid air.
ε	*(%)*	Relative humidity.
tr	*(°C)*	Dew point T°.
q'	*(kJ/kg)*	Enthalpy of humid air containing the unit mass of dry air.
t'	*(°C)*	Wet temperature.
v'	*(m^3/kg)*	Volume of humid air containing the unit mass of dry air.
γ $= \frac{\Delta q'}{\Delta w}$	*(en kJ/kg)*	Variation rate of q' over the variation of w.

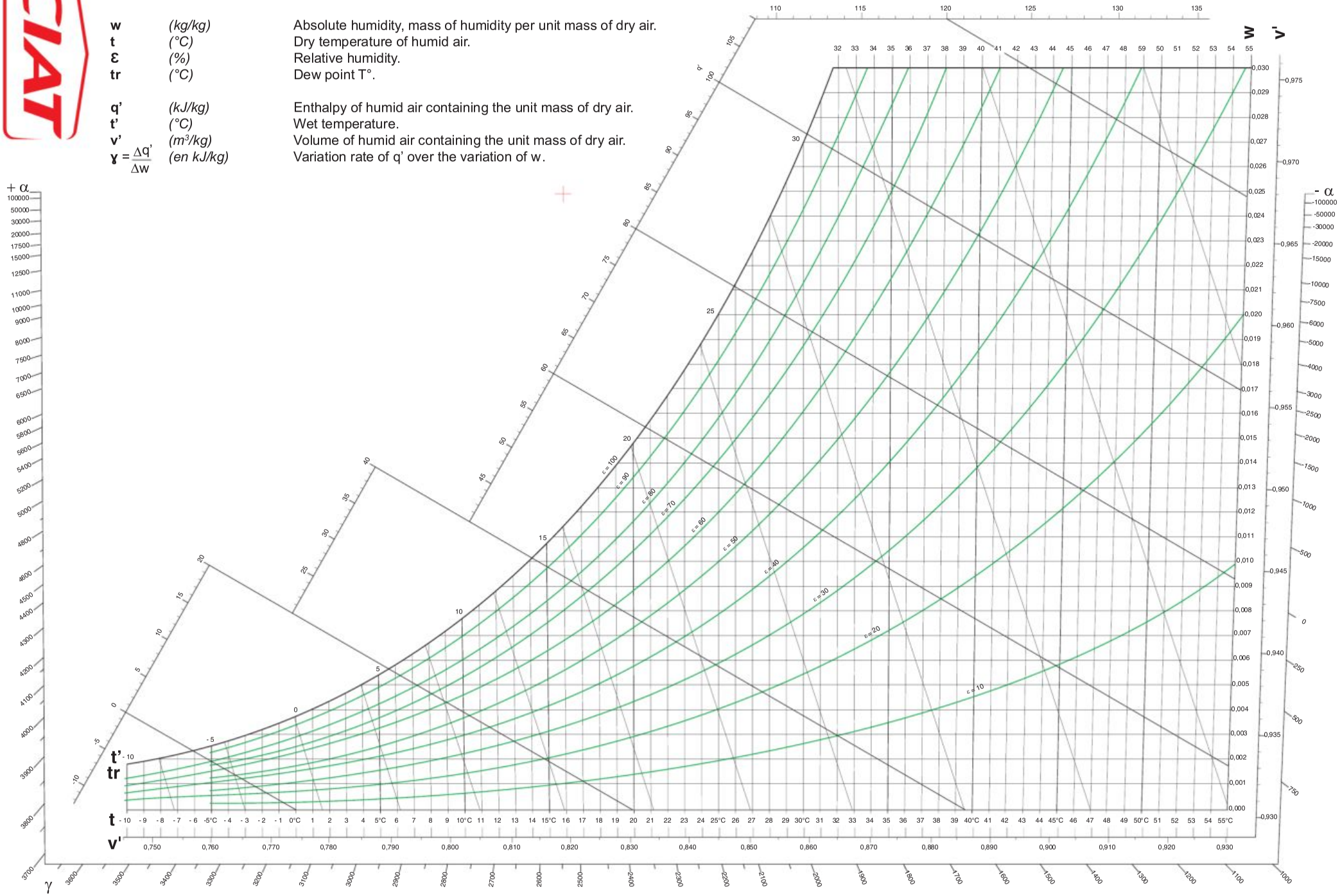

www.ciat.com

The materials and information referenced in this brochure are for informational purposes only and not for the purpose of providing legal or other professional advice. © CIAT 2019.
All rights reserved. CIAT reserves the right to change certain information and specifications contained in this document at any time and without prior notice.
CATALOGUE GENERALE- July 2019
Ref.: General Catalogue - NA 19.01A
Photos : CIAT, istock, Fotolia